SONY

RECORDER UNIT

DNV-5

DIGITAL CAMCORDER

DNW-7/7P
DNW-90/90P
DNW-90WS/90WSP

BETACAM SX

MAINTENANCE MANUAL Part 2

Volume 2 1st Edition

⚠警告

このマニュアルは，サービス専用です。
お客様が，このマニュアルに記載された設置や保守，点検，修理など行うと感電や火災，人身事故につながることがあります。
危険をさけるため，サービストレーニングを受けた技術者のみご使用ください。

⚠WARNING

This manual is intended for qualified service personnel only.
To reduce the risk of electric shock, fire or injury, do not perform any servicing other than that contained in the operating instructions unless you are qualified to do so. Refer all servicing to qualified service personnel.

⚠WARNUNG

Die Anleitung ist nur für qualifiziertes Fachpersonal bestimmt.
Alle Wartungsarbeiten dürfen nur von qualifiziertem Fachpersonal ausgeführt werden. Um die Gefahr eines elektrischen Schlages, Feuergefahr und Verletzungen zu vermeiden, sind bei Wartungsarbeiten strikt die Angaben in der Anleitung zu befolgen. Andere als die angegeben Wartungsarbeiten dürfen nur von Personen ausgeführt werden, die eine spezielle Befähigung dazu besitzen.

⚠ AVERTISSEMENT

Ce manual est destiné uniquement aux personnes compétentes en charge de l'entretien. Afin de réduire les risques de décharge électrique, d'incendie ou de blessure n'effectuer que les réparations indiquées dans le mode d'emploi à moins d'être qualifié pour en effectuer d'autres. Pour toute réparation faire appel à une personne compétente uniquement.

DNV-5 (Except J)	Serial No. 10001 and Higher
DNV-5 (J)	Serial No. 30001 and Higher
DNW-7 (Except J)	Serial No. 10001 and Higher
DNW-7 (J)	Serial No. 30001 and Higher
DNW-7P	Serial No. 40001 and Higher
DNW-90 (Except J)	Serial No. 10001 and Higher
DNW-90 (J)	Serial No. 30001 and Higher
DNW-90P	Serial No. 40001 and Higher
DNW-90WS(Except J)	Serial No. 10001 and Higher
DNW-90WS (J)	Serial No. 30001 and Higher
DNW-90WSP	Serial No. 40001 and Higher

Voor de klanten in Nederland

Dit apparaat bevat een MnO_2-Li batterij voor memory back-up.

Raadpleeg uw leverancier over de verwijdering van de batterij op het moment dat u het apparaat bij einde levensduur afdankt.

Gooi de batterij niet weg. maar lever hem in als KCA.

Bij dit produkt zijn batterijen geleverd. Wanneer deze leeg zijn, moet u ze niet weggooien maar inleveren als KCA.

Table of Contents

Manual Structure

Purpose of this manual ..... 5 (E)
Contents ..... 5 (E)
Relative manual ..... 6 (E)

1. Spare Parts

1-1. Notes on Spare Parts 1-1
1-2. Exploded Views 1-2
1-2-1. Mechanical Deck 1-2
1-2-2. DNV-5 1-14
1-2-3. DNW-7/7P/90/90P/90WS/90WSP 1-22
1-2-4. Tripad Adaptor (For J except DNV-5) 1-34
1-3. Electrical Parts List 1-35
1-4. Supplied Accessories 1-116

2. Semiconductor Pin Assignments

3. Block Diagrams

OVERALL (DNW-7/90/90WS) 3-4
OVERALL (DNV-5) 3-6
DVP-1/2 3-7
DCP-1, ES-11 3-8
TC-80 3-10
IF-634, CT-187 3-12
MDC-5 3-13
POWER BLOCK 3-14
CCD BLOCK 3-15

4. Board Layouts

CT-187 4-4
CN-1193 4-5
DCP-1 4-6
DVP-1 4-8
DVP-2 4-10
IF-634 4-12
ES-11 4-14
TC-80 4-16
MDC-5 4-18
HN-224, MDR-1, PA-203 4-20
AIF-8, MA-68, SW-789 4-21
DC-87, PS-390 4-22
RE-118, RE-119 4-23
AL-40, CT-185, AXM-14, CNB-1 4-24
IO-117, CO-22, CI-12, HP-70 4-25
KY-293, LP-86, LP-102 PSW-33, PSW-55, RX-26, SW-780 4-26
SW-808, SW-823, SW-873, SW-882 4-27
MB-627 4-28
CN-1183, BI-96 4-29
DR-291, PA-186 4-30
VA-167, TG-161 4-31

5. Schematic Diagrams

CT-187 5-4
DCP-1 5-6
CN-1193 5-19
DVP-1 5-20
DVP-2 5-34
ES-11 5-46
IF-634 5-50
PA-203 5-59
RC-61 5-60
TC-80 (DNV-5) 5-62
TC-80 (DNW-7/90/90WS) 5-72
HN-224 5-81
MDC-5 5-82
MDR-1 5-86
AIF-8 5-87
MA-68 5-88
DC-87, PS-390 5-89

http://getMANUAL.com

RE-118 (DNV-5) 5-90
RE-118 (DNW-7/90/90WS) 5-92
RE-119 (DNV-5) 5-94
RE-119 (DNW-7/90/90WS) 5-96
AL-40, CT-185 5-98
AXM-14 5-99
CNB-1 (DNV-5) 5-100
CNB-1 (DNW-7/90/90WS) 5-104
IO-117 5-107
CI-12 5-108
RX-26, SW-780 5-109
MB-627 (DNV-5) 5-110
MB-627 (DNW-7/90/90WS) 5-114
CN-1183 5-118
BI-96 5-119
DR-291 5-120
PA-186 5-122
VA-167 5-124
TG-161 5-126
TG-164 5-128
FRAME (DNV-5) 5-130
FRAME (DNW-7/90/90WS) 5-134

Manual Structure

Purpose of this manual

This manual is maintenance manual of Recorder Unit DNV-5 and Digital Camcorder DNW-7/7P/90/90P/90WS/90WSP.
This manual describes the information items (block diagrams, board layouts, schematic diagrams, detailed parts list, etc.) that premise the service based on the components parts.

Contents

The following is a summary of the sections for understanding the contents of this manual.

Maintenance Manual Part 2 Volume 2

Section 1 Spare Parts
Describes the exploded views for the mechanical parts, and the electrical parts list in this unit.

Section 2 Semiconductor Pin Assignments
Describes the pin assignments, and the function explanation used in this unit.

Section 3 Block Diagrams
Describes the overall block diagrams, and the block diagrams for every circuit board.

Section 4 Board Layouts
Describes the board layouts.

Section 5 Schematic Diagrams
Describes the schematic diagrams.

Maintenance Manual Part 2 Volume 1

Section 1 Service Overview
Section 2 Maintenance Mode
Section 3 Replacements of Mechanical Parts
Section 4 Mechanical Alignment
Section 5 Replacement of Circuit Boards
Section 6 General Information for Electrical Alignment
Section 7 VTR System Alignment
Section 8 Camera System Alignment
Section 9 Camera System Alignment (For DNW-90WS/90WSP)

Relative manual

Besides this “Maintenance Manual Part 1”, the following manuals are available for this unit.

- **Operation Manual (Supplied with this unit.)**
  This manual is necessary for application and operation of this unit.

- **Maintenance Manual Part 2 (Not supplied with this unit.)**
  This manual describes the information items (adjustments, board layouts, schematic diagrams, detailed parts list, etc.) that premise the service based on parts. If this manual is required, please contact Sony’s service organization.

- **BVF-V10/V10CE or BVF-V20W/V20WCE Maintenance Manual (Not supplied with this unit.)**
  This manual describes the service information of the viewfinder.
  If this manual is required, please contact Sony’s service organization.

Section 1
Spare Parts

1-1. Notes on Spare Parts

1. Safety Related Components Warning

Components marked ⚠ are critical to safe operation. Therefore, specified parts should be used in the case of replacement.

2. Standardization of Parts

Some spare parts supplied by Sony differ from those used for the unit. These are because of parts commonality and improvement.

Parts list has the present standardized repair parts.

3. Stock of Parts

Parts marked with “o” at SP(Supply Code) column of the spare parts list may be not stocked. Therefore, the delivery date will be delayed.

4. Units Representation

The following represented units are changed or omitted in writing.

Units		Representation
Capacitance	μF	uF
Inductance	μH	uH
Resistance	Ω	Abbreviation
Temperature	˚C	XXX-DEG-C

5. Destination Representation

The part indicated “For J/UC/EK” in the spare parts list is used in the unit written below.

For UC : Serial No. 10001 and higher
For J : Serial No. 30001 and higher
For EK : Serial No. 40001 and higher

1-2. Exploded Views

1-2-1. Mechanical Deck

No.	Part No.	SP	Description
1	A-8278-249-D	s	IDLER ASSY,S
2	A-8278-355-B	o	TENSION REGURATOR ASSY
3	A-8278-359-B	o	ARM ASSY,THREADING
4	A-8278-364-C	o	SLIDER ASSY,S
5	X-3678-091-3	s	ROLLER ASSY
6	X-3678-599-1	o	LINK ASSY,S
7	X-3678-661-2	o	PLATE ASSY,S
8	X-3678-664-2	o	GEAR ASSY,S
9	X-3678-674-1	o	HOLDER ASSY,BEARING
10	X-3678-681-1	o	DRAWER ASSY,S LINK
11	X-3678-682-2	o	LINK ASSY,TENSION REGULATOR
12	X-3678-683-1	s	TEN-REGI BAND ASSY
13	X-3678-688-1	o	ARM ASSY,TEN-REG BAND
14	X-3678-699-1	o	BASE ASSY,REEL
15	X-3678-952-1	o	PLATE ASSY,ADJUSTMENT
16	X-3678-957-2	s	BREAKE ASSY,S SOFT
17	1-956-439-11	o	HARNESS, TAPE SENSOR
18	2-279-715-11	s	RIVET, NYLON
19	2-640-315-01	o	SCREW (M2X5), SMALL, +P, SW
20	3-303-961-01	s	WASHER, POLY
21	3-303-961-11	s	WASHER, POLY
22	3-543-985-11	s	SPRING, TENSION
23	3-559-408-11	s	WASHER, POLYETHYLENE, DIA.1.2
24	3-603-541-01	o	RAIL,S
25	3-603-575-01	s	SPRING S ARM
26	3-603-581-01	o	SENSER,FULL TOP
27	3-603-595-01	o	GUARD S
28	3-603-619-01	s	SPRING,EXTENSION
29	3-603-632-01	o	GEAR,CAM SUB
30	3-603-638-01	s	FLANGE,UPPER
31	3-603-662-02	o	STOPPER,CASSETTE
32	3-603-691-01	o	GEAR,MIDWAY
33	3-669-465-01	s	WASHER (1.5), STOPPER
34	3-680-230-01	s	FLANGE,UNDER
35	3-729-011-01	s	SPRING, COMPRESSION
36	3-729-013-41	s	SCREW(M1.4X3.5),WASHERHEAD(+P)
37	3-729-084-41	s	BOLT (M2X8), HEXAGON HOLE

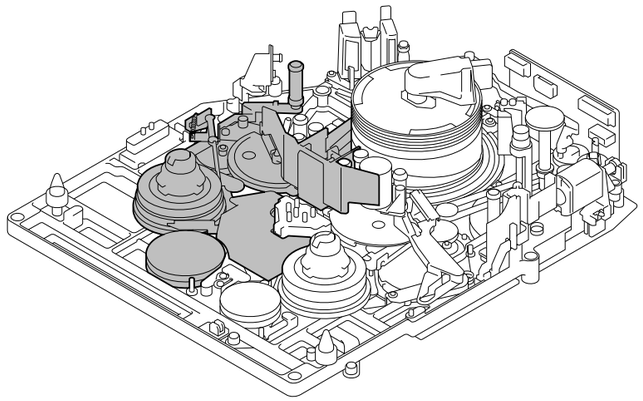

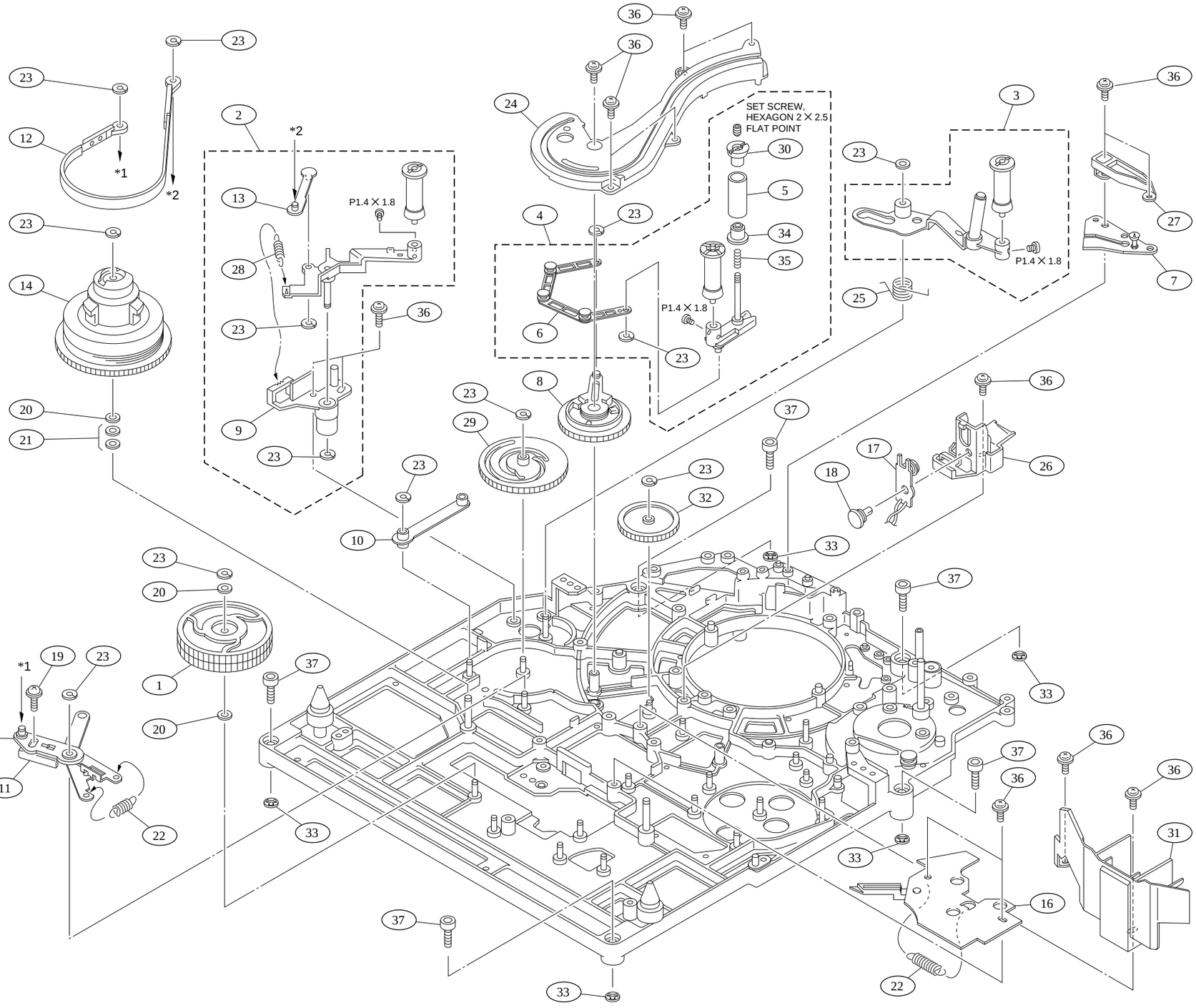
SET SCREW, HEXAGON 2 X 2.5 FLAT POINT
P1.4 X 1.8
P1.4 X 1.8
P1.4 X 1.8
*1
*2
*1
*2

T Side Reel Chassis

No.	Part No.	SP	Description
101	A-8278-352-A	s	IDLER ASSY,T
102	A-8278-363-C	o	SLIDER ASSY,T
103	A-8278-365-B	s	GEAR ASSY,REEL DRIVE
104	X-3678-066-1	s	PULLEY ASSY,RELAY
105	X-3678-091-3	s	ROLLER ASSY
106	X-3678-662-1	o	LINK ASSY,T
107	X-3678-663-2	o	PLATE ASSY,T
108	X-3678-665-2	o	GEAR ASSY,T
109	X-3678-668-1	o	LINK ASSY,F
110	X-3678-671-4	o	ARM ASSY,PINCH
111	X-3678-676-1	o	GEAR ASSY,CAM
112	X-3678-678-2	o	LINK ASSY,BRAKE
113	X-3678-691-1	o	BRAKE ASSY,T
114	X-3678-699-1	o	BASE ASSY,REEL
115	X-3678-926-1	s	PINCH ROLLER ASSY
116	2-640-056-11	s	SEAM
117	3-303-961-01	s	WASHER, POLY
118	3-303-961-11	s	WASHER, POLY
119	3-368-441-01	s	SPRING (SLIDER S), TENSION
120	3-371-876-01	s	SPRING, EXTENSION
121	3-378-792-01	s	SPRING, COMPRESSION
122	3-534-274-99	s	SPRING, TENSION
123	3-542-649-00	s	SPRING, TENSION
124	3-559-408-11	s	WASHER, POLYETHYLENE, DIA.1.2
125	3-603-549-01	o	RAIL,T
126	3-603-577-01	o	GEAR,PULLEY(B)
127	3-603-578-01	o	GEAR(C)
128	3-603-584-01	o	GEAR(D)
129	3-603-591-01	o	GEAR,INTERMITTENT
130	3-603-601-02	o	ARM,T-BRAKE
131	3-603-602-01	o	GUARD T
132	3-603-604-01	o	LINK,PRESS
133	3-603-611-02	o	ARM,DRAWER
134	3-603-616-01	s	SPRING,TORSION
135	3-603-634-01	s	SPRING,COMPRESSION,TORSION
136	3-603-638-01	s	FLANGE,UPPER
137	3-603-691-01	o	GEAR,MIDWAY
138	3-605-851-01	s	FLANGE,UNDER
139	3-679-729-02	s	FLANGE,UPPER
140	3-680-230-01	s	FLANGE,UNDER
141	3-729-011-01	s	SPRING, COMPRESSION
142	3-729-013-41	s	SCREW(M1.4X3.5),WASHERHEAD(+P)

1-4

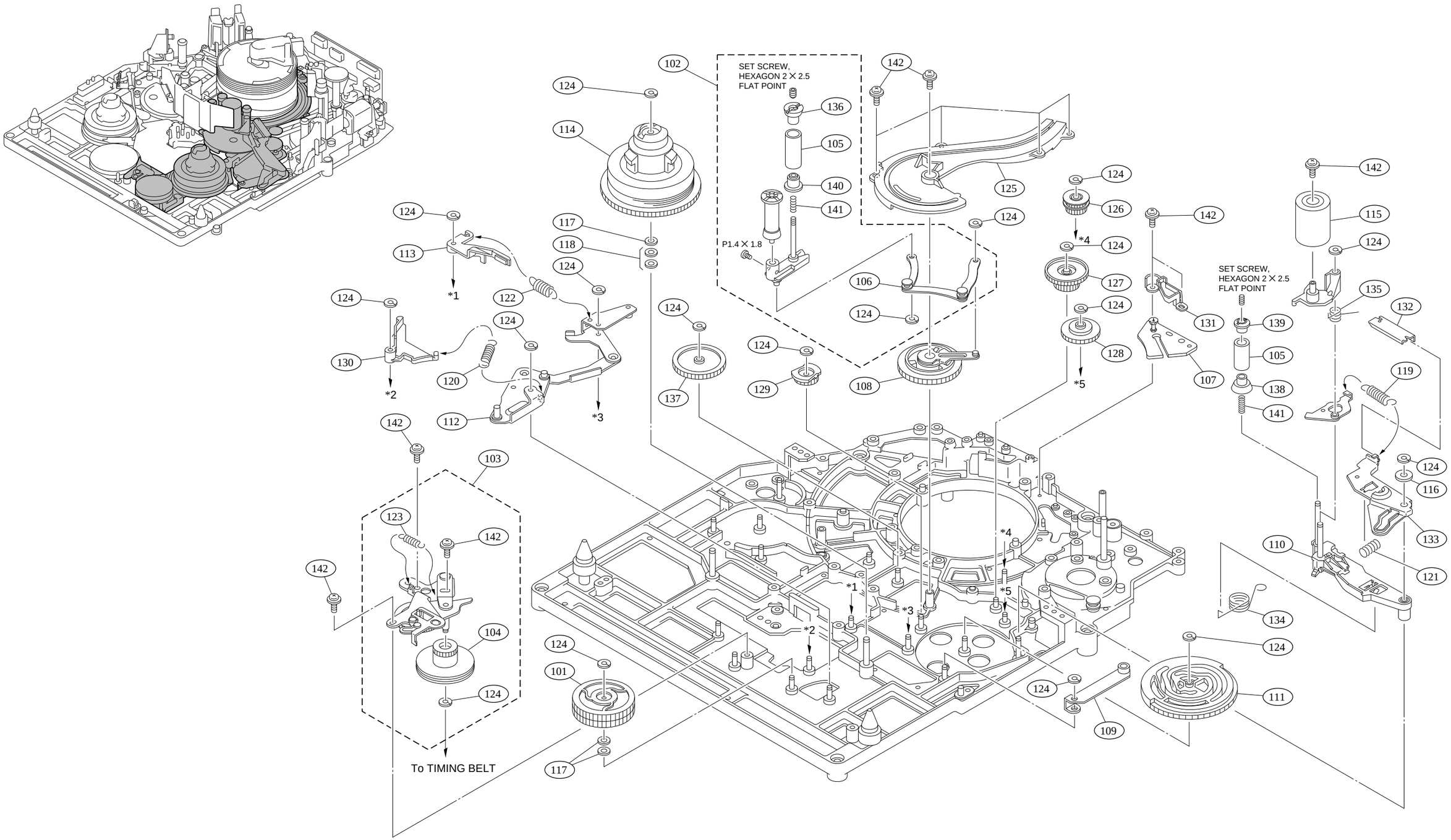
SET SCREW,
HEXAGON 2 × 2.5
FLAT POINT
P1.4 × 1.8
SET SCREW,
HEXAGON 2 × 2.5
FLAT POINT
To TIMING BELT
102
124
114
136
105
140
141
142
125
126
*4
127
128
*5
131
107
115
135
132
139
138
119
116
133
110
121
134
111
109
113
*1
117
118
122
130
*2
120
112
*3
137
129
106
108
103
123
104
101

No.	Part No.	SP	Description
201	A-8311-292-A	s	RING ASSY (RP), SLIP
202	A-8311-293-A	s	BRUSH ASSY (RP)
203	A-8311-298-A	s	DRUM ASSY (DJH-15A-R)
204	A-8311-299-A	s	UPPER DRUM ASSY (DJR-15-R)
205	3-703-502-32	s	SCREW 1.4X3
206	3-729-012-01	s	SCREW (M2X5)

http://getMANUAL.com

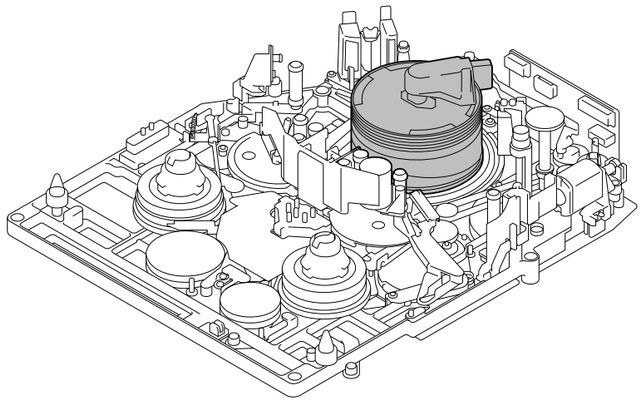

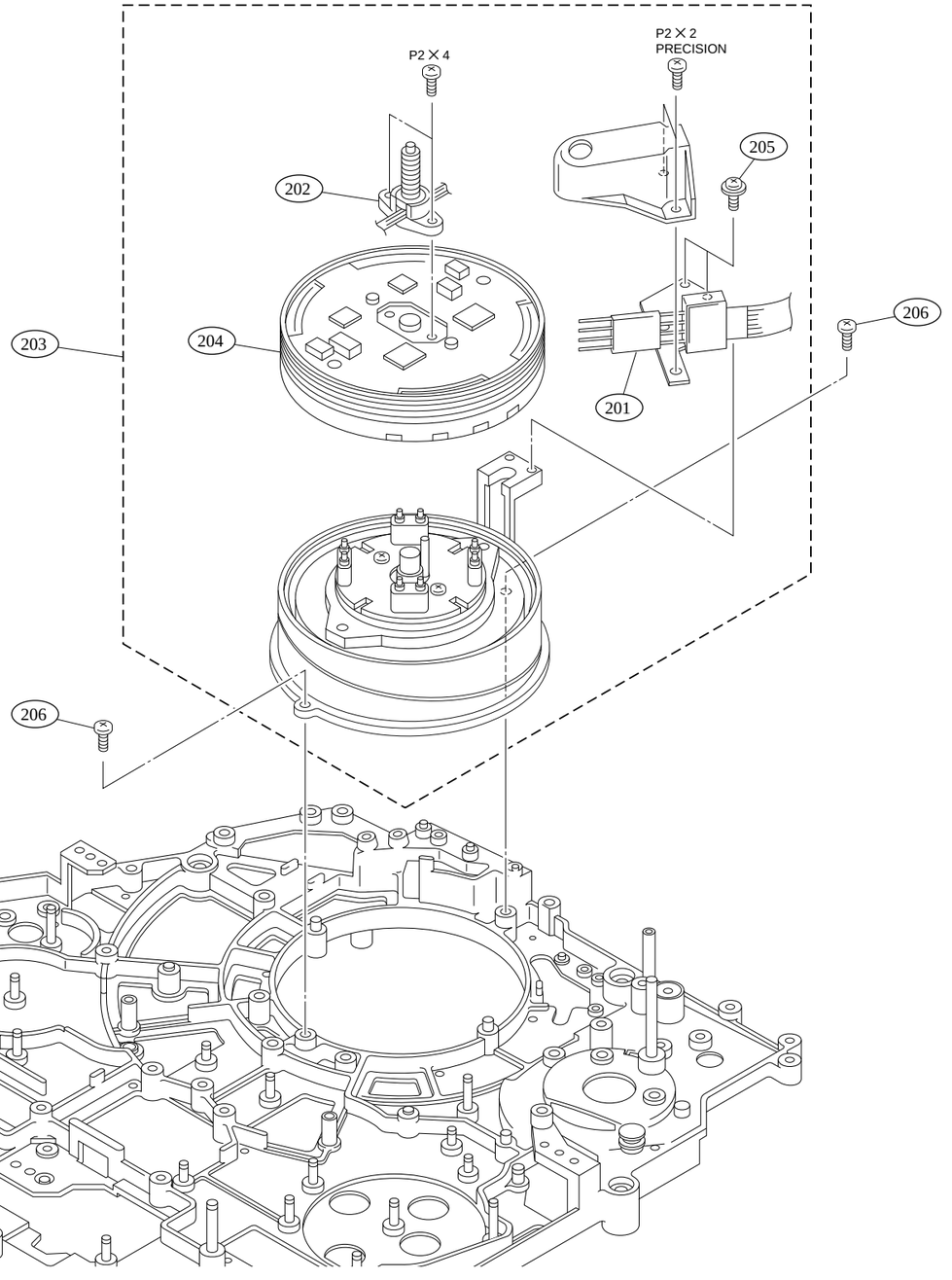

Mechanical Deck Block (Upper)

No.	Part No.	SP	Description
301	A-8277-530-A	o	MOUNTED CIRCUIT BOARD, HN-224
302	A-8278-362-B	o	GEAR BLOCK ASSY
303	A-8278-366-B	s	VH CLEANER ASSY
304	X-3167-281-3	s	ROLLER ASSY, V CLEANING
305	X-3678-142-1	o	CLEANER ASSY,TAPE
306	X-3678-666-1	o	BASE ASSY,MOTOR
307	X-3678-673-1	o	PLATE ASSY,HEAD TC
308	1-698-003-11	o	MOTOR, DC (SHREADING)
309	1-956-439-11	o	HARNESS, TAPE SENSOR
310	2-279-715-11	s	RIVET, NYLON
311	3-182-765-02	s	SPACER, CR
312	3-328-694-01	s	SPRING, TENSION
313	3-559-408-11	s	WASHER, POLYETHYLENE, DIA.1.2
314	3-603-566-01	o	BRACKET HN
315	3-603-567-02	o	ARM,TC
316	3-603-570-01	o	GEAR,WORM
317	3-603-571-01	o	WHEEL,WORM
318	3-603-582-01	o	JOINT
319	3-603-615-02	s	SPRING,COIL,HEAD
320	3-603-624-01	s	GEAR,EJECT,MANUAL
321	3-603-625-01	o	GEAR,IDLER
322	3-603-635-01	o	HOLDER,TOP SENSOR
323	3-603-636-01	o	HOLDER,END SENSOR
324	3-603-637-01	o	BELT,TIMING
325	3-603-643-02	o	DRIVE M
326	3-603-664-01	o	ARM,CTL
327	3-603-665-02	o	PLATE,SUPPORT
328	3-603-667-01	o	STOPPER
329	3-603-672-01	o	SPACER TAPER
330	3-603-678-01	s	SPRING,COMPRESSION
331	3-603-768-01	o	GEAR,PULLEY(A)
332	3-605-767-02	o	STOPPER,S ARM
333	3-698-829-01	s	NUT (M2)
334	3-701-436-11	S	WASHER, 1.6 POLYETHYLENE
335	3-729-012-01	s	SCREW (M2X5)
336	3-729-013-41	s	SCREW(M1.4X3.5),WASHERHEAD(+P)
337	3-729-076-01	s	SCREW (+B) (2X3)
338	3-962-914-01	s	SCREW (M1.4X2)
339	4-866-652-00	s	SPRING, COMPRESSION
340	8-825-770-74	s	HEAD, FE EF291-21
341	8-825-779-61	s	HEAD, AU PS244-2103L
342	8-825-779-71	s	HEAD, CTL PS244-21D

1-8

Mechanical Deck Block (Upper)

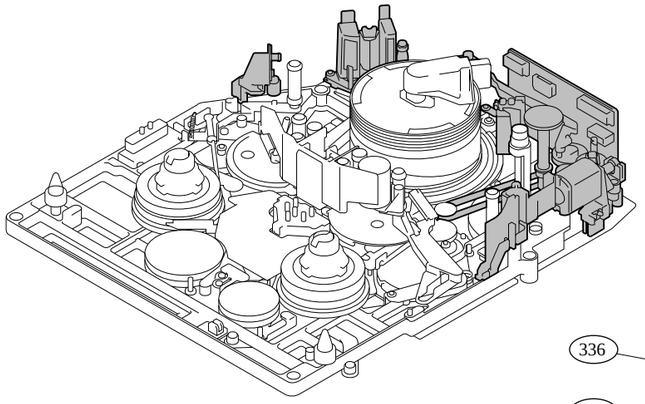

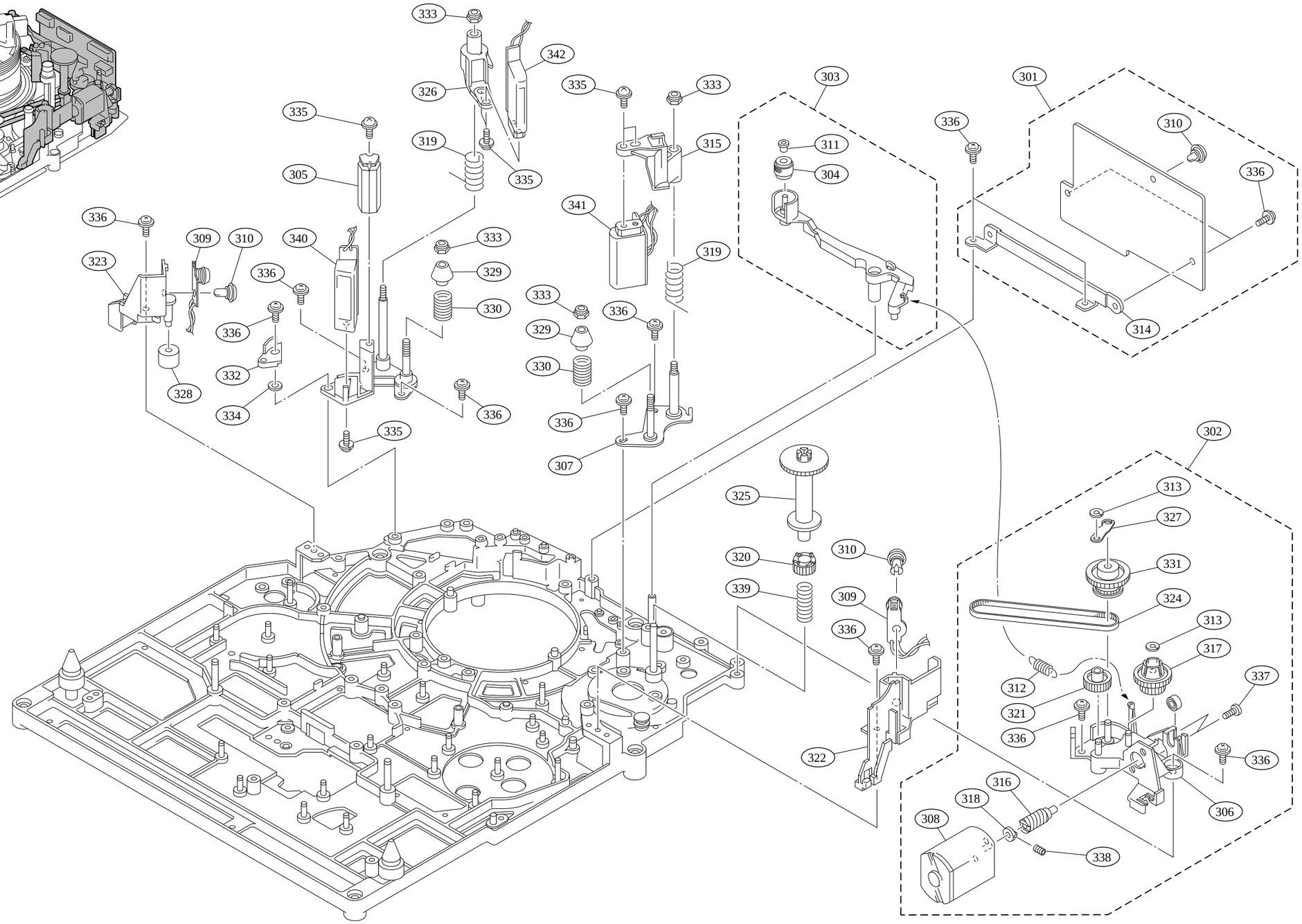

1-9

Mechanical Deck Block (Lower)

No.	Part No.	SP	Description
401	A-8277-536-A	o	MOUNTED CIRCUIT BOARD, MDC-5
402	X-3678-698-1	o	ARM ASSY,JOINT
403	X-3679-090-1	o	PIN ASSY,DETECTION
404	1-662-314-11	o	PRINTED CITCUIT BOARD, MDR-1
405	3-603-683-02	o	HOLDER,SENSOR(A)
406	3-603-701-02	o	HOLDER,SENSEOR(B)
407	3-605-769-01	o	WASHER,MDR
408	3-679-723-01	s	BELT,TIMING
409	3-729-012-01	s	SCREW (M2X5)
410	3-729-013-41	s	SCREW(M1.4X3.5),WASHERHEAD(+P)
411	8-835-553-01	s	MOTOR, DC (CAPSTAN)

1-10

Mechanical Deck Block (Lower)

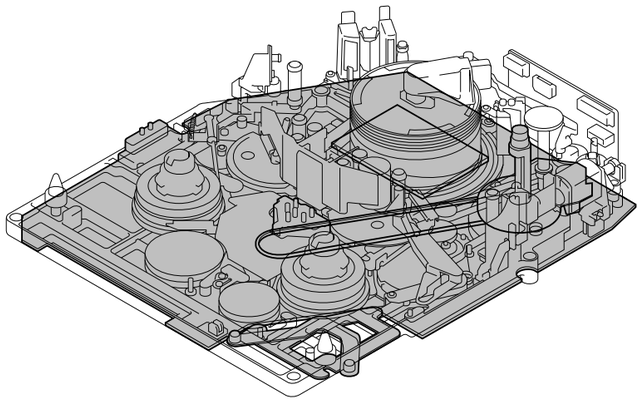

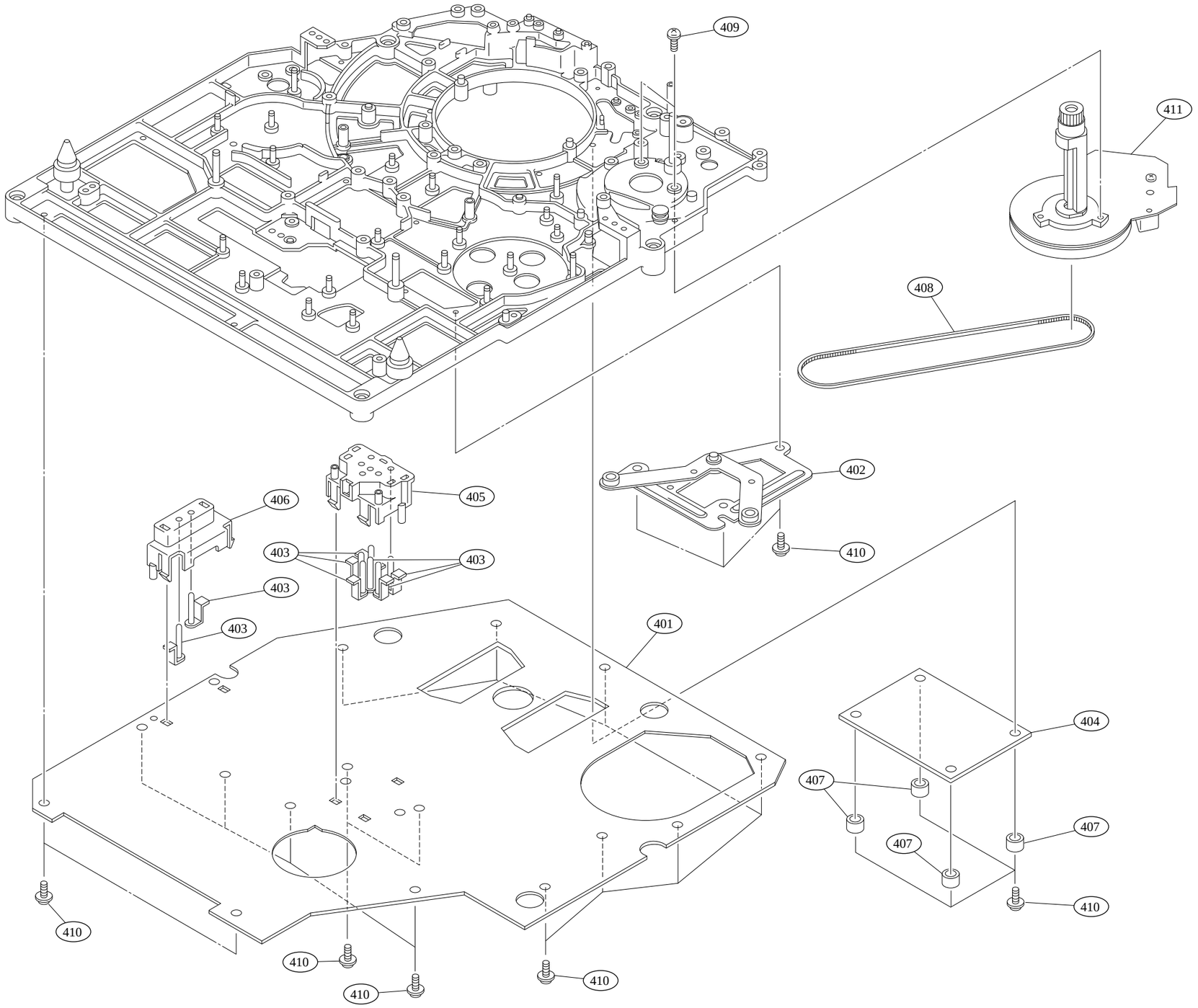

1-11

No.	Part No.	SP	Description
501	A-8311-049-B	s	COMPARTMENT ASSY, CASSETTE
502	X-3678-080-3	o	ARM(L) ASSY,LID
503	3-319-686-01	s	SPRING, TENSION
504	3-329-998-01	s	SPRING, TENSION
505	3-343-503-01	s	SPRING, TENSION
506	3-571-829-00	s	SPRING, TENSION
507	3-680-032-01	o	ROLLER(A)
508	3-680-081-01	o	ROLLER(B)
509	3-680-258-01	o	ROLLER STOPPER
510	3-680-995-01	o	SPRING,EXTENSION
511	3-686-886-01	s	SPRING, TENSION
512	3-729-013-21	s	SCREW(M1.4X2.5),WASHERHEAD(+P)

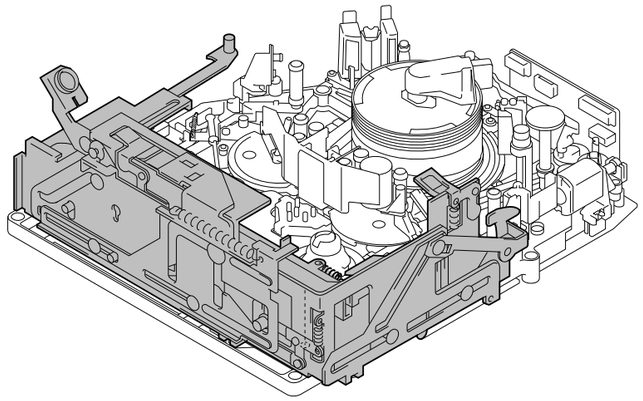

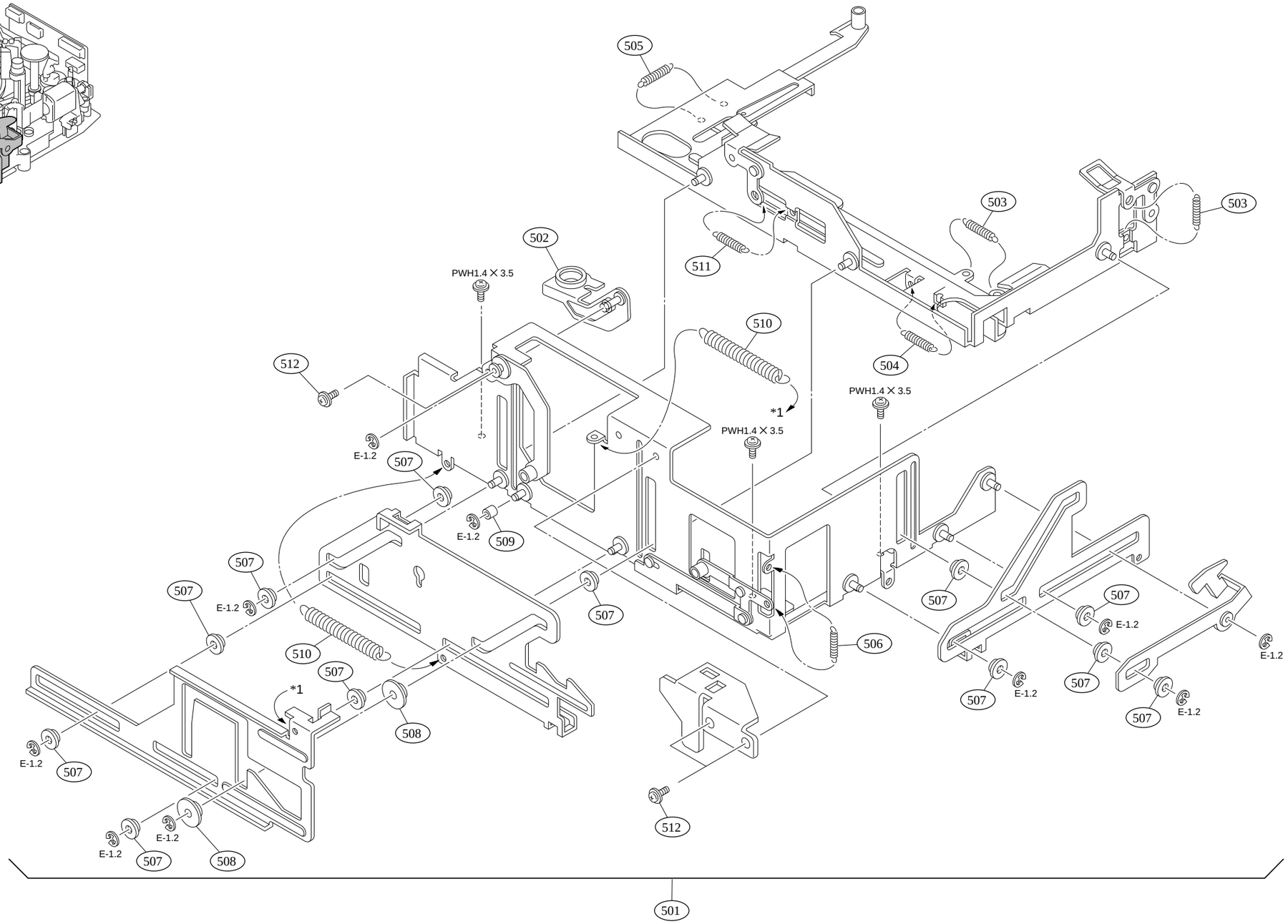
505
503
503
502
511
PWH1.4 × 3.5
510
504
512
*1
PWH1.4 × 3.5
PWH1.4 × 3.5
E-1.2
507
E-1.2
509
507
507
E-1.2
507
507
507
E-1.2
E-1.2
506
510
507
*1
508
507
E-1.2
507
E-1.2
507
E-1.2
E-1.2
507
508
512
501

1-2-2. DNV-5

No.	Part No.	SP	Description
601	A-8278-406-A	o	BASE ASSY,HANDLE
602	A-8311-257-A	o	MOUNTED CIRCUIT BOARD, PA-203
603	X-3678-567-1	o	SUSPENSION ASSY
604	X-3678-741-1	o	FRAME SUB(A)ASSY,FRONT
605	X-3678-742-3	o	HANDLE SUB ASSY
606	1-563-907-11	s	HOUSING, CONNECTOR (D02 F) 50P
607	1-662-475-11	o	PRINTED CIRCUIT BOARD, LP-102
608	1-956-532-12	o	HARNESS, 50 PIN CN
609	3-178-489-01	s	RUBBER, SHIELD
610	3-190-628-01	s	TUBE,SHIELD
611	3-603-707-01	o	PLATE,BLIND(WRR)
612	3-603-733-01	s	HOLDER,SCREW
613	3-604-468-01	o	CUSHION(50P),DROP PROTECTION
614	3-604-469-01	o	CUSHION(FRONT),DROP PROTECTION
615	3-604-474-01	o	STOPPER HERNESS(F)
616	3-604-480-01	s	+B4X12, ALOCK
617	3-676-125-00	o	PIN, STOPPER
618	3-676-349-00	o	SHOE, V
619	3-676-352-00	s	CAP, C HOLDER
620	3-676-365-04	o	HOLDER, V CONNECTOR
621	3-676-369-00	o	NUT, SPACER
622	3-676-370-00	s	PIN, HOLDER, CN
623	3-676-371-00	o	NUT (S), PLATE
624	3-679-646-03	o	BRACKET,TALLY
625	3-679-672-01	s	PACKING TALLY
626	3-682-495-02	s	PACKING TALLY
627	3-687-116-01	o	WASHER (4), STOPPER
628	3-689-039-11	s	SCREW (M2X6), SMALL
629	3-694-181-01	s	+P2.6X5,TYPE1,AROCK PRECISION
630	3-701-440-11	s	WASHER, 3.5
631	3-717-914-01	s	SCREW, DOCKING
632	3-725-260-04	s	GRIP, RUBBER
633	3-729-061-01	s	SCREW (M2X4.5) (TYPE 1)
634	3-742-004-01	s	RING, NYLON
635	3-742-074-11	s	SCREW (+B 3X8)
636	3-898-426-01	s	PACKING, RUBBER

Top and Front Frame

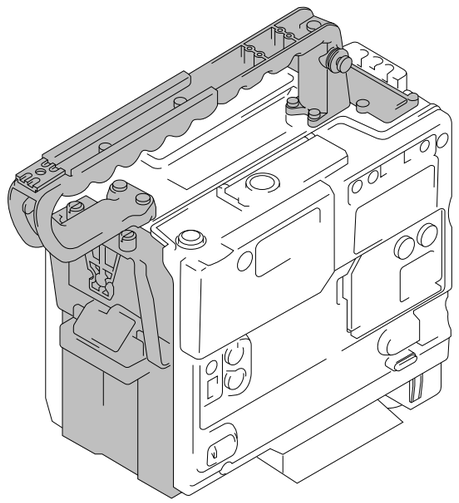

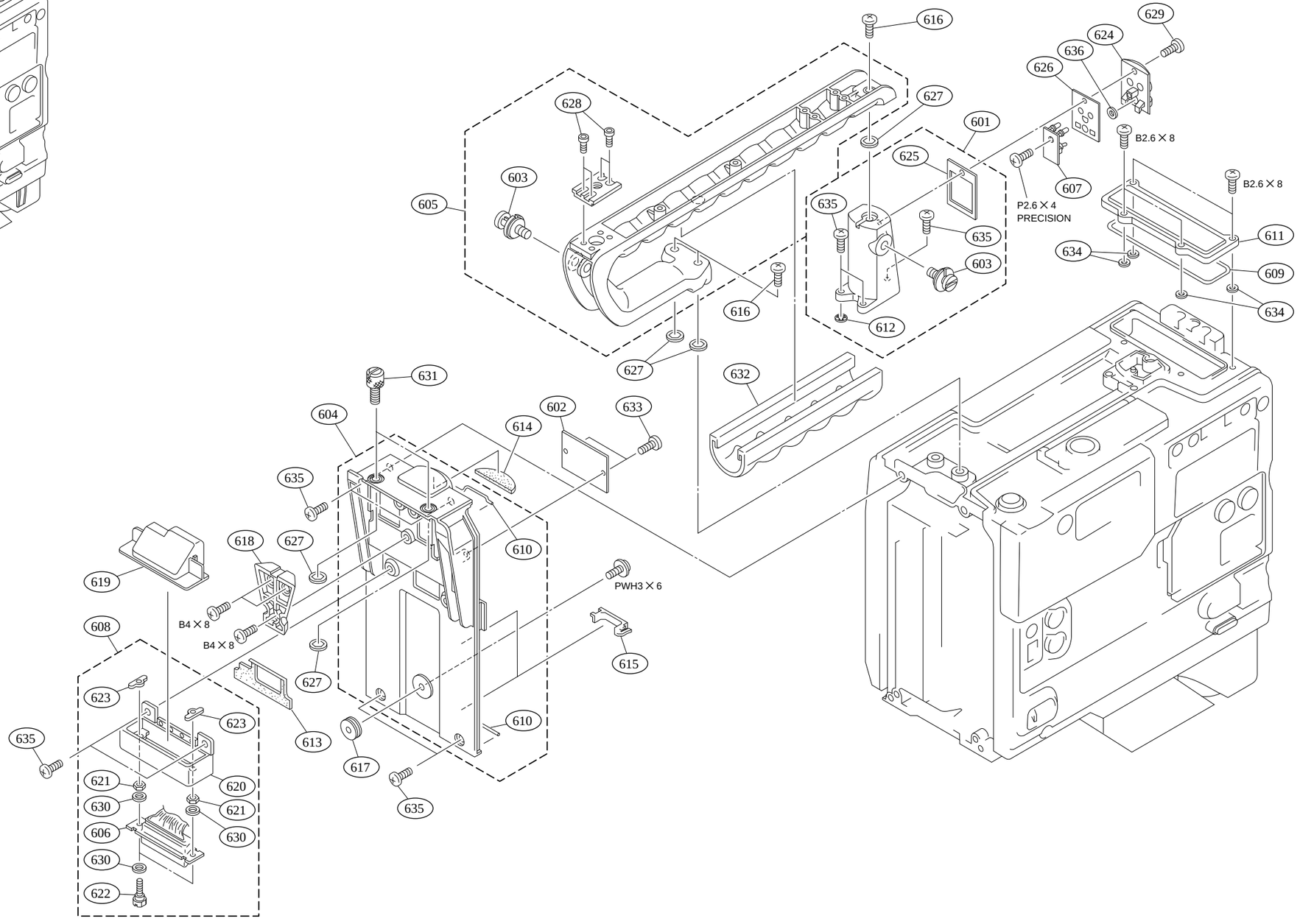

1-15

Outside Panel and Plug-in Boards

No.	Part No.	SP	Description
701	A-8277-532-A	o	MOUNTED CIRCUIT BOARD, PS-390
702	A-8277-533-A	o	MOUNTED CIRCUIT BOARD, DVP-1
703	A-8277-534-A	o	MOUNTED CIRCUIT BOARD, DVP-2
704	A-8277-537-A	o	MOUNTED CIRCUIT BOARD, MB-627A
705	A-8311-256-A	o	MOUNTED CIRCUIT BOARD, CT-187
706	A-8311-263-A	o	CONVETER ASSY, DC-DC
707	A-8311-264-A	o	MOUNTED CIRCUIT BOARD, IF-634
708	X-3678-089-2	o	ARM(R) ASSY,LID
709	X-3678-692-2	o	PCB GUIDE(R) ASSY
710	X-3678-740-4	o	PANEL SUB ASSY,OUTSIDE
711	X-3678-743-2	o	FRONT LID SUB ASSY
712	X-3678-763-1	o	PLATE(MDC) ASSY
713	1-541-638-32	s	MOTOR, DC FAN
714	1-662-328-11	o	PRINTED CIRCUIT BOARD, RX-26
715	2-279-715-01	s	RIVET, NYLON
716	2-640-315-01	o	SCREW (M2X5), SMALL, +P, SW
717	3-190-628-01	s	TUBE,SHIELD
718	3-371-630-01	s	SCREW (AZIMUTH), STEP
719	3-603-646-01	o	RETAINER,RE
720	3-603-653-01	o	COVER,HARNESS
721	3-603-655-01	o	SHIELD FINGER(MB-A)
722	3-603-658-01	o	CLAMP,HARNESS
723	3-603-666-01	o	HOLD PLATE,FLAT CABLE
724	3-603-668-02	o	RETAINER,CONNECTOR
725	3-603-679-01	s	STAINLESS SCREW +B3X10
726	3-603-680-01	s	STAINLESS SCREW +B3X12
727	3-603-681-01	s	STAINLESS SCREW +B3X20
728	3-603-712-03	o	BOARD,GUIDE PC(F)
729	3-603-733-01	s	HOLDER,SCREW
730	3-603-737-01	o	LEVER,BOARD
731	3-603-751-01	o	DROP PROTECTION(ME)
732	3-603-753-02	o	DUST PROTECT(2)
733	3-603-755-01	o	WINDOW(U),CASSETTE
734	3-604-462-01	s	CONNECTOR COVER,LIGHT
735	3-604-465-02	o	BRACKET,LIGHT CONNECTOR
736	3-604-470-02	o	CUSHION
737	3-604-690-01	o	SHAFT,SUPPORT
738	3-604-795-01	s	CAP BNC
739	3-604-913-01	o	CASSET RETAINER
740	3-606-305-01	o	RUBBER(OUT),DROP PROTECTION
741	3-669-596-00	s	WASHER (2.3), STOPPER
742	3-669-598-00	s	WASHER, CTL
743	3-673-015-00	o	PLATE, NUT (M2.6)
744	3-680-269-01	s	RUBBUR(DO),DROP PROTECTION
745	3-683-023-01	s	RUBBER A,DROP PROTECTION(LID)
746	3-683-025-01	s	RUBBER B,DROP PROTECTION(LID)
747	3-694-181-01	s	+P2.6X5 TYPE1,AROCK PRECISION
748	3-701-437-31	s	WASHER
749	3-703-075-00	s	CAP 2, SHAFT
750	3-712-786-21	s	DAMPER, OIL
751	3-729-061-01	s	SCREW (M2X4.5) (TYPE 1)
752	3-944-382-01	s	SCREW, STEP
753	9-911-838-99	s	CUSHION
754	Pending	s	RUBBER,DROP PROTECTION(F-LID)

1-16

http://getMANUAL.com

Outside Panel and Plug-in Boards

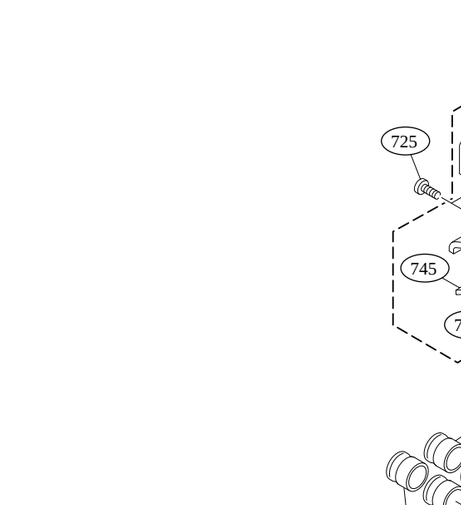

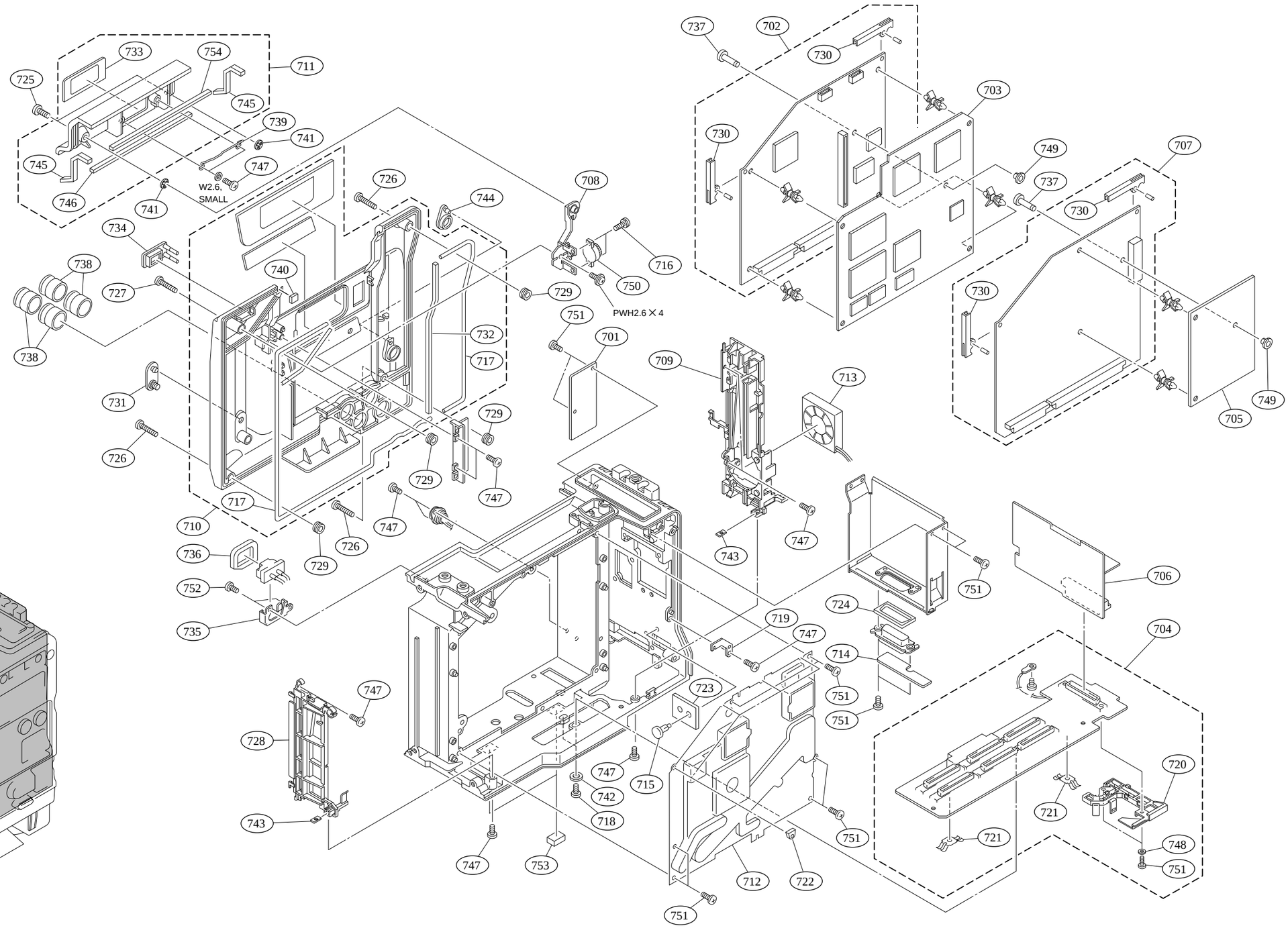

1-17

No.	Part No.	SP	Description
801	A-8263-217-A	s	KEY BOARD ASSY
802	A-8277-539-A	o	MOUNTED CIRCUIT BOARD, TC-80A
803	A-8311-245-A	o	MOUNTED CIRCUIT BOARD, SW-873
804	X-3678-125-1	s	KNOB(2 POSI) ASSY,SW
805	X-3678-126-1	s	KNOB(3 POSI) ASSY,SW
806	X-3678-680-1	o	DOOR ASSY SWITCH
807	X-3678-744-4	o	PANEL SUB ASSY,INSIDE
808	1-504-860-21	s	SPEAKER (2.8MC)
809	1-652-769-12	o	PRINTED CIRCUIT BOARD, KY-293
810	1-662-345-11	o	PRINTED CIRCUIT BOARD, HP-70
811	1-662-476-11	o	PRINTED CIRCUIT BOARD, PSW-55
812	1-662-479-11	o	PRINTED CIRCUIT BOARD, SW-882
813	3-531-576-21	s	RIVET
814	3-603-680-01	s	STAINLESS SCREW +B3X12
815	3-603-681-01	s	STAINLESS SCREW +B3X20
816	3-603-700-01	o	SHEET(LCD),DROP PROTECTION
817	3-603-709-01	o	PLATE(VTR),ORNAMENTAL
818	3-603-711-01	o	PLATE(LCD),ORNAMENTAL
819	3-603-718-01	o	SHEET(VTR),DROP PROTECTION
820	3-603-730-01	o	SHEET(VR),DROP PROTECTION
821	3-603-732-01	o	PLATE,ORNAMENTAL(VR)
822	3-603-733-01	s	HOLDER,SCREW
823	3-603-759-01	o	SUPPORT(R),INSIDE
824	3-604-464-03	s	PAD,SIDE
825	3-604-466-02	o	PLATE(MENU/LIGHT),ORNAMENTAL
826	3-604-476-03	o	SW COVER(N/P)
827	3-604-477-01	o	CUSHION(RE),DROP PROTECTION
828	3-604-478-02	o	SHEET(SP),DROP PROTECTION
829	3-606-409-01	o	PLATE,SHIELD
830	3-649-266-01	o	PIN, PARALLEL
831	3-673-281-00	o	SPRING, COMPRESSION
832	3-680-214-01	o	SPACER LCD
833	3-680-219-02	s	KNOB,VR
834	3-692-111-01	s	KNOB,RE
835	3-698-120-01	o	TUBE, SHIELD
836	3-701-445-21	s	WASHER, 7
837	3-717-854-01	o	SHAFT, KEY BOARD COVER
838	3-717-902-21	o	PLATE, ORNAMENTAL
839	3-717-902-31	o	PLATE, ORNAMENTAL
840	3-718-042-31	o	FRAME, KEY BOARD
841	3-718-043-31	o	COVER, KEY BOARD
842	3-718-044-01	s	COVER, KEY BOARD RUBBER
843	3-724-758-02	s	RUBBER (PUSH), DROP PROTECTION
844	3-724-759-03	s	PUSH (SW)
845	3-729-013-41	s	SCREW(M1.4X3.5),WASHERHEAD(+P)
846	3-742-035-01	o	STOPPER, ORNAMENTAL PANEL
847	3-849-405-00	s	COVER, EARPHONE JACK
848	3-884-053-00	s	RING (O)
849	Pending	s	RETAINER, SW, PUSH

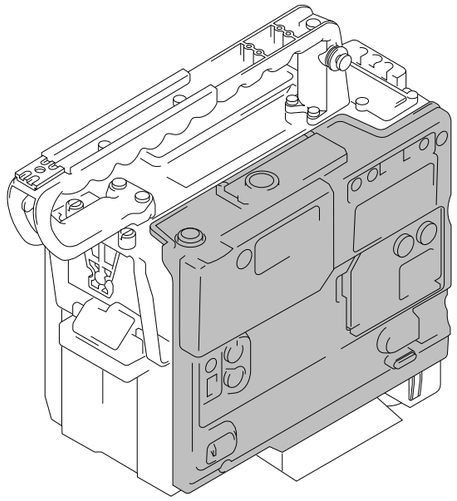

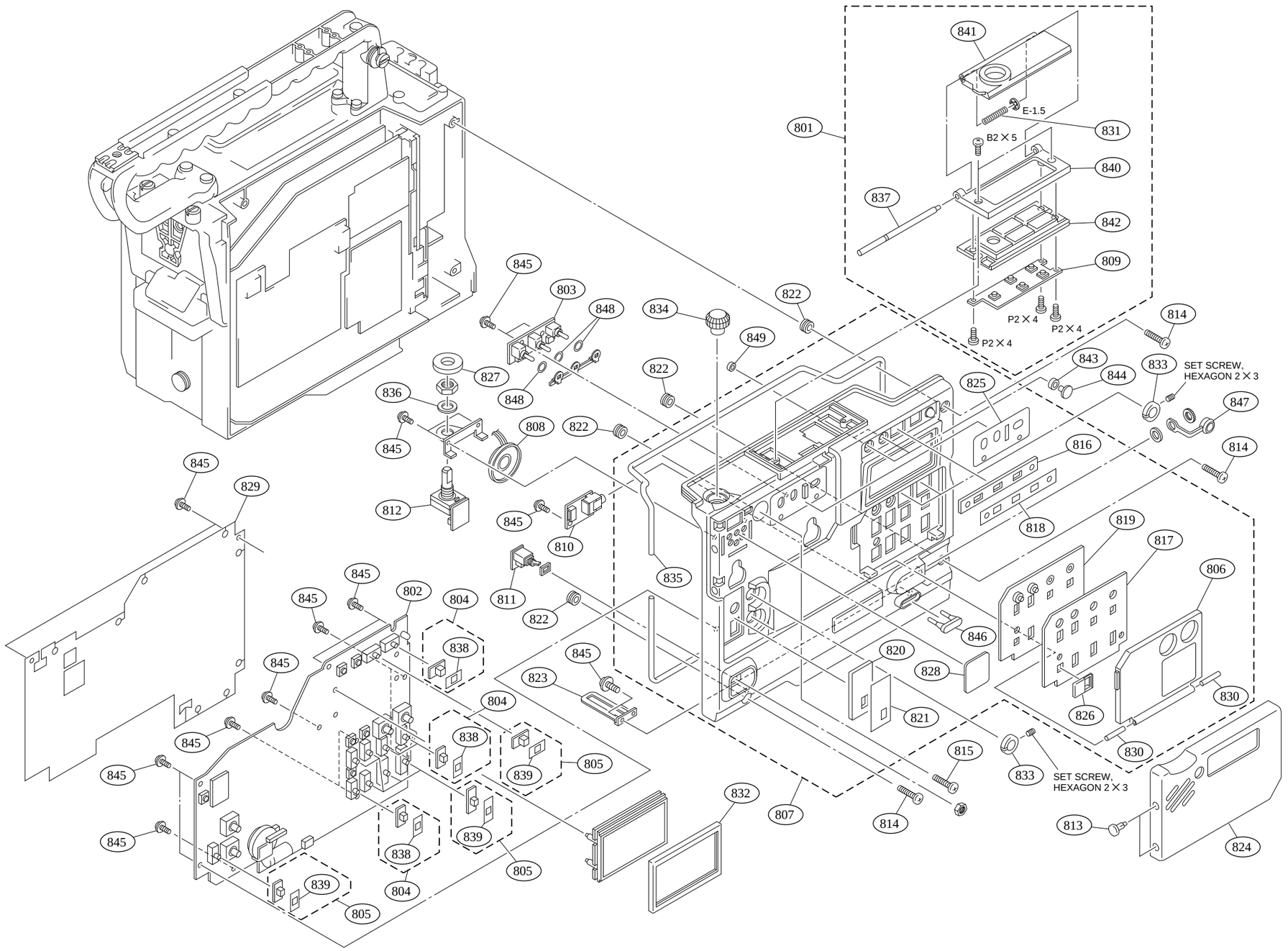
841
E-1.5
801
831
B2 × 5
840
837
842
809
P2 × 4
P2 × 4
P2 × 4
845
803
848
834
822
849
814
827
822
843
844
833
SET SCREW,
HEXAGON 2 × 3
836
825
847
848
808
822
816
845
829
814
812
845
818
819
817
810
806
845
802
804
811
835
822
846
838
845
820
828
823
845
804
821
826
838
805
830
839
815
830
845
832
833
SET SCREW,
HEXAGON 2 × 3
807
814
839
805
838
813
804
839
805
824
845
805

No.	Part No.	SP	Description
901	A-8277-531-A	o	MOUNTED CIRCUIT BOARD, CI-12
902	A-8277-535-A	o	MOUNTED CIRCUIT BOARD, AXM-14 [For UC,EK]
	A-8277-569-A	o	MOUNTED CIRCUIT BOARD, AXM-14 [For J]
903	A-8277-538-A	o	MOUNTED CIRCUIT BOARD, CNB-1A [For UC,EK]
	A-8277-567-A	o	MOUNTED CIRCUIT BOARD, CNB-1A [For J]
904	A-8277-766-A	o	MOUNTED CIRCUIT BOARD, DC-88
905	A-8278-025-C	s	MOUNT,V ASSY
906	X-3678-131-3	s	KNOB(M)ASSY,SW
907	X-3678-739-3	o	FRAME SUB ASSY,MAIN
908	1-662-332-12	o	PRINTED CIRCUIT BOARD, DC-87
909	1-662-337-11	o	PRINTED CIRCUIT BOARD, CO-22
910	1-662-338-11	o	PRINTED CIRCUIT BOARD, IO-117
911	1-662-343-11	o	PRINTED CIRCUIT BOARD, AL-40
912	1-662-480-11	o	PRINTED CIRCUIT BOARD, CT-185
913	1-766-377-12	s	CONNECTOR, BATTERY
914	3-178-489-01	s	RUBBER, SHIELD
915	3-603-544-01	o	SUPPORT B,BNC CONNECTOR
916	3-603-545-01	o	SUPPOT A,BNC CONNECTOR
917	3-603-647-02	o	COVER,PROTECTION
918	3-603-717-01	o	40P BRACKET(B)
919	3-603-744-01	o	PLATE,ORNAMENTAL(TOP)
920	3-603-758-02	o	PLATE(BOTTOM),ORNAMENTAL
921	3-603-766-01	o	PLATE ORNAMENTAL AUDIO(I/P) [for J]
922	3-604-471-03	o	COVER,BOTTOM
923	3-604-472-02	o	CONNECTOR BOX(2)
924	3-604-795-01	s	CAP BNC
925	3-605-847-01	o	PLATE(REAR4),ORNAMENTAL
926	3-669-595-00	s	WASHER (2), STOPPER
927	3-679-648-02	o	SPRING,COMPRESSION
928	3-679-669-05	o	SPACER
929	3-679-682-01	s	PACKING,DROP PROTECTION(40P)
930	3-679-688-02	o	LEVER,RELEASE
931	3-679-690-02	o	MOUNT,V
932	3-680-485-03	o	COVER,CONNECTOR
933	3-680-952-01	o	KNOB,RELEASE LEVER
934	3-694-181-01	s	+P2.6X5 TYPE1,AROCK PRECISION
935	3-723-096-01	o	COVER, BREAKER
936	3-723-097-01	o	FOOT, RUBBER
937	3-729-061-01	s	SCREW (M2X4.5) (TYPE 1)
938	3-732-791-01	s	SCREW (M2X3)
939	3-742-074-11	s	SCREW (+B 3X8)

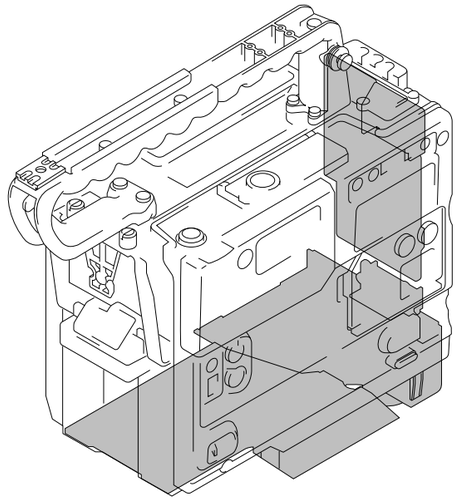

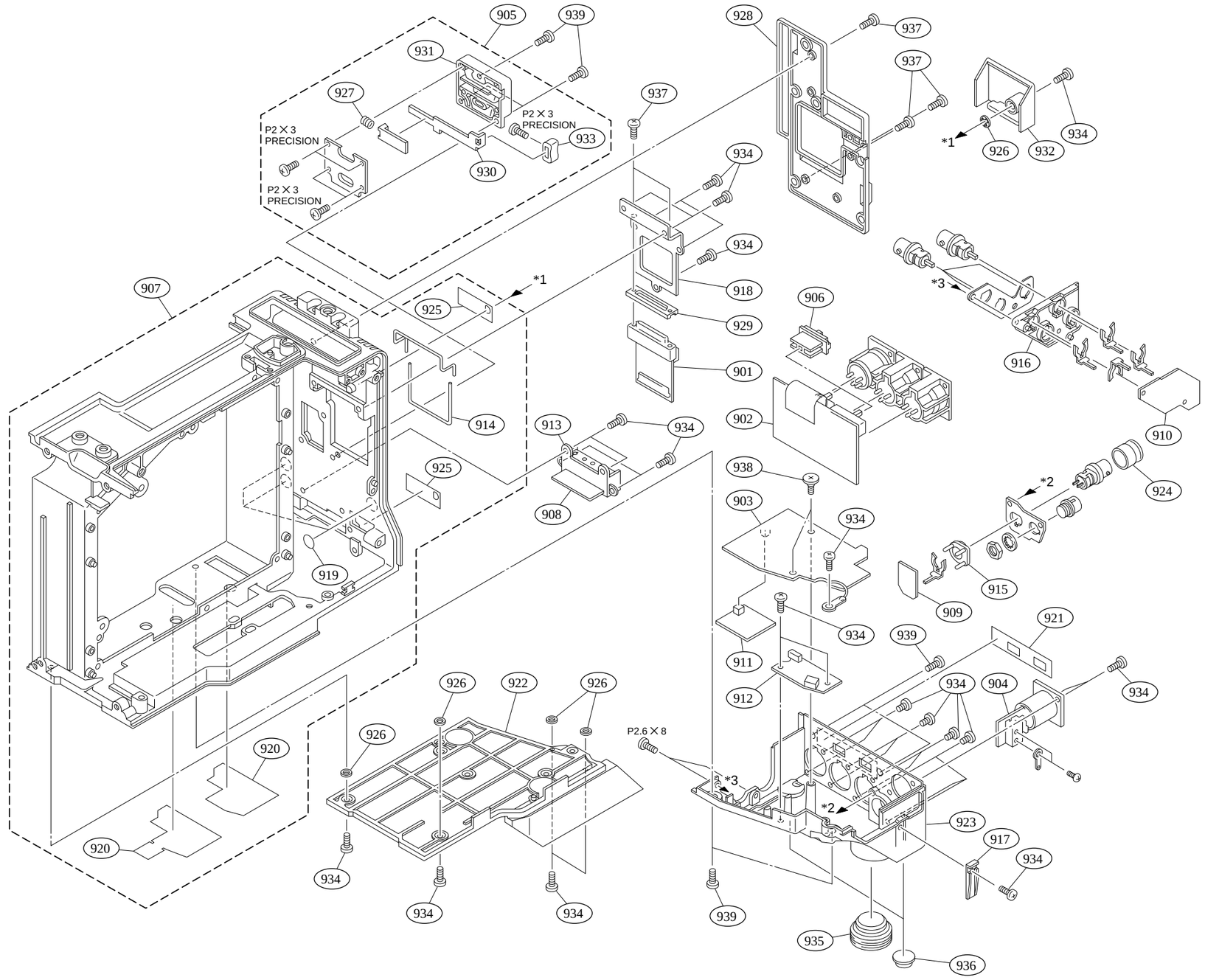
905
939
931
927
P2 × 3
PRECISION
P2 × 3
PRECISION
P2 × 3
PRECISION
933
930
928
937
937
937
934
*1
926
932
934
934
934
918
929
901
906
*3
916
910
907
925
*1
914
913
934
902
925
908
938
903
934
*2
924
919
915
909
934
911
912
939
921
934
904
934
926
922
926
926
P2.6 × 8
920
*3
*2
923
917
934
920
934
934
934
939
935
936

CCD Block and Front Panel

1-2-3. DNW-7/7P/90/90P/90WS/90WSP

No.	Part No.	SP	Description
1001	A-8277-734-A	o	MOUNTED CIRCUIT BOARD, AIF-8
1002	A-8277-768-A	o	MOUNTED CIRCUIT BOARD, CN-1183
1003	A-8277-774-A	o	MOUNTED CIRCUIT BOARD, TG-161 [For DNW-7]
	A-8277-809-A	o	MOUNTED CIRCUIT BOARD, TG-161(P) [For DNW-7P]
	A-8311-763-A	o	MOUNTED CIRCUIT BOARD, TG-164 [For DNW-90/90WS]
	A-8311-765-A	o	MOUNTED CIRCUIT BOARD, TG-164(P) [For DNW-90P/90WSP]
1004	A-8277-775-A	o	MOUNTED CIRCUIT BOARD, VA-167
1005	X-3678-684-1	o	FRAME SUB ASSY,FRONT
1006	X-3678-687-1	o	FRONT SW COVER SUB ASSY
1007	1-547-259-11	o	FILTER UNIT, OPTICAL [7]
1008	1-562-221-21	s	CONNECTOR (ROUND TYPE)(R-F)12P
1009	1-662-312-11	o	PRINTED CIRCUIT BOARD, PSW-33
1010	1-662-329-11	o	PRINTED CIRCUIT BOARD, MA-68
1011	1-662-334-11	o	PRINTED CIRCUIT BOARD, SW-808
1012	1-662-335-11	o	PRINTED CIRCUIT BOARD, SW-789
1013	2-279-715-11	s	RIVET, NYLON
1014	2-623-773-11	s	BOLT (M3X8), STAINLESS
1015	3-190-628-01	s	TUBE,SHIELD
1016	3-312-823-00	s	PACKING, KNOB
1017	3-603-614-01	o	PLATE,PROTECTION
1018	3-603-644-01	o	SPACER(FILTER)
1019	3-603-647-02	o	COVER,PROTECTION
1020	3-603-745-01	o	MIC CONNECTOR BOX(2)
1021	3-603-762-01	o	PLATE,SHIELD (FR)
1022	3-678-629-00	s	LEVER, MOUNT
1023	3-679-659-03	o	CLAMP,CABLE
1024	3-679-679-03	s	KNOB,VR(AUDIO)
1025	3-692-107-02	o	COVER,FRONT SWITCH
1026	3-692-111-01	s	KNOB,RE
1027	3-694-181-01	s	+P2.6X5 TYPE1,AROCK PRECISION
1028	3-699-048-01	s	CAP, MOUNT
1029	3-701-505-00	s	SET SCREW, DOUBLE POINT 3X3
1030	3-709-105-01	o	BRACKET, LENS
1031	3-710-024-01	o	PACKING, VF
1032	3-710-054-01	s	KNOB, FILTER
1033	3-729-013-41	s	SCREW(M1.4X3.5),WASHERHEAD(+P)
1034	3-729-061-01	s	SCREW (M2X4.5) (TYPE 1)
1035	3-729-069-01	s	BUTTON, VTR START
1036	3-729-072-01	s	SCREW, +K (4X8)
1037	3-742-011-01	s	SCREW, 1/4, 3/8 CONVERSION
1038	3-742-012-01	s	SHOE (B), CAMERA
1039	3-742-015-01	o	WEDGE (B), MOUNTING
1040	3-742-074-11	s	SCREW (+B 3X8)

1-22

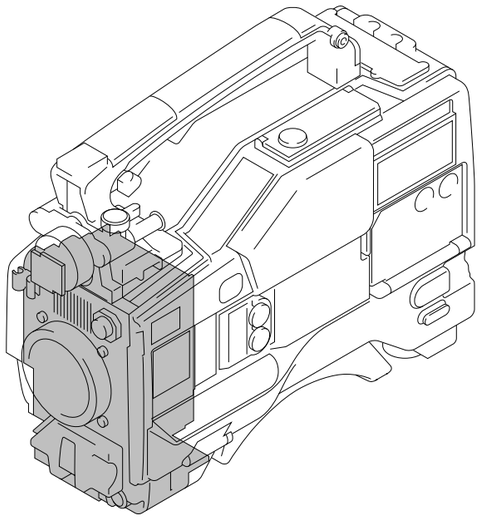

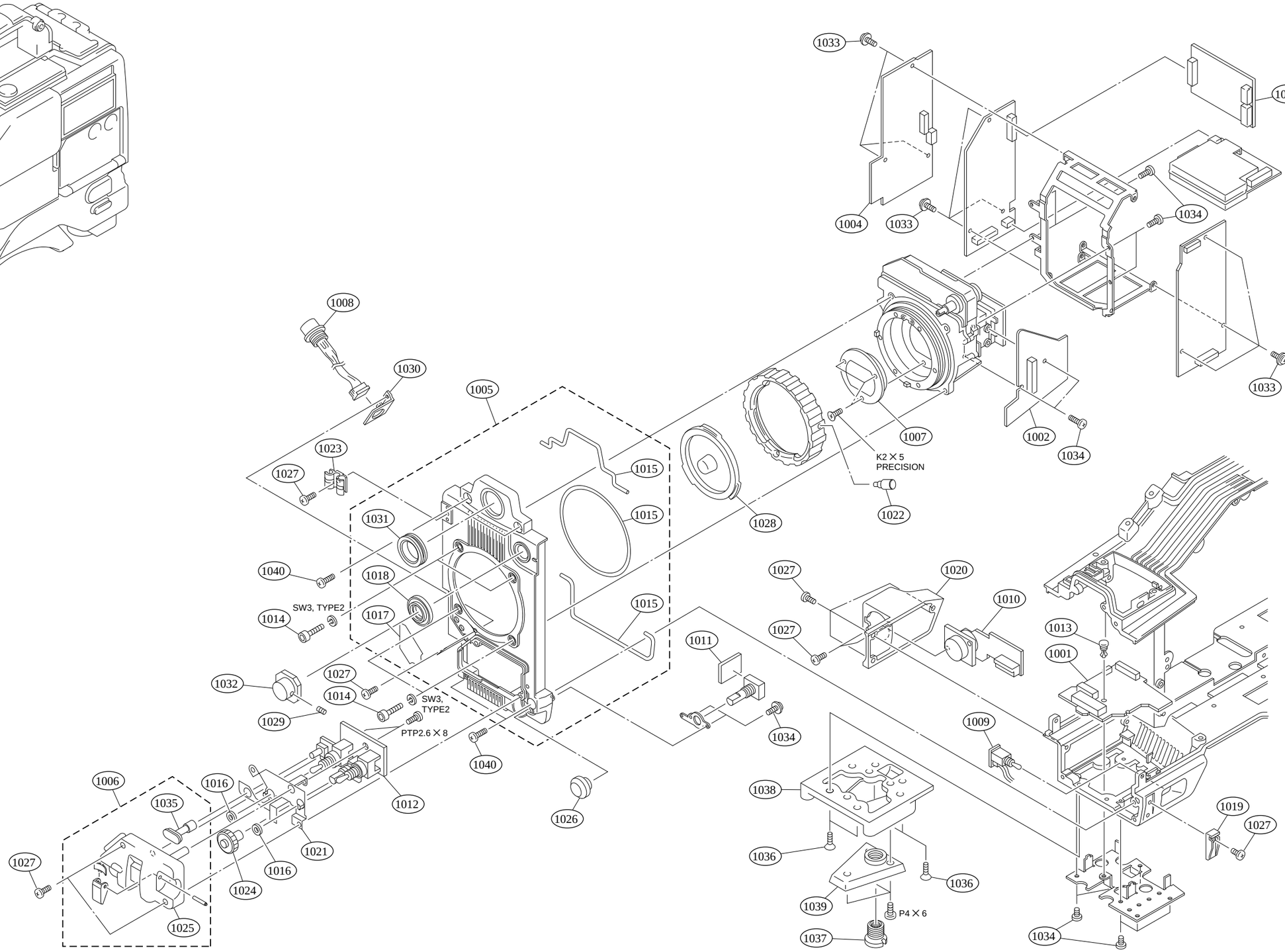
1033
1003
1004
1033
1034
1008
1030
1005
1033
1007
1002
1034
K2 × 5
PRECISION
1022
1023
1027
1015
1028
1031
1015
1040
1018
SW3, TYPE2
1014
1017
1015
1027
1020
1010
1027
1011
1013
1001
1032
1027
1014
SW3,
TYPE2
1029
PTP2.6 × 8
1034
1009
1040
1038
1019
1027
1006
1016
1035
1012
1026
1036
1036
1021
1016
1039
P4 × 6
1027
1024
1037
1034
1025

No.	Part No.	SP	Description
1101	A-8278-371-B	o	SLIDE ASSY,VF
1102	X-3678-679-2	o	HANDLE SUB ASSY
1103	1-662-330-11	o	PRINTED CIRCUIT BOARD, LP-86
1104	1-662-331-11	o	PRINTED CIRCUIT BOARD, SW-823
1105	3-178-489-01	s	RUBBER, SHIELD
1106	3-603-702-01	o	COVER,FRONT
1107	3-603-703-01	o	PLATE,HANDLE
1108	3-603-704-02	o	COVER,REAR
1109	3-603-707-01	o	PLATE,BLIND(WRR)
1110	3-603-708-01	o	COVER,BOTTOM
1111	3-603-735-01	o	DROP PROTECTION(SW)
1112	3-603-736-01	o	COVER,LIGHT CONNECTER
1113	3-603-742-01	o	DROP PROTECTION(LIGHT)
1114	3-604-620-01	o	FIXED RABLE(2),VF SHOE
1115	3-671-150-01	o	CLAMP
1116	3-673-046-00	s	LEVER, LOCK
1117	3-679-683-01	o	ARM,SLIDE
1118	3-679-684-01	o	REST,ARM
1119	3-679-685-01	o	TABEL,FIXED,VF SLIDE
1120	3-679-698-01	o	RING(C),LOCK
1121	3-679-702-01	o	CUSION,STOPPER
1122	3-681-884-02	o	LABEL, WS [For DNW-90WS/90WSP]
1123	3-689-039-11	s	SCREW (M2X6), SMALL
1124	3-694-181-01	s	+P2.6X5 TYPE1,AROCK PRECISION
1125	3-701-506-01	s	SET SCREW, DOUBLE POINT 3X4
1126	3-701-508-00	s	SET SCREW, DOUBLE POINT 3X6
1127	3-710-039-03	s	SHOE, SLIDE
1128	3-711-765-01	s	BOLT (M3), HEXAGON SOCKET
1129	3-711-794-01	o	PIN, STOPPER
1130	3-720-919-01	o	RUBBER, LOCK RING
1131	3-729-013-41	s	SCREW(M1.4X3.5),WASHERHEAD(+P)
1132	3-729-061-01	s	SCREW (M2X4.5) (TYPE 1)
1133	3-742-004-01	s	RING, NYLON
1134	3-742-074-11	s	SCREW (+B 3X8)
1135	3-895-622-01	s	RING (DIA. 5), O

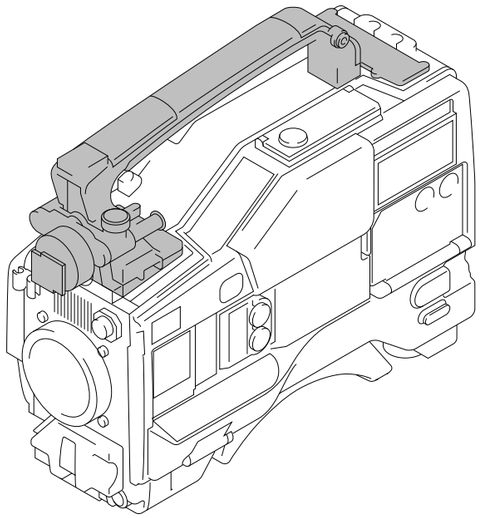

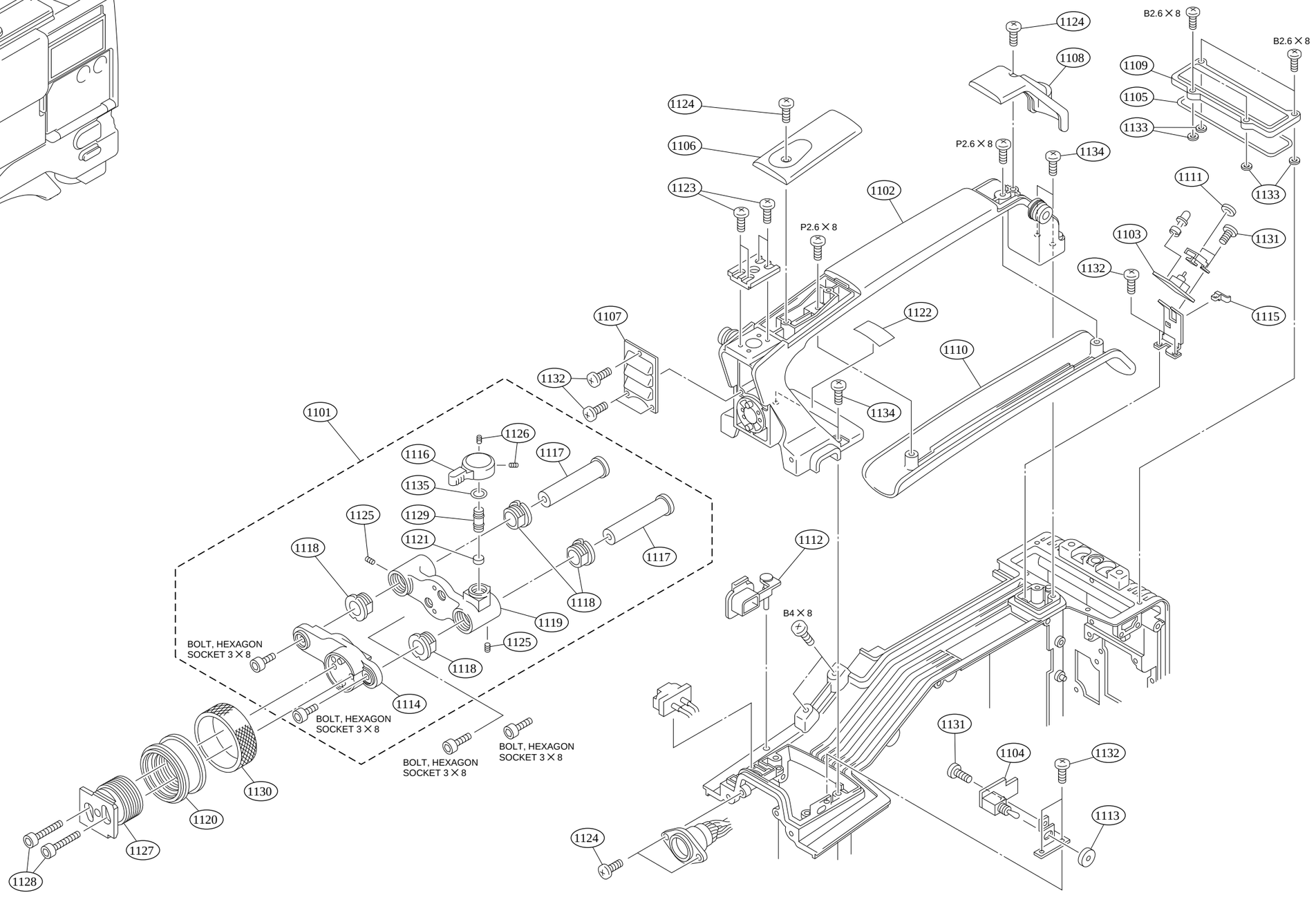
1124
B2.6 × 8
B2.6 × 8
1108
1109
1105
1133
1124
1106
P2.6 × 8
1134
1123
1102
1111
1133
P2.6 × 8
1103
1131
1132
1115
1107
1122
1110
1132
1134
1101
1126
1116
1117
1135
1125
1129
1121
1118
1117
1118
1119
1125
BOLT, HEXAGON SOCKET 3 × 8
1118
1114
BOLT, HEXAGON SOCKET 3 × 8
BOLT, HEXAGON SOCKET 3 × 8
BOLT, HEXAGON SOCKET 3 × 8
1130
1120
1127
1128
1112
B4 × 8
1131
1104
1132
1113
1124

No.	Part No.	SP	Description
1201	A-8277-532-A	o	MOUNTED CIRCUIT BOARD, PS-390
1202	X-3678-089-2	o	ARM(R) ASSY,LID
1203	X-3678-685-2	o	PANEL SUB ASSY,OUT SIDE
1204	X-3678-689-2	o	LID,FRONT SUB ASSY
1205	2-640-315-01	o	SCREW (M2X5), SMALL, +P, SW
1206	3-190-628-01	s	TUBE,SHIELD
1207	3-603-679-01	s	STAINLESS SCREW +B3X10
1208	3-603-680-01	s	STAINLESS SCREW +B3X12
1209	3-603-681-01	s	STAINLESS SCREW +B3X20
1210	3-603-733-01	s	HOLDER,SCREW
1211	3-603-751-01	o	DROP PROTECTION(ME)
1212	3-603-752-02	o	DUST PROTECT(1)
1213	3-603-753-02	o	DUST PROTECT(2)
1214	3-603-755-01	o	WINDOW(U),CASSETTE
1215	3-603-769-01	o	WINDOW(L),CASSETTE
1216	3-604-913-01	o	CASSET RETAINER
1217	3-606-305-01	o	RUBBER(OUT),DROP PROTECTION
1218	3-669-596-00	s	WASHER (2.3), STOPPER
1219	3-680-269-01	s	RUBBUR(DO),DROP PROTECTION
1220	3-683-023-01	s	RUBBER A,DROP PROTECTION(LID)
1221	3-683-025-01	s	RUBBER B,DROP PROTECTION(LID)
1222	3-685-607-01	o	LABEL(2),WS [For DNW-90WS/90WSP]
1223	3-694-181-01	s	+P2.6X5 TYPE1,AROCK PRECISION
1224	3-712-786-21	s	DAMPER, OIL
1225	3-729-061-01	s	SCREW (M2X4.5) (TYPE 1)
1226	Pending	s	RUBBER,DROP PROTECTION(F-LID)

http://getMANUAL.com

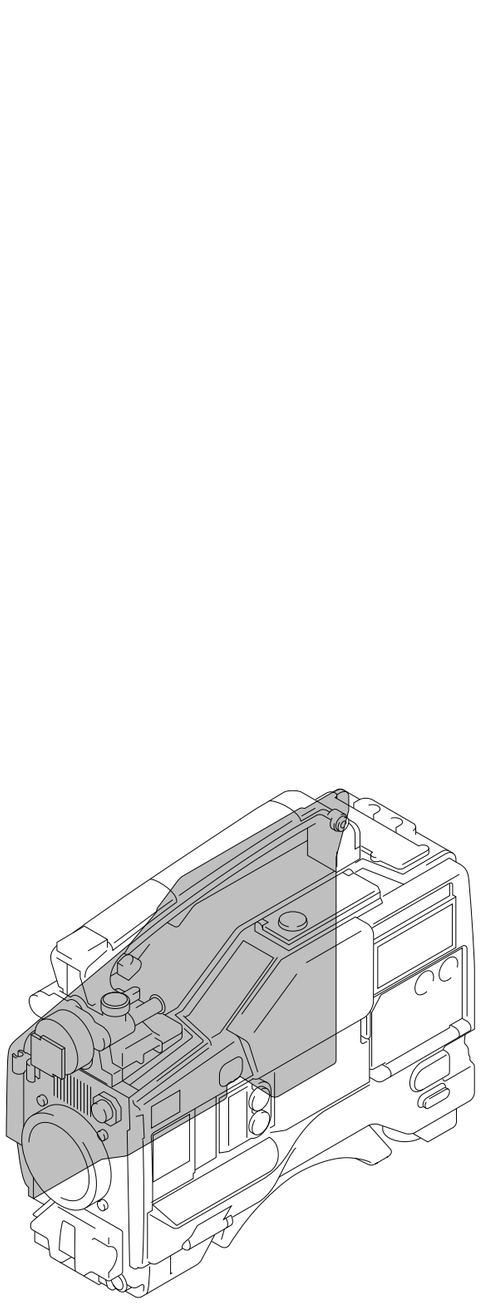

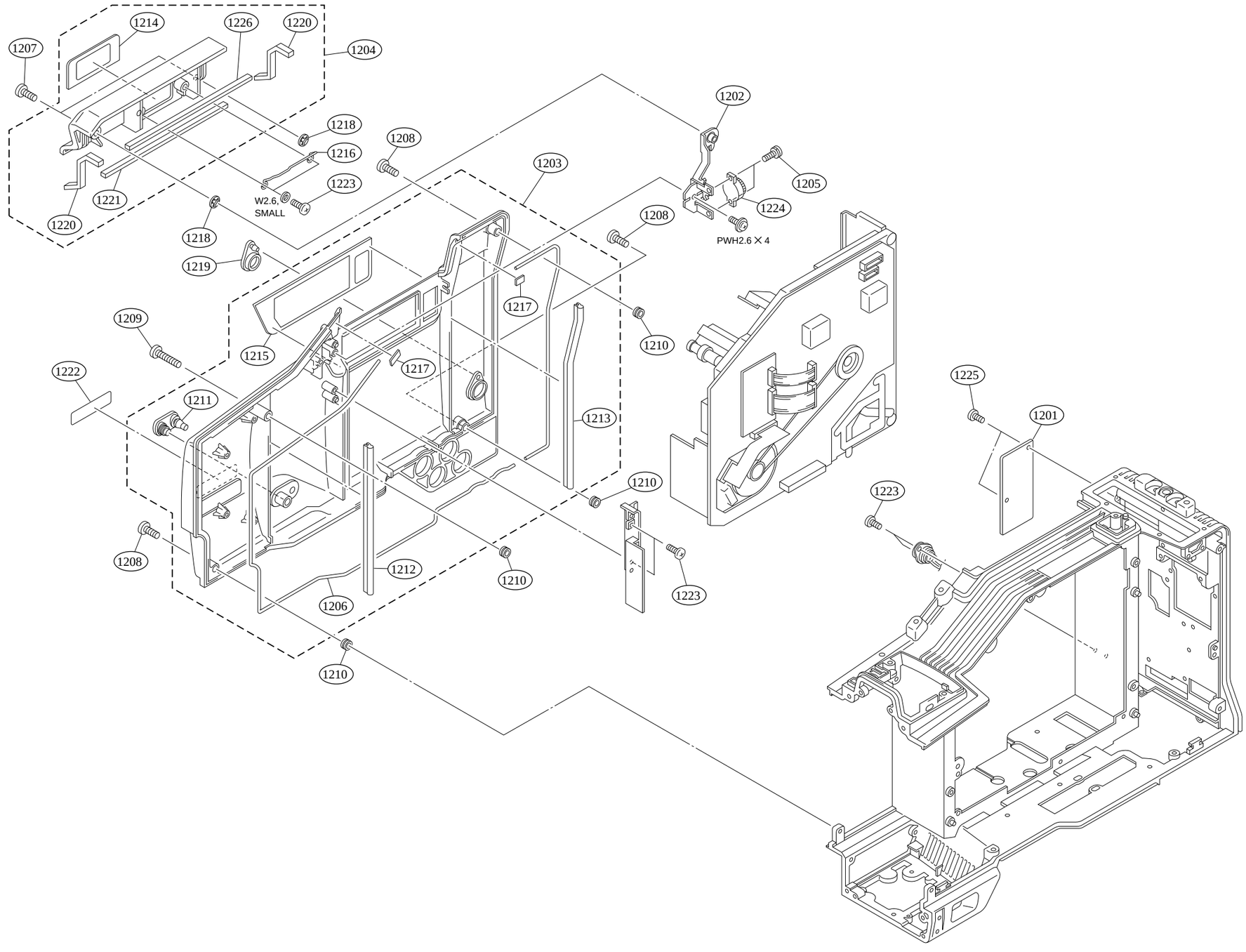

Plug-in Boards

No.	Part No.	SP	Description
1301	A-8277-533-A	o	MOUNTED CIRCUIT BOARD, DVP-1
1302	A-8277-534-A	o	MOUNTED CIRCUIT BOARD, DVP-2
1303	A-8277-568-A	o	MOUNTED CIRCUIT BOARD, MB-627
1304	A-8277-735-A	o	MOUNTED CIRCUIT BOARD, CN-1193 [For DNW-7/7P/90/90P]
	A-8311-974-A	o	MOUNTED CIRCUIT BOARD, RC-61 [For DNW-90WS/90WSP]
1305	A-8277-776-A	o	MOUNTED CIRCUIT BOARD, DCP-1
1306	A-8277-777-A	o	MOUNTED CIRCUIT BOARD, ES-11(N) [For J,UC]
	A-8277-810-A	o	MOUNTED CIRCUIT BOARD, ES-11(P) [For EK]
1307	A-8277-785-A	o	CONVETER ASSY, DC-DC
1308	X-3678-692-2	o	PCB GUIDE(R) ASSY
1309	X-3678-763-1	o	PLATE(MDC) ASSY
1310	1-541-638-32	s	MOTOR, DC FAN
1311	1-662-328-11	o	PRINTEC CIRCUIT BOARD, RX-26
1312	2-279-715-01	s	RIVET, NYLON
1313	3-371-630-01	s	SCREW (AZIMUTH), STEP
1314	3-603-646-01	o	RETAINER,RE
1315	3-603-653-01	o	COVER,HARNESS
1316	3-603-655-01	o	SHIELD FINGER(MB-A)
1317	3-603-658-01	o	CLAMP,HARNESS
1318	3-603-666-01	o	HOLD PLATE,FLAT CABLE
1319	3-603-668-02	o	RETAINER,CONNECTOR
1320	3-603-712-03	o	BOARD,GUIDE PC(F)
1321	3-603-737-01	o	LEVER,BOARD
1322	3-603-746-01	o	CUSHION,DUST PROTECTION
1323	3-669-598-00	s	WASHER, CTL
1324	3-673-015-00	o	PLATE, NUT (M2.6)
1325	3-694-181-01	s	+P2.6X5,TYPE1,ARÖCK PRECISION
1326	3-701-437-31	s	WASHER
1327	3-729-061-01	s	SCREW (M2X4.5) (TYPE 1)

1-28

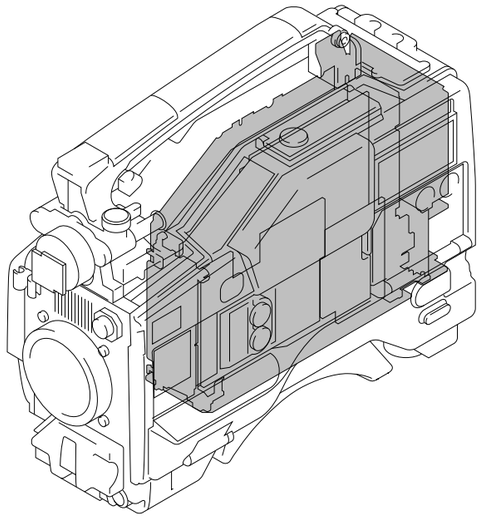

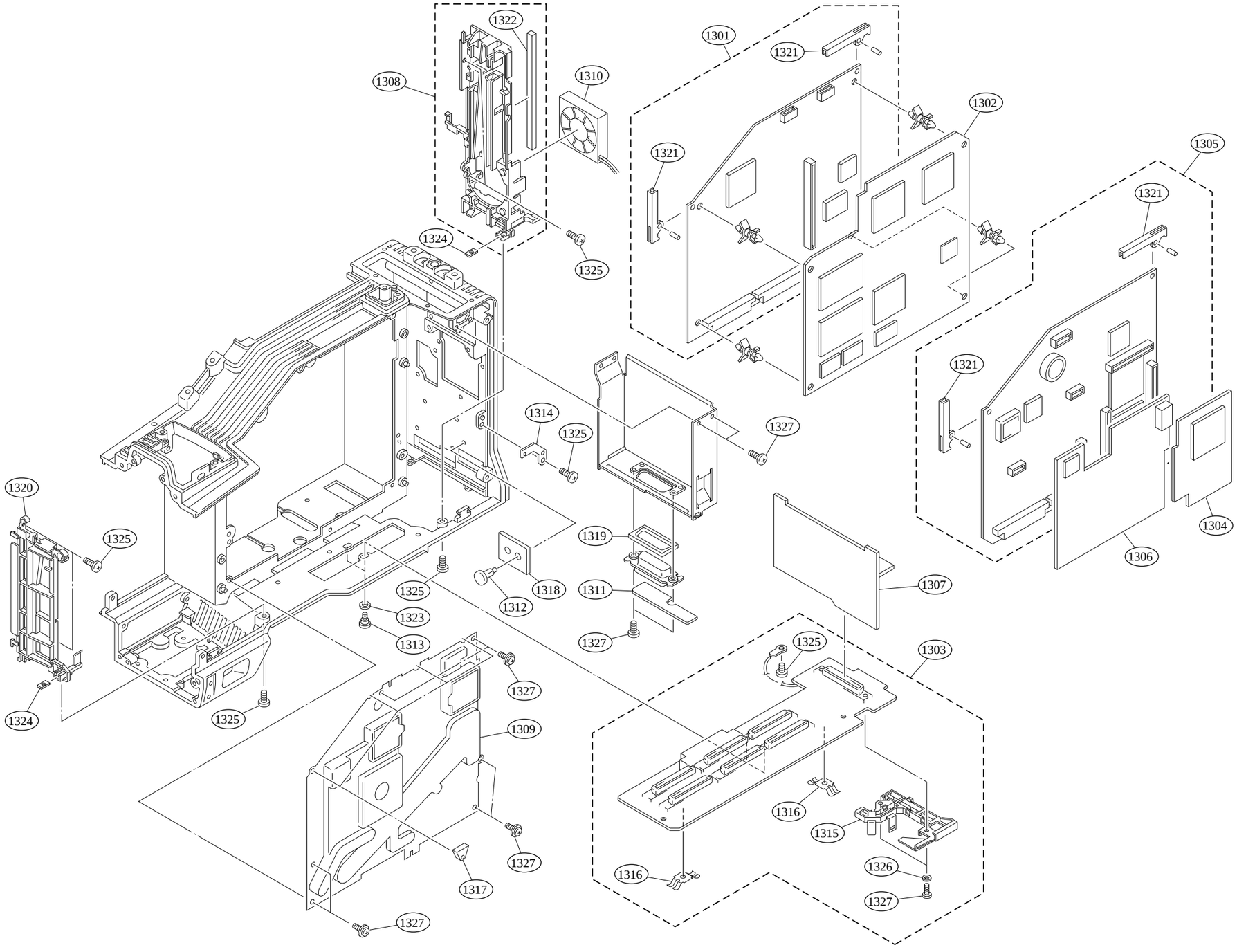
1322
1301
1321
1308
1310
1302
1321
1305
1321
1324
1325
1314
1325
1327
1321
1320
1325
1319
1318
1311
1312
1307
1304
1306
1325
1323
1313
1327
1325
1303
1327
1309
1316
1315
1326
1327
1316
1317
1327

No.	Part No.	SP	Description
1401	A-8263-217-A	s	KEY BOARD ASSY
1402	A-8263-224-C	o	DOOR ASSY, CARD
1403	A-8277-565-A	o	MOUNTED CIRCUIT BOARD, TC-80
1404	X-3678-063-3	o	BRACKET ASSY,CARD KNOB
1405	X-3678-064-1	s	CONNECTOR ASSY
1406	X-3678-125-1	s	KNOB(2 POSI) ASSY,SW
1407	X-3678-126-1	s	KNOB(3 POSI) ASSY,SW
1408	X-3678-680-1	o	DOOR ASSY SWITCH
1409	X-3678-695-2	o	PANEL SUB ASSY,IN SIDE
1410	1-503-293-00	s	SPEAKER
1411	1-550-965-12	o	CARD,SET UP
1412	1-652-769-12	o	PRINTED CIRCUIT BOARD, KY-293
1413	1-662-345-11	o	PRINTED CIRCUIT BOARD, HP-70
1414	1-662-346-11	o	PRINTED CIRCUIT BOARD, SW-780
1415	1-953-418-11	o	HARNESS, SUB (TC7-SPK)
1416	1-956-452-11	o	HARNESS, SUB (HP1-TC503)
1417	1-956-453-11	o	HARNESS, SUB (TC901-SW18)
1418	1-956-457-12	o	HARNESS, SUB (KY150-MB30)
1419	3-344-751-01	s	SPRING, COMPRESSION
1420	3-603-609-01	o	COVER,TURBO GAIN
1421	3-603-613-01	o	BASE,TURBO GAIN
1422	3-603-677-01	o	PLATE,ORNAMENTAL SW CAMERA
1423	3-603-680-01	s	STAINLESS SCREW +B3X12
1424	3-603-681-01	s	STAINLESS SCREW +B3X20
1425	3-603-700-01	o	SHEET(LCD),DROP PROTECTION
1426	3-603-706-01	o	MENU COVER
1427	3-603-709-01	o	PLATE(VTR),ORNAMENTAL
1428	3-603-710-01	o	SHEET(CARD),DROP PROTECTION
1429	3-603-711-01	o	PLATE(LCD),ORNAMENTAL
1430	3-603-714-02	s	PAD,SIDE
1431	3-603-718-01	o	SHEET(VTR),DROP PROTECTION
1432	3-603-728-02	o	PLATE,SHIELD
1433	3-603-729-03	o	PLATE,MENU
1434	3-603-730-01	o	SHEET(VR),DROP PROTECTION
1435	3-603-731-01	o	PLATE(CARD),ORNAMENTAL
1436	3-603-732-01	o	PLATE,ORNAMENTAL(VR)
1437	3-603-733-01	s	HOLDER,SCREW
1438	3-603-747-01	o	BLIND, PAL [For PAL]
1439	3-603-759-01	o	SUPPORT(R),INSIDE
1440	3-603-761-01	o	DROP PROTECTION(CAM SW)
1441	3-603-767-01	o	BLIND SHEET(CAM SW)
1442	3-605-904-01	o	TUBE,DROP PROTECTION
1443	3-673-281-00	o	SPRING, COMPRESSION
1444	3-679-581-02	o	DOOR,CARD
1445	3-679-582-03	o	WINDOW(CARD),DOOR
1446	3-679-583-02	o	HOLDER(CN)
1447	3-679-587-01	s	RUBBER(CARD),DROP PROTECTION
1448	3-679-589-01	o	SHAFT(CARD),DOOR
1449	3-679-591-01	o	SHAFT(CARD),LINK
1450	3-679-592-01	o	SPRING(CARD),TORSION
1451	3-679-593-01	o	CARD PANEL
1452	3-680-214-01	o	SPACER LCD
1453	3-680-219-02	s	KNOB,VR
1454	3-692-192-01	o	LABEL (2),FILTER
1455	3-694-181-01	s	+P2.6X5 TYPE1,AROCK PRECISION
1456	3-698-120-01	o	TUBE, SHIELD
1457	3-717-854-01	o	SHAFT, KEY BOARD COVER
1458	3-717-902-21	o	PLATE, ORNAMENTAL
1459	3-717-902-31	o	PLATE, ORNAMENTAL
1460	3-718-042-31	o	FRAME, KEY BOARD
1461	3-718-043-31	o	COVER, KEY BOARD
1462	3-718-044-01	s	COVER, KEY BOARD RUBBER
1463	3-724-716-02	s	SHEET, DROP PROTECTION
1464	3-724-757-02	s	RETAINER, SW, PUSH
1465	3-724-758-02	s	RUBBER (PUSH), DROP PROTECTION
1466	3-724-759-03	s	PUSH (SW)
1467	3-726-829-01	s	WASHER, STOPPER
1468	3-729-013-41	s	SCREW(M1.4X3.5),WASHERHEAD(+P)
1469	3-742-035-01	o	STOPPER, ORNAMENTAL PANEL
1470	3-849-405-00	s	COVER, EARPHONE JACK

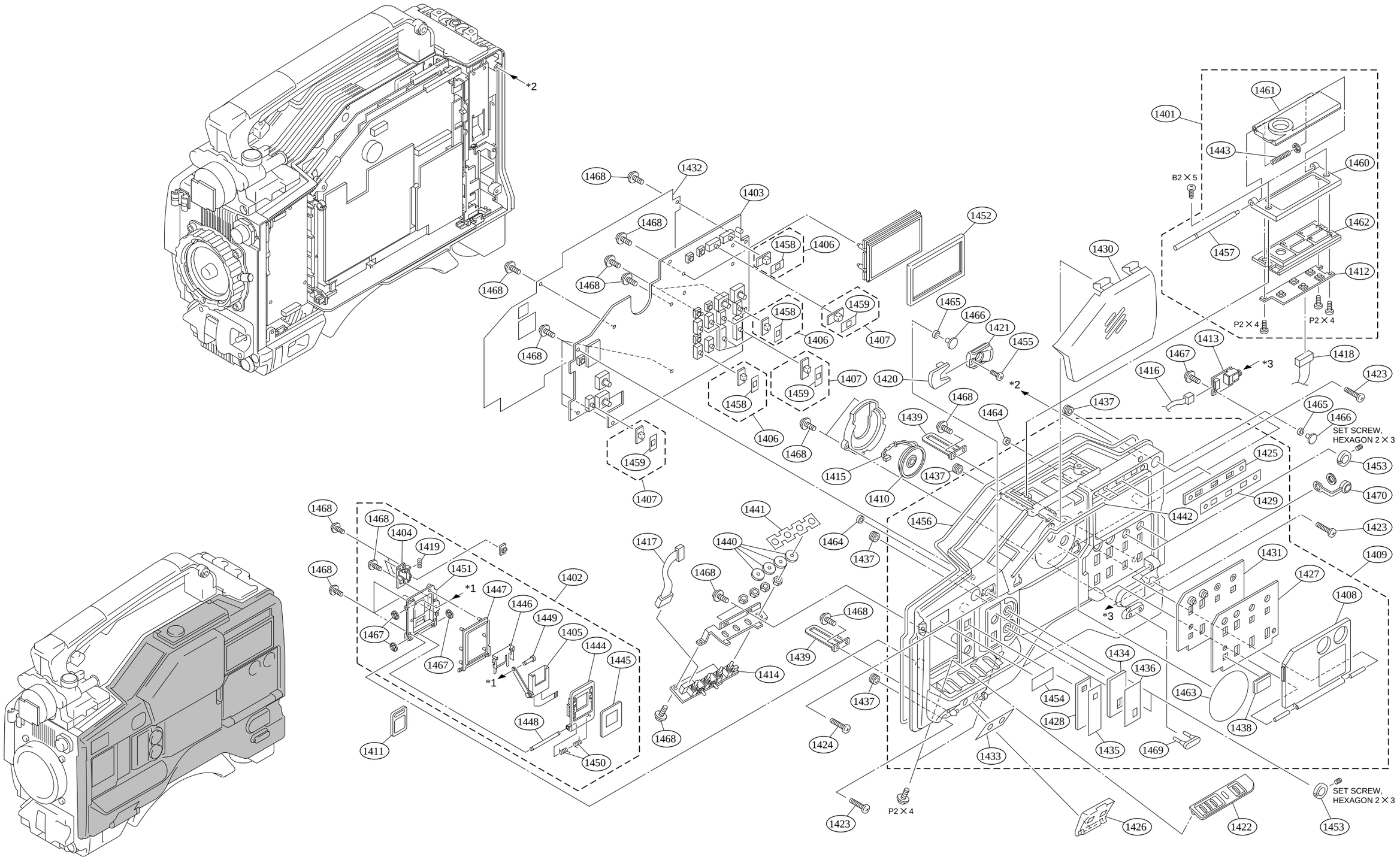
*2
1468
1432
1403
1468
1458
1406
1452
1468
1468
1459
1458
1406
1407
1465
1466
1421
1455
1468
1407
1459
1458
1406
1420
*2
1468
1464
1439
1415
1437
1410
1459
1407
1468
1468
1404
1419
1451
*1
1447
1446
1449
1405
1444
1445
1467
1467
*1
1402
1411
1448
1450
1417
1441
1440
1464
1437
1468
1468
1414
1439
1468
1437
1424
1423
P2 × 4
1456
1430
1461
1401
1443
1460
B2 × 5
1462
1457
1412
P2 × 4
P2 × 4
1413
1467
1416
*3
1418
1423
1437
1465
1466
SET SCREW,
HEXAGON 2 × 3
1425
1453
1470
1429
1442
1423
1431
1409
1427
1408
*3
1434
1436
1463
1454
1428
1438
1435
1469
1433
1426
1422
SET SCREW,
HEXAGON 2 × 3
1453

Shoulder Pad and Connector Box

No.	Part No.	SP	Description
1501	A-8277-531-A	o	MOUNTED CIRCUIT BOARD, CI-12
1502	A-8277-535-A	o	MOUNTED CIRCUIT BOARD, AXM-14 [For UC,EK]
	A-8277-569-A	o	MOUNTED CIRCUIT BOARD, AXM-14 [For J]
1503	A-8277-570-A	o	MOUNTED CIRCUIT BOARD, CNB-1 [For UC,EK]
	A-8277-571-A	o	MOUNTED CIRCUIT BOARD, CNB-1 [For J]
1504	A-8277-766-A	o	MOUNTED CIRCUIT BOARD, DC-88
1505	A-8278-025-C	s	MOUNT,V ASSY
1506	A-8278-374-A	o	PAD ASSY,SHOULDER
1507	X-3678-131-3	s	KNOB(M)ASSY,SW
1508	X-3678-686-3	o	FRAME SUB ASSY,MAIN
1509	1-662-332-12	o	PRINTED CIRCUIT BOARD, DC-87
1510	1-662-337-11	o	PRINTED CIRCUIT BOARD, CO-22
1511	1-662-338-11	o	PRINTED CIRCUIT BOARD, IO-117
1512	1-662-343-11	o	PRINTED CIRCUIT BOARD, AL-40
1513	1-766-377-12	s	CONNECTOR, BATTERY
1514	3-178-489-01	s	RUBBER, SHIELD
1515	3-603-544-01	o	SUPPORT B,BNC CONNECTOR
1516	3-603-545-01	o	SUPPOT A,BNC CONNECTOR
1517	3-603-547-02	o	BOX,CONNECTOR
1518	3-603-647-02	o	COVER,PROTECTION
1519	3-603-717-01	o	40P BRACKET(B)
1520	3-603-739-02	o	PLATE(REAR1),ORNAMENTAL
1521	3-603-743-01	o	SHEET,PAD STOPPER
1522	3-603-744-01	o	PLATE,ORNAMENTAL(TOP)
1523	3-603-758-02	o	PLATE(BOTTOM),ORNAMENTAL
1524	3-603-766-01	o	PLATE ORNAMENTAL AUDIO (I/P) [For J]
1525	3-604-795-01	s	CAP BNC
1526	3-663-748-00	s	WASHER, SUS
1527	3-669-595-00	s	WASHER (2), STOPPER
1528	3-679-648-02	o	SPRING,COMPRESSION
1529	3-679-669-05	o	SPACER
1530	3-679-682-01	s	PACKING,DROP PROTECTION(40P)
1531	3-679-688-02	o	LEVER,RELEASE
1532	3-679-690-02	o	MOUNT,V
1533	3-680-485-03	o	COVER,CONNECTOR
1534	3-680-952-01	o	KNOB,RELEASE LEVER
1535	3-685-166-01	o	WASHER, SCREW CLAMP
1536	3-694-181-01	s	+P2.6X5 TYPE1,AROCK PRECISION
1537	3-711-703-01	o	STOPPER
1538	3-723-096-01	o	COVER, BREAKER
1539	3-723-097-01	o	FOOT, RUBBER
1540	3-729-061-01	s	SCREW (M2X4.5) (TYPE 1)
1541	3-732-791-01	s	SCREW (M2X3)
1542	3-742-074-11	s	SCREW (+B 3X8)

1-32

Shoulder Pad and Connector Box

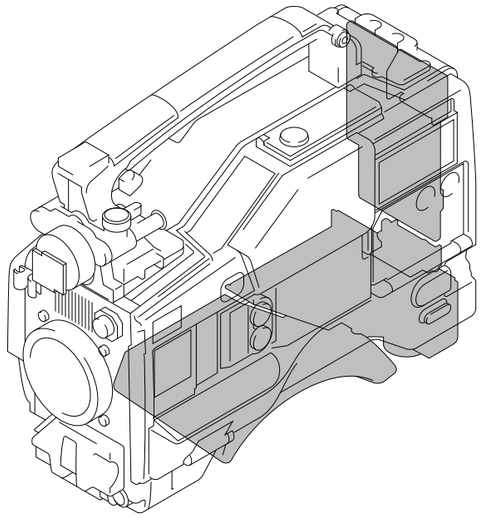

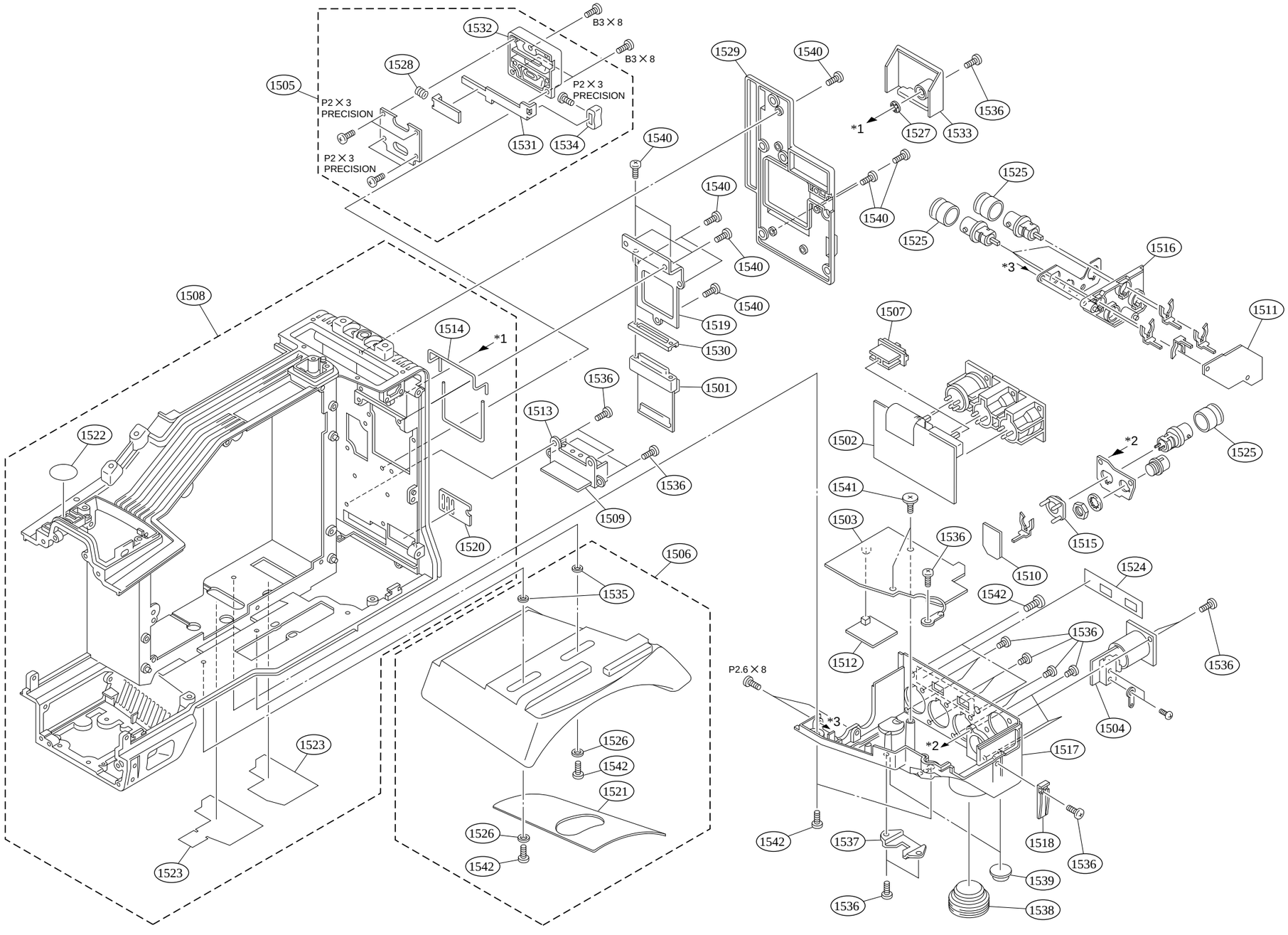

1-33

1-2-4. Tripad Adaptor (For J except DNV-5)

No.	Part No.	SP	Description
1601	A-8277-622-A	o	ARM ASSY, SLIDE
1602	2-381-631-01	o	SPRING
1603	2-381-632-02	o	ARM, LOCKER
1604	2-381-635-01	o	LEVER, LOCK
1605	2-381-636-01	o	KNOB
1606	2-381-637-02	o	SPRING
1607	2-381-638-02	o	SPRING
1608	2-381-640-02	o	DOG
1609	2-381-641-01	o	COLLAR
1610	2-381-642-02	o	MOUNT
1611	2-381-648-02	o	INSULATOR, KNOB
1612	2-381-652-01	o	SPRING, TENSION
1613	2-381-654-01	s	PIN, SPRING
1614	3-678-704-00	o	SPACER
1615	3-720-906-01	o	LID (S), REAR
1616	3-720-907-02	o	PIN (S), REAR
1617	3-720-908-01	o	TABLE (S), PIN, REAR
1618	3-720-909-02	o	KNOB, CRANK
1619	3-720-910-02	o	SHEET, SLIDE
1620	3-720-911-02	o	BASE, TRIPOD FITTING SCREW
1621	3-720-912-03	o	FRAME (S)
1622	OPTIONAL ACCESSORY: TRIPOD ADAPTOR VCT-14		

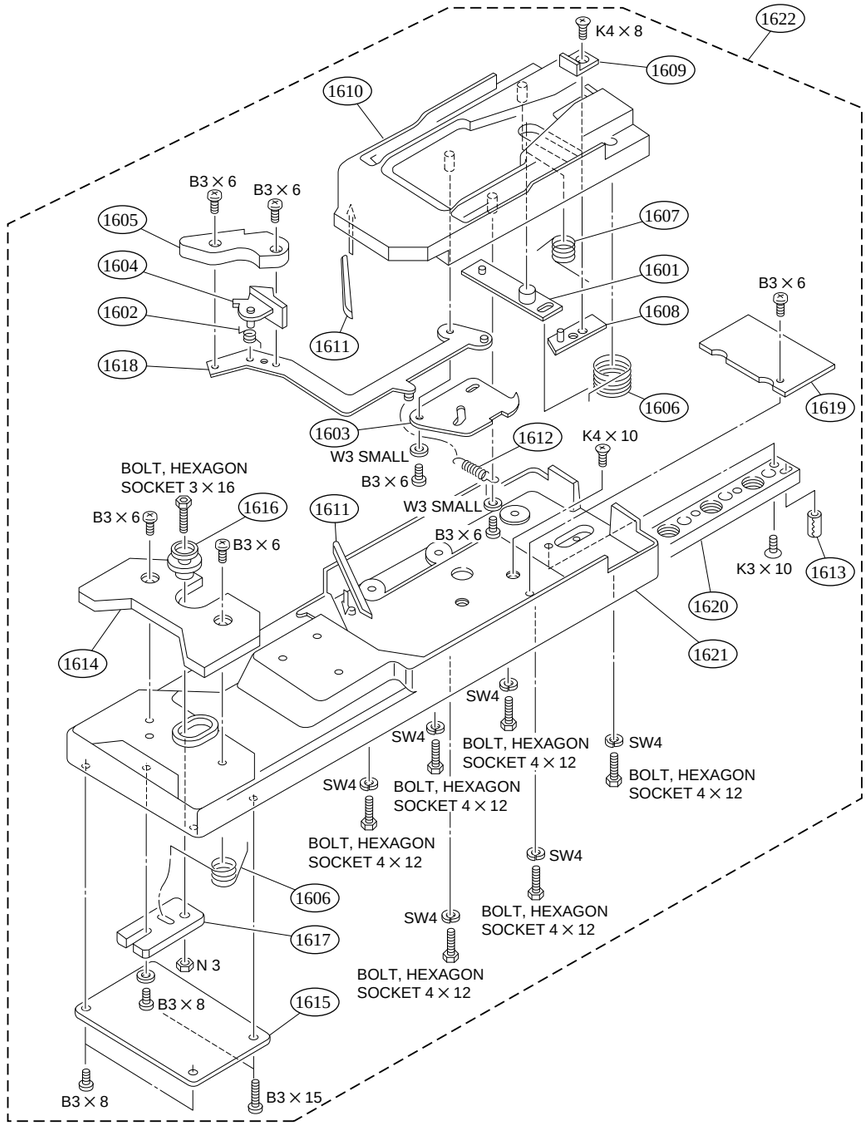

1-3. Electrical Parts List

```
-----------
AIF-8 BOARD  *For DNW-7/7P/90/90P/90WS/90WSP only
-----------
Ref. No.
or Q'ty  Part No.    SP Description

1pc      A-8277-734-A o MOUNTED CIRCUIT BOARD, AIF-8
1pc      1-956-454-11 o HARNESS, MA10-AIF100

C1       1-104-823-11 s TANTALUM, CHIP 47uF 20% 16V
C2       1-135-177-21 s TANTALUM, CHIP 1uF 10% 25V
C3       1-163-038-00 s CERAMIC 0.1uF 25V
C4       1-135-215-21 s TANTALUM, CHIP 6.8uF 10% 16V
C5       1-163-038-00 s CERAMIC 0.1uF 25V

C6       1-104-823-11 s TANTALUM, CHIP 47uF 20% 16V
C7       1-104-913-11 s TANTALUM, CHIP 10uF 20% 16V
C8       1-163-038-00 s CERAMIC 0.1uF 25V
C9       1-135-215-21 s TANTALUM, CHIP 6.8uF 10% 16V
C10      1-163-038-00 s CERAMIC 0.1uF 25V

C101     1-107-686-11 s TANTALUM, CHIP 4.7uF 20% 16V
C203     1-126-795-11 s ELECT 10uF 20% 50V
C204     1-163-275-11 s CERAMIC, CHIP 0.001uF 5% 50V
C205     1-126-795-11 s ELECT 10uF 20% 50V
C206     1-126-795-11 s ELECT 10uF 20% 50V

C207     1-163-037-11 s CERAMIC, CHIP 0.022uF 10% 25V
C208     1-163-251-11 s CERAMIC, CHIP 100PF 5% 50V
C209     1-163-251-11 s CERAMIC, CHIP 100PF 5% 50V
C210     1-163-037-11 s CERAMIC, CHIP 0.022uF 10% 25V

CN33     1-568-960-11 s CONNECTOR, PC BOARD 2P, MALE
CN100    1-566-758-11 o CONNECTOR, 3P, MALE
CN136    1-778-528-11 o CONNECTOR, PC BOARD 13P, MALE
CN137    1-566-767-11 s CONNECTOR, 12P, MALE
CN200    1-506-491-11 s CONNECTOR, 12P, MALE

CN300    1-580-536-11 s CONNECTOR, LY 14P, MALE

D1       8-719-157-20 s DIODE RD4.3M-B
D2       8-719-157-20 s DIODE RD4.3M-B
D101     8-719-800-76 s DIODE 1SS226
D201     8-719-800-76 s DIODE 1SS226
D202     8-719-800-76 s DIODE 1SS226

IC1      8-759-700-78 s IC NJM082M
IC2      8-759-710-88 s IC NJM431U
IC101    8-759-175-04 s IC PCF8574T-T
IC102    8-759-720-98 s IC X24C02P
IC103    8-759-700-07 s IC NJM2903M

IC201    8-759-700-84 s IC NJM2041M-D

L1       1-410-737-31 s INDUCTOR, CHIP 0.47uH
L2       1-410-737-31 s INDUCTOR, CHIP 0.47uH

Q1       8-729-020-94 s TRANSISTOR 2SA1314C-TE12L
Q2       8-729-808-42 s TRANSISTOR 2SD1624-T
Q101     8-729-027-38 s TRANSISTOR DTA144EKA-T146
Q201     8-729-271-31 s TRANSISTOR 2SC2713G

R1       1-216-683-11 s METAL, CHIP 22K 0.5% 1/10W
R2       1-216-661-11 s METAL, CHIP 2.7K 0.5% 1/10W
R3       1-216-683-11 s METAL, CHIP 22K 0.5% 1/10W
R4       1-216-691-11 s METAL, CHIP 47K 0.5% 1/10W
R5       1-216-691-11 s METAL, CHIP 47K 0.5% 1/10W

R6       1-216-647-11 s METAL, CHIP 680 0.5% 1/10W
R101     1-216-627-11 s METAL, CHIP 100 0.5% 1/10W
R102     1-216-651-11 s METAL, CHIP 1K 0.5% 1/10W
R103     1-216-651-11 s METAL, CHIP 1K 0.5% 1/10W
R104     1-216-651-11 s METAL, CHIP 1K 0.5% 1/10W
```



```
Ref. No.
or Q'ty  Part No.    SP Description

R105     1-216-651-11 s METAL, CHIP 1K 0.5% 1/10W
R108     1-216-699-11 s METAL, CHIP 100K 0.5% 1/10W
R109     1-216-699-11 s METAL, CHIP 100K 0.5% 1/10W
R110     1-216-699-11 s METAL, CHIP 100K 0.5% 1/10W
R111     1-216-651-11 s METAL, CHIP 1K 0.5% 1/10W

R112     1-216-651-11 s METAL, CHIP 1K 0.5% 1/10W
R114     1-216-651-11 s METAL, CHIP 1K 0.5% 1/10W
R115     1-216-651-11 s METAL, CHIP 1K 0.5% 1/10W
R116     1-218-728-11 s METAL, CHIP 33K 0.50% 1/16W
R117     1-218-716-11 s METAL, CHIP 10K 0.50% 1/16W

R118     1-218-726-11 s METAL, CHIP 27K 0.50% 1/16W
R119     1-218-716-11 s METAL, CHIP 10K 0.50% 1/16W
R120     1-216-685-11 s METAL, CHIP 27K 0.5% 1/10W
R121     1-218-692-11 s METAL, CHIP 1K 0.50% 1/16W
R122     1-218-692-11 s METAL, CHIP 1K 0.50% 1/16W

R201     1-216-685-11 s METAL, CHIP 27K 0.5% 1/10W
R202     1-215-439-00 s METAL 5.6K 1% 1/6W
R203     1-215-439-00 s METAL 5.6K 1% 1/6W
R210     1-216-699-11 s METAL, CHIP 100K 0.5% 1/10W
R211     1-216-699-11 s METAL, CHIP 100K 0.5% 1/10W

R212     1-216-637-11 s METAL, CHIP 270 0.5% 1/10W
R213     1-216-651-11 s METAL, CHIP 1K 0.5% 1/10W
R214     1-216-663-11 s METAL, CHIP 3.3K 0.5% 1/10W
R215     1-216-663-11 s METAL, CHIP 3.3K 0.5% 1/10W
R216     1-216-653-11 s METAL, CHIP 1.2K 0.5% 1/10W

R217     1-216-653-11 s METAL, CHIP 1.2K 0.5% 1/10W
```

AL-40 BOARD

Ref. No. or Q'ty	Part No.	SP	Description
1pc	1-662-343-11	o	PRINTED CIRCUIT BOARD, AL-40
C1	1-164-227-11	s	CERAMIC, CHIP 0.022uF 10% 25V
C2	1-164-227-11	s	CERAMIC, CHIP 0.022uF 10% 25V
C3	1-162-915-11	s	CERAMIC, CHIP 10PF 50V
C4	1-162-915-11	s	CERAMIC, CHIP 10PF 50V
C5	1-126-925-11	s	ELECT 470uF 20% 10V
C6	1-126-925-11	s	ELECT 470uF 20% 10V
C7	1-164-227-11	s	CERAMIC, CHIP 0.022uF 10% 25V
CN1	1-568-353-21	o	CONNECTOR, BOARD TO BOARD 6P
CN2	1-568-353-21	o	CONNECTOR, BOARD TO BOARD 6P
D1	8-719-941-23	s	DIODE DA204U
D2	8-719-941-23	s	DIODE DA204U
IC1	8-759-700-94	s	IC NJM5532M
Q1	8-729-209-07	s	TRANSISTOR 2SC4213-B
Q2	8-729-209-07	s	TRANSISTOR 2SC4213-B
R1-6	1-218-708-11	s	METAL, CHIP 4.7K 0.50% 1/16W
R7	1-218-715-11	s	METAL, CHIP 9.1K 0.50% 1/16W
R8	1-218-715-11	s	METAL, CHIP 9.1K 0.50% 1/16W
R9	1-218-660-11	s	METAL, CHIP 47 0.50% 1/16W
R10	1-218-660-11	s	METAL, CHIP 47 0.50% 1/16W
R11	1-218-710-11	s	METAL, CHIP 5.6K 0.50% 1/16W
R12	1-218-710-11	s	METAL, CHIP 5.6K 0.50% 1/16W
R13	1-218-692-11	s	METAL, CHIP 1K 0.50% 1/16W
R14	1-218-692-11	s	METAL, CHIP 1K 0.50% 1/16W
R15	1-218-740-11	s	METAL, CHIP 100K 0.50% 1/16W

AXM-14 BOARD

Ref. No. or Q'ty	Part No.	SP	Description
1pc	A-8277-535-A	o	MOUNTED CIRCUIT BOARD, AXM-14 [For UC, EK]
	A-8277-569-A	o	MOUNTED CIRCUIT BOARD, AXM-14 [For J]
C3	1-126-405-11	s	ELECT, CHIP 10uF 20% 50V
C6	1-126-405-11	s	ELECT, CHIP 10uF 20% 50V
C101	1-163-133-00	s	CERAMIC, CHIP 470PF 5% 50V
C102	1-163-133-00	s	CERAMIC, CHIP 470PF 5% 50V
C103	1-126-405-11	s	ELECT, CHIP 10uF 20% 50V
C104	1-126-405-11	s	ELECT, CHIP 10uF 20% 50V
C105	1-163-243-11	s	CERAMIC, CHIP 47PF 5% 50V
C106	1-163-243-11	s	CERAMIC, CHIP 47PF 5% 50V
C107	1-163-037-11	s	CERAMIC, CHIP 0.022uF 10% 25V
C108	1-163-037-11	s	CERAMIC, CHIP 0.022uF 10% 25V
C109	1-163-251-11	s	CERAMIC, CHIP 100PF 5% 50V [For J]
C110	1-163-251-11	s	CERAMIC, CHIP 100PF 5% 50V [For UC, EK]
C111	1-163-251-11	s	CERAMIC, CHIP 100PF 5% 50V
C112	1-163-275-11	s	CERAMIC, CHIP 0.001uF 5% 50V
C123	1-163-037-11	s	CERAMIC, CHIP 0.022uF 10% 25V
C124	1-163-037-11	s	CERAMIC, CHIP 0.022uF 10% 25V
C201	1-163-133-00	s	CERAMIC, CHIP 470PF 5% 50V
C202	1-163-133-00	s	CERAMIC, CHIP 470PF 5% 50V
C203	1-126-405-11	s	ELECT, CHIP 10uF 20% 50V
C204	1-126-405-11	s	ELECT, CHIP 10uF 20% 50V
C205	1-163-243-11	s	CERAMIC, CHIP 47PF 5% 50V
C206	1-163-243-11	s	CERAMIC, CHIP 47PF 5% 50V
C207	1-163-037-11	s	CERAMIC, CHIP 0.022uF 10% 25V
C208	1-163-037-11	s	CERAMIC, CHIP 0.022uF 10% 25V
C209	1-163-251-11	s	CERAMIC, CHIP 100PF 5% 50V [For J]
C210	1-163-251-11	s	CERAMIC, CHIP 100PF 5% 50V [For UC, EK]
C211	1-163-251-11	s	CERAMIC, CHIP 100PF 5% 50V
C212	1-163-275-11	s	CERAMIC, CHIP 0.001uF 5% 50V
CN100	1-573-593-11	s	CONNECTOR, XLR 3P, MALE [For J]
	1-573-594-11	s	CONNECTOR, XLR 3P, FEMALE [For UC, EK]
CN200	1-573-593-11	s	CONNECTOR, XLR 3P, MALE [For J]
	1-573-594-11	s	CONNECTOR, XLR 3P, FEMALE [For UC, EK]
CN301	1-774-795-11	s	CONNECTOR, XLR 5P, MALE
D101	8-719-800-76	s	DIODE 1SS226
D102	8-719-800-76	s	DIODE 1SS226
D201	8-719-800-76	s	DIODE 1SS226
D202	8-719-800-76	s	DIODE 1SS226
FL300	1-239-895-12	s	FILTER, EMI (SMD)
FL301	1-239-895-12	s	FILTER, EMI (SMD)
FL302	1-239-895-12	s	FILTER, EMI (SMD)
FL303	1-239-895-12	s	FILTER, EMI (SMD)
IC101	8-759-700-84	s	IC NJM2041M-D
IC201	8-759-700-84	s	IC NJM2041M-D
L101	1-412-137-11	s	INDUCTOR 10uH
L102	1-412-137-11	s	INDUCTOR 10uH
L201	1-412-137-11	s	INDUCTOR 10uH
L202	1-412-137-11	s	INDUCTOR 10uH
Q3	8-729-271-31	s	TRANSISTOR 2SC2713G [For UC, EK]
Q4	8-729-271-31	s	TRANSISTOR 2SC2713G [For UC, EK]
R5	1-216-685-11	s	METAL, CHIP 27K 0.5% 1/10W

http://getMANUAL.com

(AXM-14 BOARD)

Ref. No. or Q'ty	Part No.	SP	Description
R6	1-216-685-11	s	METAL, CHIP 27K 0.5% 1/10W
R100	1-216-637-11	s	METAL, CHIP 270 0.5% 1/10W
R101-106	1-216-659-11	s	METAL, CHIP 2.2K 0.5% 1/10W
R107	1-216-636-11	s	METAL, CHIP 240 0.5% 1/10W
R108	1-216-636-11	s	METAL, CHIP 240 0.5% 1/10W
R109	1-216-663-11	s	METAL, CHIP 3.3K 0.5% 1/10W
R110	1-216-699-11	s	METAL, CHIP 100K 0.5% 1/10W
R111	1-216-699-11	s	METAL, CHIP 100K 0.5% 1/10W
R112	1-216-637-11	s	METAL, CHIP 270 0.5% 1/10W
R114	1-216-651-11	s	METAL, CHIP 1K 0.5% 1/10W
R115	1-216-663-11	s	METAL, CHIP 3.3K 0.5% 1/10W
R116	1-216-663-11	s	METAL, CHIP 3.3K 0.5% 1/10W
R119	1-216-636-11	s	METAL, CHIP 240 0.5% 1/10W
R120	1-216-636-11	s	METAL, CHIP 240 0.5% 1/10W
R121	1-216-295-91	s	RES, CHIP 0 [For UC, EK]
R122	1-216-295-91	s	RES, CHIP 0 [For UC, EK]
R123	1-216-295-91	s	RES, CHIP 0 [For J]
R124	1-216-295-91	s	RES, CHIP 0 [For J]
R200	1-216-637-11	s	METAL, CHIP 270 0.5% 1/10W
R201-206	1-216-659-11	s	METAL, CHIP 2.2K 0.5% 1/10W
R207	1-216-636-11	s	METAL, CHIP 240 0.5% 1/10W
R208	1-216-636-11	s	METAL, CHIP 240 0.5% 1/10W
R209	1-216-663-11	s	METAL, CHIP 3.3K 0.5% 1/10W
R210	1-216-699-11	s	METAL, CHIP 100K 0.5% 1/10W
R211	1-216-699-11	s	METAL, CHIP 100K 0.5% 1/10W
R212	1-216-637-11	s	METAL, CHIP 270 0.5% 1/10W
R214	1-216-651-11	s	METAL, CHIP 1K 0.5% 1/10W
R215	1-216-663-11	s	METAL, CHIP 3.3K 0.5% 1/10W
R216	1-216-663-11	s	METAL, CHIP 3.3K 0.5% 1/10W
R219	1-216-636-11	s	METAL, CHIP 240 0.5% 1/10W
R220	1-216-636-11	s	METAL, CHIP 240 0.5% 1/10W
R221	1-216-295-91	s	RES, CHIP 0 [For UC, EK]
R222	1-216-295-91	s	RES, CHIP 0 [For UC, EK]
R223	1-216-295-91	s	RES, CHIP 0 [For J]
R224	1-216-295-91	s	RES, CHIP 0 [For J]
R316	1-216-295-91	s	RES, CHIP 0
R317	1-216-295-91	s	RES, CHIP 0
S101	1-572-042-11	s	SWITCH, SLIDE
S201	1-572-042-11	s	SWITCH, SLIDE

BI-96(B)/96(R) BOARD *For DNW-7/7P/90/90P/90WS/90WSP only

Ref. No. or Q'ty	Part No.	SP	Description
1pc	1-562-735-11	o	HOUSING 2P
1pc	1-563-088-11	o	CONTACT, FEMALE, AWG24-30
1pc	1-569-195-11	o	HOUSING 2P
C1	1-113-992-11	s	TANTALUM, CHIP 3.3uF 20% 35V
C2	1-113-992-11	s	TANTALUM, CHIP 3.3uF 20% 35V
C3	1-113-992-11	s	TANTALUM, CHIP 3.3uF 20% 35V
C5	1-163-038-00	s	CERAMIC 0.1uF 25V
C6	1-163-038-00	s	CERAMIC 0.1uF 25V
C7	1-164-232-11	s	CERAMIC, CHIP 0.01uF 10% 100V
C8	1-107-687-11	s	TANTALUM, CHIP 3.3uF 20% 20V
C9	1-107-687-11	s	TANTALUM, CHIP 3.3uF 20% 20V
C10	1-107-687-11	s	TANTALUM, CHIP 3.3uF 20% 20V
C11	1-113-992-11	s	TANTALUM, CHIP 3.3uF 20% 35V
C12	1-163-038-00	s	CERAMIC 0.1uF 25V
C14	1-163-038-00	s	CERAMIC 0.1uF 25V
C16	1-107-687-11	s	TANTALUM, CHIP 3.3uF 20% 20V
D1	8-719-800-76	s	DIODE 1SS226
D2	8-719-157-33	s	DIODE RD6.2M-B
D3	8-719-104-34	s	DIODE 1S2835
D4	8-719-104-34	s	DIODE 1S2835
D5	8-719-800-76	s	DIODE 1SS226
Q1	8-729-421-71	s	TRANSISTOR 2SK620
Q2	8-729-116-66	s	TRANSISTOR 2SK508-K53
Q3	8-729-140-47	s	TRANSISTOR 2SC3735-B34
Q4	8-729-112-65	s	TRANSISTOR 2SA1462-Y33
R2	1-218-776-11	s	METAL 1M 0.5% 1/10W
R3	1-218-776-11	s	METAL 1M 0.5% 1/10W
R4	1-216-295-91	s	RES, CHIP 0
R5	1-216-295-91	s	RES, CHIP 0
R6	1-216-699-11	s	METAL, CHIP 100K 0.5% 1/10W
R7	1-216-699-11	s	METAL, CHIP 100K 0.5% 1/10W
R8	1-216-690-11	s	METAL, CHIP 43K 0.5% 1/10W
R9	1-216-699-11	s	METAL, CHIP 100K 0.5% 1/10W
R10	1-216-675-11	s	METAL, CHIP 10K 0.5% 1/10W
R11	1-216-648-11	s	METAL, CHIP 750 0.5% 1/10W
R12	1-216-678-11	s	METAL, CHIP 13K 0.5% 1/10W
R13	1-216-687-11	s	METAL, CHIP 33K 0.5% 1/10W
R14	1-216-627-11	s	METAL, CHIP 100 0.5% 1/10W
R15	1-216-663-11	s	METAL, CHIP 3.3K 0.5% 1/10W
R17	1-216-603-11	s	METAL, CHIP 10 0.5% 1/10W
R31	1-216-295-91	s	RES, CHIP 0

BI-96(G) BOARD *For DNW-7/7P/90/90P/90WS/90WSP only

Ref. No. or Q'ty	Part No.	SP	Description
1pc	1-562-735-11	o	HOUSING 2P
1pc	1-563-088-11	o	CONTACT, FEMALE, AWG24-30
1pc	1-569-195-11	o	HOUSING 2P
C1	1-113-992-11	s	TANTALUM, CHIP 3.3uF 20% 35V
C2	1-113-992-11	s	TANTALUM, CHIP 3.3uF 20% 35V
C3	1-113-992-11	s	TANTALUM, CHIP 3.3uF 20% 35V
C5	1-163-038-00	s	CERAMIC 0.1uF 25V
C6	1-163-038-00	s	CERAMIC 0.1uF 25V
C7	1-164-232-11	s	CERAMIC, CHIP 0.01uF 10% 100V
C8	1-107-687-11	s	TANTALUM, CHIP 3.3uF 20% 20V
C9	1-107-687-11	s	TANTALUM, CHIP 3.3uF 20% 20V
C10	1-107-687-11	s	TANTALUM, CHIP 3.3uF 20% 20V
C11	1-113-992-11	s	TANTALUM, CHIP 3.3uF 20% 35V
C12	1-163-038-00	s	CERAMIC 0.1uF 25V
C13	1-113-985-11	s	TANTALUM, CHIP 10uF 20% 20V
C14	1-163-038-00	s	CERAMIC 0.1uF 25V
C16	1-107-687-11	s	TANTALUM, CHIP 3.3uF 20% 20V
D1	8-719-800-76	s	DIODE 1SS226
D2	8-719-157-33	s	DIODE RD6.2M-B
D3	8-719-104-34	s	DIODE 1S2835
D4	8-719-104-34	s	DIODE 1S2835
D5	8-719-800-76	s	DIODE 1SS226
IC1	8-759-075-53	s	IC LM35DM
Q1	8-729-421-71	s	TRANSISTOR 2SK620
Q2	8-729-116-66	s	TRANSISTOR 2SK508-K53
Q3	8-729-140-47	s	TRANSISTOR 2SC3735-B34
Q4	8-729-112-65	s	TRANSISTOR 2SA1462-Y33
R2	1-218-776-11	s	METAL 1M 0.5% 1/10W
R3	1-218-776-11	s	METAL 1M 0.5% 1/10W
R4	1-216-295-91	s	RES, CHIP 0
R5	1-216-295-91	s	RES, CHIP 0
R6	1-216-699-11	s	METAL, CHIP 100K 0.5% 1/10W
R7	1-216-699-11	s	METAL, CHIP 100K 0.5% 1/10W
R8	1-216-690-11	s	METAL, CHIP 43K 0.5% 1/10W
R9	1-216-699-11	s	METAL, CHIP 100K 0.5% 1/10W
R10	1-216-675-11	s	METAL, CHIP 10K 0.5% 1/10W
R11	1-216-648-11	s	METAL, CHIP 750 0.5% 1/10W
R12	1-216-678-11	s	METAL, CHIP 13K 0.5% 1/10W
R13	1-216-687-11	s	METAL, CHIP 33K 0.5% 1/10W
R14	1-216-627-11	s	METAL, CHIP 100 0.5% 1/10W
R15	1-216-663-11	s	METAL, CHIP 3.3K 0.5% 1/10W
R16	1-216-624-11	s	METAL, CHIP 75 0.5% 1/10W
R17	1-216-603-11	s	METAL, CHIP 10 0.5% 1/10W
R31	1-216-295-91	s	RES, CHIP 0

CI-12 BOARD

Ref. No. or Q'ty	Part No.	SP	Description
1pc	A-8277-531-A	o	MOUNTED CIRCUIT BOARD, CI-12
2pcs	3-729-061-01	s	SCREW M2X4.5 (TYPE 1)
C97	1-107-826-11	s	CERAMIC, CHIP 0.1uF 10% 16V
C101	1-164-227-11	s	CERAMIC, CHIP 0.022uF 10% 25V
C102	1-164-227-11	s	CERAMIC, CHIP 0.022uF 10% 25V
CN1	1-778-535-11	o	CONNECTOR, FFC (ZIF) 45P
CN2	1-760-394-11	o	CONNECTOR, BOARD TO BOARD 40P
IC101	8-759-079-87	s	IC TC74VHC245FS(EL)
IC102	8-759-079-87	s	IC TC74VHC245FS(EL)
IC103	8-759-079-87	s	IC TC74VHC245FS(EL)
L101	1-412-174-11	s	INDUCTOR 1uH
R101	1-218-668-11	s	METAL, CHIP 100 0.50% 1/16W
R102	1-218-668-11	s	METAL, CHIP 100 0.50% 1/16W
R103	1-218-656-11	s	METAL, CHIP 33 0.50% 1/16W
RB101	1-236-907-11	s	NETWORK RESISTOR (CHIP) 100K
RB102	1-236-907-11	s	NETWORK RESISTOR (CHIP) 100K
RB103	1-236-907-11	s	NETWORK RESISTOR (CHIP) 100K
RB104	1-236-907-11	s	NETWORK RESISTOR (CHIP) 100K
RB105	1-239-412-11	s	NETWORK RESISTOR (CHIP) 100
RB106	1-239-412-11	s	NETWORK RESISTOR (CHIP) 100
RB107	1-239-412-11	s	NETWORK RESISTOR (CHIP) 100

CN-1183 BOARD *For DNW-7/7P/90/90P/90WS/90WSP only

Ref. No. or Q'ty	Part No.	SP	Description
1pc	A-8277-768-A	o	MOUNTED CIRCUIT BOARD, CN-1183
C1	1-104-823-11	s	TANTALUM, CHIP 47uF 20% 16V
C2	1-104-823-11	s	TANTALUM, CHIP 47uF 20% 16V
C3	1-164-156-11	s	CERAMIC, CHIP 0.1uF 25V
C4	1-164-156-11	s	CERAMIC, CHIP 0.1uF 25V
C5	1-126-936-11	s	ELECT 3300uF 20% 16V
CN1	1-770-678-11	o	CONNECTOR, BOARD TO BOARD 50P
CN2	1-695-950-21	o	CONNECTER, FPC (ZIF) 21P
CN3	1-695-950-21	o	CONNECTER, FPC (ZIF) 21P
CN4	1-695-950-21	o	CONNECTER, FPC (ZIF) 21P
D1-6	8-719-800-76	s	DIODE 1SS226
IC1	8-759-242-51	s	IC TC74AC86F
IC2	8-759-242-51	s	IC TC74AC86F
R2	1-218-648-11	s	METAL, CHIP 15 0.50% 1/16W
R3	1-218-644-11	s	METAL, CHIP 10 0.50% 1/16W
R4	1-218-648-11	s	METAL, CHIP 15 0.50% 1/16W
R6	1-218-648-11	s	METAL, CHIP 15 0.50% 1/16W
R8	1-218-648-11	s	METAL, CHIP 15 0.50% 1/16W
R10	1-218-648-11	s	METAL, CHIP 15 0.50% 1/16W
R12	1-218-648-11	s	METAL, CHIP 15 0.50% 1/16W
R14	1-216-864-11	s	METAL, CHIP 0 5% 1/16W
R37	1-216-864-11	s	METAL, CHIP 0 5% 1/16W
R38	1-216-864-11	s	METAL, CHIP 0 5% 1/16W
R39	1-216-864-11	s	METAL, CHIP 0 5% 1/16W

CN-1193 BOARD *For DNW-7/7P/90/90P only

Ref. No. or Q'ty	Part No.	SP	Description
1pc	A-8277-735-A	o	MOUNTED CIRCUIT BOARD, CN-1193
CN1	1-778-537-11	o	CONNECTOR, BOARD TO BOARD 66P
CN2	1-778-537-11	o	CONNECTOR, BOARD TO BOARD 66P

CNB-1/1A BOARD

Ref. No. or Q'ty	Part No.	SP	Description
1pc	A-8277-538-A	o	MOUNTED CIRCUIT BOARD, CNB-1A [For DNV-5 (UC, EK)]
	A-8277-567-A	o	MOUNTED CIRCUIT BOARD, CNB-1A [For DNV-5 (J)]
	A-8277-570-A	o	MOUNTED CIRCUIT BOARD, CNB-1 [For UC/EK except DNV-5]
	A-8277-571-A	o	MOUNTED CIRCUIT BOARD, CNB-1 [For J except DNV-5]
1pc	1-562-255-00	o	HOUSING, 5P [For DNV-5]
1pc	1-562-260-11	o	CONTACT, SOCKET [For DNV-5]
1pc	7-623-507-01	s	LUG, 2.6
C101	1-128-548-11	s	ELECT 4700uF 20% 25V
C102	1-128-548-11	s	ELECT 4700uF 20% 25V
C103	1-164-232-11	s	CERAMIC, CHIP 0.01uF 10% 100V
C104	1-163-023-00	s	CERAMIC, CHIP 0.015uF 5% 50V
C201	1-164-227-11	s	CERAMIC, CHIP 0.022uF 10% 25V
C202	1-164-227-11	s	CERAMIC, CHIP 0.022uF 10% 25V
C203	1-104-913-11	s	TANTALUM, CHIP 10uF 20% 16V
C204	1-104-913-11	s	TANTALUM, CHIP 10uF 20% 16V
C205	1-164-227-11	s	CERAMIC, CHIP 0.022uF 10% 25V
C206	1-164-227-11	s	CERAMIC, CHIP 0.022uF 10% 25V
C207	1-135-177-21	s	TANTALUM, CHIP 1uF 10% 25V
C209	1-113-994-11	s	TANTALUM, CHIP 6.8uF 20% 16V
C210	1-104-851-11	s	TANTALUM, CHIP 10uF 20% 10V
C211	1-104-851-11	s	TANTALUM, CHIP 10uF 20% 10V
C212	1-164-227-11	s	CERAMIC, CHIP 0.022uF 10% 25V
C213	1-163-227-11	s	CERAMIC, CHIP 10PF 5% 50V
C214	1-126-925-11	s	ELECT 470uF 20% 10V
C215	1-163-227-11	s	CERAMIC, CHIP 10PF 5% 50V
C216	1-164-227-11	s	CERAMIC, CHIP 0.022uF 10% 25V
C217	1-126-925-11	s	ELECT 470uF 20% 10V
C218	1-164-227-11	s	CERAMIC, CHIP 0.022uF 10% 25V
C219	1-104-851-11	s	TANTALUM, CHIP 10uF 20% 10V
C220	1-104-851-11	s	TANTALUM, CHIP 10uF 20% 10V
C301	1-164-227-11	s	CERAMIC, CHIP 0.022uF 10% 25V
CB101 ⚠	1-533-481-11	s	BREAKER, CIRCUIT [Except DNV-5]
⚠	1-532-525-00	s	BREAKER, CIRCUIT 6.3A 125V [For DNV-5]
CN101	1-778-541-11	o	CONNECTOR, BOARD TO BOARD 52P
CN102	1-566-982-11	o	CONNECTOR, ILS 9P, MALE
CN103	1-564-718-11	o	CONNECTOR, 2P, MALE
CN104	1-564-722-11	o	CONNECTOR, 6P, MALE
CN105	1-564-720-11	o	CONNECTOR, 4P, MALE
CN107	1-691-550-11	s	PIN, CONNECTOR (1.5MM)(SMD) 3P
CN108	1-766-376-11	o	PIN, CONNECTOR (1.5MM)(SMD) 9P
CN111	1-568-330-11	s	CONNECTOR, BOARD TO BOARD 6P
CN112	1-568-330-11	s	CONNECTOR, BOARD TO BOARD 6P
D101	8-719-030-03	s	DIODE EA60QC06-TE16F2
D102	8-719-030-03	s	DIODE EA60QC06-TE16F2
D201	8-719-029-63	s	DIODE RD4.3UH-T1
D202	8-719-029-63	s	DIODE RD4.3UH-T1
D203	8-719-941-23	s	DIODE DA204U
D204	8-719-941-23	s	DIODE DA204U
D301-308	8-719-941-23	s	DIODE DA204U
F101 ⚠	1-533-282-21	s	LINK, IC

(CNB-1/1A BOARD)

Ref. No. or Q'ty	Part No.	SP	Description
IC101	8-729-039-34	s	TRANSISTOR SI4435DY-T1
IC102	8-729-039-34	s	TRANSISTOR SI4435DY-T1
IC103	8-729-039-34	s	TRANSISTOR SI4435DY-T1
IC201	8-759-700-78	s	IC NJM082M
IC202	8-759-710-88	s	IC NJM431U
IC301	8-759-700-94	s	IC NJM5532M
L201	1-410-737-31	s	INDUCTOR, CHIP 0.47uH
L202	1-410-737-31	s	INDUCTOR, CHIP 0.47uH
Q201	8-729-020-94	s	TRANSISTOR 2SA1314C-TE12L
Q202	8-729-808-42	s	TRANSISTOR 2SD1624-T
Q203	8-729-209-07	s	TRANSISTOR 2SC4213-B
Q204	8-729-209-07	s	TRANSISTOR 2SC4213-B
R101	1-218-740-11	s	METAL, CHIP 100K 0.50% 1/16W
R102	1-218-676-11	s	METAL, CHIP 220 0.50% 1/16W
R201	1-218-688-11	s	METAL, CHIP 680 0.50% 1/16W
R203	1-218-724-11	s	METAL, CHIP 22K 0.50% 1/16W
R204	1-218-702-11	s	METAL, CHIP 2.7K 0.50% 1/16W
R205	1-218-724-11	s	METAL, CHIP 22K 0.50% 1/16W
R206	1-218-732-11	s	METAL, CHIP 47K 0.50% 1/16W
R207	1-218-732-11	s	METAL, CHIP 47K 0.50% 1/16W
R208	1-218-715-11	s	METAL, CHIP 9.1K 0.50% 1/16W
R209	1-218-708-11	s	METAL, CHIP 4.7K 0.50% 1/16W
R210	1-218-660-11	s	METAL, CHIP 47 0.50% 1/16W
R211	1-218-708-11	s	METAL, CHIP 4.7K 0.50% 1/16W
R212	1-218-708-11	s	METAL, CHIP 4.7K 0.50% 1/16W
R213	1-218-692-11	s	METAL, CHIP 1K 0.50% 1/16W
R214	1-218-710-11	s	METAL, CHIP 5.6K 0.50% 1/16W
R215	1-218-710-11	s	METAL, CHIP 5.6K 0.50% 1/16W
R216	1-218-715-11	s	METAL, CHIP 9.1K 0.50% 1/16W
R217	1-218-708-11	s	METAL, CHIP 4.7K 0.50% 1/16W
R218	1-218-692-11	s	METAL, CHIP 1K 0.50% 1/16W
R219	1-218-660-11	s	METAL, CHIP 47 0.50% 1/16W
R220	1-218-740-11	s	METAL, CHIP 100K 0.50% 1/16W
R221	1-218-708-11	s	METAL, CHIP 4.7K 0.50% 1/16W
R222	1-218-708-11	s	METAL, CHIP 4.7K 0.50% 1/16W
R301	1-216-864-11	s	METAL, CHIP 0 5% 1/16W [For J]
R302	1-218-724-11	s	METAL, CHIP 22K 0.50% 1/16W

CO-22 BOARD

Ref. No. or Q'ty	Part No.	SP	Description
1pc	1-662-337-11	o	PRINTED CIRCUIT BOARD, CO-22
1pc	3-603-544-01	o	SUPPORT B,BNC CONNECTOR
CN1	1-565-875-11	o	CONNECTOR, 3P, MALE
CN2	1-766-380-11	s	CONNECTOR, COAXIAL
FL1	1-239-896-12	s	FILTER, EMI (SMD)

CT-185 BOARD *For DNV-5 only

Ref. No. or Q'ty	Part No.	SP	Description
1pc	1-662-480-11	o	PRINTED CIRCUIT BOARD, CT-185
C100	1-164-232-11	s	CERAMIC, CHIP 0.01uF 10% 100V
C101	1-115-339-11	s	CERAMIC 0.1uF 10% 50V
C102	1-115-339-11	s	CERAMIC 0.1uF 10% 50V
CN1	1-564-707-11	o	CONNECTOR, 5P, MALE
CN2	1-564-720-11	o	CONNECTOR, 4P, MALE
IC100	8-729-039-34	s	TRANSISTOR SI4435DY-T1
IC101	8-729-039-34	s	TRANSISTOR SI4435DY-T1
IC102	8-729-039-34	s	TRANSISTOR SI4435DY-T1
R100	1-216-635-11	s	METAL, CHIP 220 0.5% 1/10W
R101	1-216-699-11	s	METAL, CHIP 100K 0.5% 1/10W

CT-187 BOARD *For DNV-5 only

Ref. No. or Q'ty	Part No.	SP	Description
1pc	A-8311-256-A	o	MOUNTED CIRCUIT BOARD, CT-187
C1	1-164-156-11	s	CERAMIC, CHIP 0.1uF 25V
C2	1-113-991-11	s	TANTALUM, CHIP 33uF 20% 16V
C3	1-164-156-11	s	CERAMIC, CHIP 0.1uF 25V
C4	1-164-156-11	s	CERAMIC, CHIP 0.1uF 25V
C5	1-164-227-11	s	CERAMIC, CHIP 0.022uF 10% 25V
C6	1-164-156-11	s	CERAMIC, CHIP 0.1uF 25V
C7	1-164-227-11	s	CERAMIC, CHIP 0.022uF 10% 25V
C8	1-162-964-11	s	CERAMIC, CHIP 0.001uF 10% 50V
C9	1-164-227-11	s	CERAMIC, CHIP 0.022uF 10% 25V
C10	1-113-642-11	s	TANTALUM, CHIP 47uF 20% 10V
C11	1-164-227-11	s	CERAMIC, CHIP 0.022uF 10% 25V
C12	1-162-915-11	s	CERAMIC, CHIP 10PF 50V
C13	1-113-642-11	s	TANTALUM, CHIP 47uF 20% 10V
C14	1-162-915-11	s	CERAMIC, CHIP 10PF 50V
C15	1-164-227-11	s	CERAMIC, CHIP 0.022uF 10% 25V
C16	1-164-227-11	s	CERAMIC, CHIP 0.022uF 10% 25V
C17	1-162-915-11	s	CERAMIC, CHIP 10PF 50V
C18	1-162-915-11	s	CERAMIC, CHIP 10PF 50V
C19	1-164-227-11	s	CERAMIC, CHIP 0.022uF 10% 25V
C20	1-164-227-11	s	CERAMIC, CHIP 0.022uF 10% 25V
C21	1-113-642-11	s	TANTALUM, CHIP 47uF 20% 10V
C22-33	1-164-227-11	s	CERAMIC, CHIP 0.022uF 10% 25V
C34	1-164-156-11	s	CERAMIC, CHIP 0.1uF 25V
C35	1-113-642-11	s	TANTALUM, CHIP 47uF 20% 10V
C36	1-164-227-11	s	CERAMIC, CHIP 0.022uF 10% 25V
C37	1-113-642-11	s	TANTALUM, CHIP 47uF 20% 10V
C38	1-113-642-11	s	TANTALUM, CHIP 47uF 20% 10V
C39	1-164-227-11	s	CERAMIC, CHIP 0.022uF 10% 25V
C40	1-164-227-11	s	CERAMIC, CHIP 0.022uF 10% 25V
C41	1-113-642-11	s	TANTALUM, CHIP 47uF 20% 10V
C42	1-164-156-11	s	CERAMIC, CHIP 0.1uF 25V
C43	1-164-156-11	s	CERAMIC, CHIP 0.1uF 25V
C44	1-164-156-11	s	CERAMIC, CHIP 0.1uF 25V
C45	1-164-156-11	s	CERAMIC, CHIP 0.1uF 25V
C46	1-164-227-11	s	CERAMIC, CHIP 0.022uF 10% 25V
C47	1-104-823-11	s	TANTALUM, CHIP 47uF 20% 16V
C48	1-164-156-11	s	CERAMIC, CHIP 0.1uF 25V
C49	1-164-227-11	s	CERAMIC, CHIP 0.022uF 10% 25V
C50	1-164-156-11	s	CERAMIC, CHIP 0.1uF 25V
C51	1-164-156-11	s	CERAMIC, CHIP 0.1uF 25V
D1	8-719-820-41	s	DIODE 1SS302
D2	8-719-820-41	s	DIODE 1SS302
D3	8-719-948-47	s	DIODE HSM88AS
D4	8-719-948-47	s	DIODE HSM88AS
D10	8-719-948-47	s	DIODE HSM88AS
IC1	8-759-252-59	s	IC MAX202CSE
IC2	8-759-242-78	s	IC TC7W02F
IC3	8-759-149-10	s	IC UPD4702G
IC6	8-759-399-47	s	IC HD6435348SY00F
IC7	8-759-079-52	s	IC TC74VHC08FS(EL)
IC8	8-759-079-72	s	IC TC74VHC139FS(EL)
IC9	8-759-079-70	s	IC TC74VHC138FS(EL)
IC10	8-759-079-70	s	IC TC74VHC138FS(EL)
IC11	8-759-078-75	s	IC UPD6453GT-610
IC12	8-759-186-32	s	TC74VHC21F

(CT-187 BOARD)

Ref. No. or Q'ty	Part No.	SP	Description
IC14	8-752-364-91	s	IC CXK58257BM-10LL
IC15	8-759-399-56	s	IC STK12C68-S45
IC16	8-759-165-37	s	IC X24164SIC7000
IC17	8-759-078-75	s	IC UPD6453GT-610
IC18	8-759-348-79	s	IC TE7751
IC19	8-759-086-41	s	IC X24C02S-3.0
IC20	8-759-635-27	s	IC M62352GP
IC21	8-759-079-52	s	IC TC74VHC08FS(EL)
IC22	8-759-080-02	s	IC TC74VHC541FS(EL)
IC23	8-759-079-52	s	IC TC74VHC08FS(EL)
IC24	8-759-049-96	s	IC SN74HC32APW-E05
IC25	8-759-082-58	s	IC TC7W08FU
IC26	8-759-175-04	s	IC PCF8574T-T
IC27	8-759-399-53	s	IC MAX703CSA-TE2
IC28	8-759-079-60	s	IC TC74VHC32FS(EL)
IC30	8-759-082-59	s	IC TC7W32FU
IS13	1-540-197-11	o	SOCKET, IC 32P
L1	1-412-951-11	s	INDUCTOR 10uH
Q1	8-729-402-19	s	TRANSISTOR XN6501
Q2	8-729-029-14	s	TRANSISTOR DTC144EUA-T106
Q3	8-729-403-29	s	TRANSISTOR XN6435
R1	1-218-712-11	s	METAL, CHIP 6.8K 0.50% 1/16W
R2	1-218-716-11	s	METAL, CHIP 10K 0.50% 1/16W
R3	1-218-716-11	s	METAL, CHIP 10K 0.50% 1/16W
R4	1-218-740-11	s	METAL, CHIP 100K 0.50% 1/16W
R5	1-218-740-11	s	METAL, CHIP 100K 0.50% 1/16W
R6	1-218-740-11	s	METAL, CHIP 100K 0.50% 1/16W
R7	1-216-857-11	s	METAL, CHIP 1M 5% 1/16W
R8	1-218-692-11	s	METAL, CHIP 1K 0.50% 1/16W
R9	1-218-716-11	s	METAL, CHIP 10K 0.50% 1/16W
R10	1-218-708-11	s	METAL, CHIP 4.7K 0.50% 1/16W
R11	1-218-716-11	s	METAL, CHIP 10K 0.50% 1/16W
R13	1-218-724-11	s	METAL, CHIP 22K 0.50% 1/16W
R14	1-218-644-11	s	METAL, CHIP 10 0.50% 1/16W
R15-19	1-218-728-11	s	METAL, CHIP 33K 0.50% 1/16W
R21	1-218-692-11	s	METAL, CHIP 1K 0.50% 1/16W
R22	1-218-716-11	s	METAL, CHIP 10K 0.50% 1/16W
R23	1-218-684-11	s	METAL, CHIP 470 0.50% 1/16W
R24	1-218-684-11	s	METAL, CHIP 470 0.50% 1/16W
R25	1-218-740-11	s	METAL, CHIP 100K 0.50% 1/16W
R26	1-218-740-11	s	METAL, CHIP 100K 0.50% 1/16W
R27	1-218-692-11	s	METAL, CHIP 1K 0.50% 1/16W
R28	1-218-732-11	s	METAL, CHIP 47K 0.50% 1/16W
R29	1-218-740-11	s	METAL, CHIP 100K 0.50% 1/16W
R30	1-218-728-11	s	METAL, CHIP 33K 0.50% 1/16W
R31	1-218-728-11	s	METAL, CHIP 33K 0.50% 1/16W
R32	1-218-728-11	s	METAL, CHIP 33K 0.50% 1/16W
R33	1-218-684-11	s	METAL, CHIP 470 0.50% 1/16W
R34	1-218-740-11	s	METAL, CHIP 100K 0.50% 1/16W
R35	1-218-732-11	s	METAL, CHIP 47K 0.50% 1/16W
R36	1-218-692-11	s	METAL, CHIP 1K 0.50% 1/16W
R37	1-218-692-11	s	METAL, CHIP 1K 0.50% 1/16W
R38	1-218-732-11	s	METAL, CHIP 47K 0.50% 1/16W
R39	1-216-864-11	s	METAL, CHIP 0 5% 1/16W
R40	1-218-740-11	s	METAL, CHIP 100K 0.50% 1/16W
R41	1-216-864-11	s	METAL, CHIP 0 5% 1/16W

(CT-187 BOARD)

Ref. No. or Q'ty	Part No.	SP	Description
R42	1-218-740-11	s	METAL, CHIP 100K 0.50% 1/16W
R43	1-218-740-11	s	METAL, CHIP 100K 0.50% 1/16W
R44	1-218-732-11	s	METAL, CHIP 47K 0.50% 1/16W
R45	1-218-668-11	s	METAL, CHIP 100 0.50% 1/16W
R46	1-216-857-11	s	METAL, CHIP 1M 5% 1/16W
R47	1-218-728-11	s	METAL, CHIP 33K 0.50% 1/16W
R48	1-218-692-11	s	METAL, CHIP 1K 0.50% 1/16W
R49	1-218-728-11	s	METAL, CHIP 33K 0.50% 1/16W
R50	1-218-728-11	s	METAL, CHIP 33K 0.50% 1/16W
R51	1-218-692-11	s	METAL, CHIP 1K 0.50% 1/16W
R52	1-218-692-11	s	METAL, CHIP 1K 0.50% 1/16W
R53	1-218-732-11	s	METAL, CHIP 47K 0.50% 1/16W
R54	1-218-732-11	s	METAL, CHIP 47K 0.50% 1/16W
R55	1-216-857-11	s	METAL, CHIP 1M 5% 1/16W
RB1	1-239-412-11	s	NETWORK RESISTOR (CHIP) 100
RB2	1-236-904-11	s	NETWORK RESISTOR (CHIP) 1.0K
RB3	1-236-904-11	s	NETWORK RESISTOR (CHIP) 1.0K
RB4	1-239-436-11	s	NETWORK RESISTOR (CHIP) 33K
RB5	1-239-436-11	s	NETWORK RESISTOR (CHIP) 33K
RB6	1-239-292-11	s	RESISTOR ARRAY, CHIP 33K
RB7	1-239-292-11	s	RESISTOR ARRAY, CHIP 33K
RB8	1-239-292-11	s	RESISTOR ARRAY, CHIP 33K
RB9	1-236-904-11	s	NETWORK RESISTOR (CHIP) 1.0K
RB10	1-239-436-11	s	NETWORK RESISTOR (CHIP) 33K
RB12	1-239-409-11	s	NETWORK RESISTOR (CHIP) 47
RB13	1-239-436-11	s	NETWORK RESISTOR (CHIP) 33K
S1	1-692-881-21	s	SWITCH, SLIDE
S2	1-692-271-21	s	SWITCH, SLIDE
S3	1-692-881-21	s	SWITCH, SLIDE
X1	1-760-273-11	s	CRYSTAL 20.000000MHz
X2	1-760-778-21	s	CRYSTAL 32.000000MHz

DC-87 BOARD

Ref. No. or Q'ty	Part No.	SP	Description
1pc	1-662-332-12	o	PRINTED CIRCUIT BOARD, DC-87
C1-7	1-115-339-11	s	CERAMIC 0.1uF 10% 50V
FL1	1-414-581-21	s	INDUCTOR 0
FL2	1-414-581-21	s	INDUCTOR 0
FL3	1-239-896-12	s	FILTER, EMI (SMD)
FL4	1-239-896-12	s	FILTER, EMI (SMD)
FL5	1-239-896-12	s	FILTER, EMI (SMD)

DC-88 BOARD

Ref. No. or Q'ty	Part No.	SP	Description
1pc	A-8277-766-A	o	MOUNTED CIRCUIT BOARD, DC-88
1pc	1-562-260-11	o	CONTACT, SOCKET
1pc	1-580-696-11	o	HOUSING 9P
1pc	7-623-505-01	s	LUG, 2
CN1	1-564-603-31	s	CONNECTOR, WITH DC SW 4P, MALE
CN2	1-565-899-11	o	PIN, SINGLE IN LINE 4P
FL1	1-117-193-11	s	CERAMIC 3, TERMINAL 1.5uF 50V
FL3	1-117-193-11	s	CERAMIC 3, TERMINAL 1.5uF 50V

DCP-1 BOARD *For DNW-7/7P/90/90P/90WS/90WSP only

Ref. No. or Q'ty	Part No.	SP	Description
1pc	A-8277-776-A	o	MOUNTED CIRCUIT BOARD, DCP-1
2pcs	3-603-737-01	o	LEVER,BOARD
5pcs	3-729-061-01	s	SCREW M2X4.5 (TYPE 1)
C1	1-162-913-11	s	CERAMIC, CHIP 8PF 50V
C2	1-164-156-11	s	CERAMIC, CHIP 0.1uF 25V
C3	1-104-851-11	s	TANTALUM, CHIP 10uF 20% 10V
C4	1-164-156-11	s	CERAMIC, CHIP 0.1uF 25V
C5	1-104-851-11	s	TANTALUM, CHIP 10uF 20% 10V
C6	1-164-156-11	s	CERAMIC, CHIP 0.1uF 25V
C7	1-164-156-11	s	CERAMIC, CHIP 0.1uF 25V
C8	1-164-156-11	s	CERAMIC, CHIP 0.1uF 25V
C9	1-107-687-11	s	TANTALUM, CHIP 3.3uF 20% 20V
C10	1-162-907-11	s	CERAMIC, CHIP 2PF 50V
C11	1-162-913-11	s	CERAMIC, CHIP 8PF 50V
C12	1-164-156-11	s	CERAMIC, CHIP 0.1uF 25V
C13	1-104-851-11	s	TANTALUM, CHIP 10uF 20% 10V
C14	1-164-156-11	s	CERAMIC, CHIP 0.1uF 25V
C15	1-104-851-11	s	TANTALUM, CHIP 10uF 20% 10V
C16	1-164-156-11	s	CERAMIC, CHIP 0.1uF 25V
C17	1-164-156-11	s	CERAMIC, CHIP 0.1uF 25V
C18	1-104-823-11	s	TANTALUM, CHIP 47uF 20% 16V
C19	1-162-907-11	s	CERAMIC, CHIP 2PF 50V
C20	1-162-907-11	s	CERAMIC, CHIP 2PF 50V
C21	1-162-913-11	s	CERAMIC, CHIP 8PF 50V
C22	1-164-156-11	s	CERAMIC, CHIP 0.1uF 25V
C23	1-104-851-11	s	TANTALUM, CHIP 10uF 20% 10V
C24	1-164-156-11	s	CERAMIC, CHIP 0.1uF 25V
C25	1-104-851-11	s	TANTALUM, CHIP 10uF 20% 10V
C26	1-164-156-11	s	CERAMIC, CHIP 0.1uF 25V
C27	1-164-156-11	s	CERAMIC, CHIP 0.1uF 25V
C28	1-164-156-11	s	CERAMIC, CHIP 0.1uF 25V
C31	1-164-156-11	s	CERAMIC, CHIP 0.1uF 25V
C32	1-164-156-11	s	CERAMIC, CHIP 0.1uF 25V
C33	1-104-823-11	s	TANTALUM, CHIP 47uF 20% 16V
C34	1-162-917-11	s	CERAMIC, CHIP 15PF 5% 50V
C35	1-162-917-11	s	CERAMIC, CHIP 15PF 5% 50V
C36	1-162-917-11	s	CERAMIC, CHIP 15PF 5% 50V
C38	1-164-156-11	s	CERAMIC, CHIP 0.1uF 25V
C39	1-107-686-11	s	TANTALUM, CHIP 4.7uF 20% 16V
C40	1-164-156-11	s	CERAMIC, CHIP 0.1uF 25V
C41	1-164-156-11	s	CERAMIC, CHIP 0.1uF 25V
C42	1-162-927-11	s	CERAMIC, CHIP 100PF 5% 50V
C43	1-162-924-11	s	CERAMIC 56PF 5% 50V
C44	1-162-924-11	s	CERAMIC 56PF 5% 50V
C45	1-164-227-11	s	CERAMIC, CHIP 0.022uF 10% 25V
C47	1-162-927-11	s	CERAMIC, CHIP 100PF 5% 50V
C48	1-162-924-11	s	CERAMIC 56PF 5% 50V
C49	1-162-924-11	s	CERAMIC 56PF 5% 50V
C51	1-162-927-11	s	CERAMIC, CHIP 100PF 5% 50V
C52	1-162-924-11	s	CERAMIC 56PF 5% 50V
C53	1-162-924-11	s	CERAMIC 56PF 5% 50V
C54	1-164-227-11	s	CERAMIC, CHIP 0.022uF 10% 25V
C56	1-162-927-11	s	CERAMIC, CHIP 100PF 5% 50V
C57	1-162-917-11	s	CERAMIC, CHIP 15PF 5% 50V
C58	1-162-923-11	s	CERAMIC, CHIP 47PF 5% 50V
C59	1-162-923-11	s	CERAMIC, CHIP 47PF 5% 50V
C61	1-162-919-11	s	CERAMIC, CHIP 22PF 5% 50V

(DCP-1 BOARD)

Ref. No. or Q'ty	Part No.	SP	Description
C62	1-162-923-11	s	CERAMIC, CHIP 47PF 5% 50V
C63	1-162-923-11	s	CERAMIC, CHIP 47PF 5% 50V
C64	1-162-921-11	s	CERAMIC, CHIP 33PF 5% 50V
C65	1-162-921-11	s	CERAMIC, CHIP 33PF 5% 50V
C66	1-164-156-11	s	CERAMIC, CHIP 0.1uF 25V
C67	1-164-156-11	s	CERAMIC, CHIP 0.1uF 25V
C68	1-164-156-11	s	CERAMIC, CHIP 0.1uF 25V
C69	1-164-156-11	s	CERAMIC, CHIP 0.1uF 25V
C70	1-162-927-11	s	CERAMIC, CHIP 100PF 5% 50V
C71	1-162-923-11	s	CERAMIC, CHIP 47PF 5% 50V
C72	1-162-923-11	s	CERAMIC, CHIP 47PF 5% 50V
C74-79	1-164-156-11	s	CERAMIC, CHIP 0.1uF 25V
C80	1-107-686-11	s	TANTALUM, CHIP 4.7uF 20% 16V
C81	1-164-156-11	s	CERAMIC, CHIP 0.1uF 25V
C82	1-164-156-11	s	CERAMIC, CHIP 0.1uF 25V
C83	1-162-964-11	s	CERAMIC, CHIP 0.001uF 10% 50V
C84	1-164-156-11	s	CERAMIC, CHIP 0.1uF 25V
C85	1-162-964-11	s	CERAMIC, CHIP 0.001uF 10% 50V
C86	1-113-642-11	s	TANTALUM, CHIP 47uF 20% 10V
C87	1-162-917-11	s	CERAMIC, CHIP 15PF 5% 50V
C88	1-162-917-11	s	CERAMIC, CHIP 15PF 5% 50V
C89	1-113-642-11	s	TANTALUM, CHIP 47uF 20% 10V
C90	1-164-156-11	s	CERAMIC, CHIP 0.1uF 25V
C91	1-164-156-11	s	CERAMIC, CHIP 0.1uF 25V
C93	1-162-917-11	s	CERAMIC, CHIP 15PF 5% 50V
C94	1-164-156-11	s	CERAMIC, CHIP 0.1uF 25V
C95	1-162-915-11	s	CERAMIC, CHIP 10PF 50V
C97	1-113-642-11	s	TANTALUM, CHIP 47uF 20% 10V
C98	1-113-642-11	s	TANTALUM, CHIP 47uF 20% 10V
C100	1-162-915-11	s	CERAMIC, CHIP 10PF 50V
C102	1-164-156-11	s	CERAMIC, CHIP 0.1uF 25V
C103	1-164-156-11	s	CERAMIC, CHIP 0.1uF 25V
C104	1-113-642-11	s	TANTALUM, CHIP 47uF 20% 10V
C105	1-113-642-11	s	TANTALUM, CHIP 47uF 20% 10V
C107	1-162-917-11	s	CERAMIC, CHIP 15PF 5% 50V
C108	1-164-156-11	s	CERAMIC, CHIP 0.1uF 25V
C109	1-164-156-11	s	CERAMIC, CHIP 0.1uF 25V
C110	1-164-156-11	s	CERAMIC, CHIP 0.1uF 25V
C111	1-164-156-11	s	CERAMIC, CHIP 0.1uF 25V
C112	1-164-346-11	s	CERAMIC 1uF 16V
C113	1-164-346-11	s	CERAMIC 1uF 16V
C114	1-164-346-11	s	CERAMIC 1uF 16V
C115	1-164-346-11	s	CERAMIC 1uF 16V
C116	1-164-156-11	s	CERAMIC, CHIP 0.1uF 25V
C121	1-162-915-11	s	CERAMIC, CHIP 10PF 50V
C122	1-162-915-11	s	CERAMIC, CHIP 10PF 50V
C123	1-162-915-11	s	CERAMIC, CHIP 10PF 50V
C124	1-164-156-11	s	CERAMIC, CHIP 0.1uF 25V
C134	1-162-920-11	s	CERAMIC, CHIP 27PF 5% 50V
C135	1-162-917-11	s	CERAMIC, CHIP 15PF 5% 50V
C136	1-162-915-11	s	CERAMIC, CHIP 10PF 50V
C139-145	1-164-156-11	s	CERAMIC, CHIP 0.1uF 25V
C146	1-162-912-11	s	CERAMIC, CHIP 7PF 50V
C147	1-165-176-11	s	CERAMIC 0.047uF 10% 16V
C152	1-164-156-11	s	CERAMIC, CHIP 0.1uF 25V
C153	1-164-156-11	s	CERAMIC, CHIP 0.1uF 25V
C155	1-164-156-11	s	CERAMIC, CHIP 0.1uF 25V
C156	1-162-927-11	s	CERAMIC, CHIP 100PF 5% 50V
C157	1-162-927-11	s	CERAMIC, CHIP 100PF 5% 50V

(DCP-1 BOARD)

Ref. No. or Q'ty	Part No.	SP	Description
C158	1-164-156-11	s	CERAMIC, CHIP 0.1uF 25V
C159	1-162-927-11	s	CERAMIC, CHIP 100PF 5% 50V
C160	1-164-156-11	s	CERAMIC, CHIP 0.1uF 25V
C161	1-164-156-11	s	CERAMIC, CHIP 0.1uF 25V
C162	1-164-156-11	s	CERAMIC, CHIP 0.1uF 25V
C163	1-164-005-11	s	CERAMIC, CHIP 0.47uF 25V
C167	1-164-156-11	s	CERAMIC, CHIP 0.1uF 25V
C168	1-164-156-11	s	CERAMIC, CHIP 0.1uF 25V
C173	1-164-156-11	s	CERAMIC, CHIP 0.1uF 25V
C174	1-164-156-11	s	CERAMIC, CHIP 0.1uF 25V
C175	1-135-179-21	s	TANTALUM 2.2uF 10% 16V
C177	1-164-156-11	s	CERAMIC, CHIP 0.1uF 25V
C178	1-104-823-11	s	TANTALUM, CHIP 47uF 20% 16V
C180	1-107-686-11	s	TANTALUM, CHIP 4.7uF 20% 16V
C181	1-164-156-11	s	CERAMIC, CHIP 0.1uF 25V
C182	1-164-346-11	s	CERAMIC 1uF 16V
C183	1-164-156-11	s	CERAMIC, CHIP 0.1uF 25V
C184	1-135-149-21	s	TANTALUM, CHIP 2.2uF 10% 10V
C185	1-113-642-11	s	TANTALUM, CHIP 47uF 20% 10V
C187	1-162-915-11	s	CERAMIC, CHIP 10PF 50V
C188	1-164-156-11	s	CERAMIC, CHIP 0.1uF 25V
C189	1-135-149-21	s	TANTALUM, CHIP 2.2uF 10% 10V
C190	1-104-823-11	s	TANTALUM, CHIP 47uF 20% 16V
C191	1-104-823-11	s	TANTALUM, CHIP 47uF 20% 16V
C193	1-164-156-11	s	CERAMIC, CHIP 0.1uF 25V
C194	1-164-156-11	s	CERAMIC, CHIP 0.1uF 25V
C195	1-135-149-21	s	TANTALUM, CHIP 2.2uF 10% 10V
C196	1-104-823-11	s	TANTALUM, CHIP 47uF 20% 16V
C199	1-104-823-11	s	TANTALUM, CHIP 47uF 20% 16V
C200	1-164-156-11	s	CERAMIC, CHIP 0.1uF 25V
C201	1-165-176-11	s	CERAMIC 0.047uF 10% 16V
C202	1-164-156-11	s	CERAMIC, CHIP 0.1uF 25V
C203	1-113-994-11	s	TANTALUM, CHIP 6.8uF 20% 16V
C204	1-162-970-11	s	CERAMIC, CHIP 0.01uF 10% 25V
C217	1-135-210-11	s	TANTALUM, CHIP 4.7uF 20% 10V
C219	1-164-156-11	s	CERAMIC, CHIP 0.1uF 25V
C221	1-104-823-11	s	TANTALUM, CHIP 47uF 20% 16V
C222	1-164-156-11	s	CERAMIC, CHIP 0.1uF 25V
C228	1-164-156-11	s	CERAMIC, CHIP 0.1uF 25V
C229	1-162-970-11	s	CERAMIC, CHIP 0.01uF 10% 25V
C230	1-162-970-11	s	CERAMIC, CHIP 0.01uF 10% 25V
C231	1-164-156-11	s	CERAMIC, CHIP 0.1uF 25V
C234	1-164-156-11	s	CERAMIC, CHIP 0.1uF 25V
C235	1-104-823-11	s	TANTALUM, CHIP 47uF 20% 16V
C236	1-164-156-11	s	CERAMIC, CHIP 0.1uF 25V
C237	1-164-156-11	s	CERAMIC, CHIP 0.1uF 25V
C238	1-104-823-11	s	TANTALUM, CHIP 47uF 20% 16V
C239	1-164-156-11	s	CERAMIC, CHIP 0.1uF 25V
C244-249	1-164-156-11	s	CERAMIC, CHIP 0.1uF 25V
C259	1-164-156-11	s	CERAMIC, CHIP 0.1uF 25V
C292	1-107-686-11	s	TANTALUM, CHIP 4.7uF 20% 16V
C295	1-164-156-11	s	CERAMIC, CHIP 0.1uF 25V
C316-321	1-164-156-11	s	CERAMIC, CHIP 0.1uF 25V
C323-327	1-164-156-11	s	CERAMIC, CHIP 0.1uF 25V
C328	1-162-927-11	s	CERAMIC, CHIP 100PF 5% 50V
C329	1-113-994-11	s	TANTALUM, CHIP 6.8uF 20% 16V
C330	1-107-686-11	s	TANTALUM, CHIP 4.7uF 20% 16V
C331	1-104-851-11	s	TANTALUM, CHIP 10uF 20% 10V
C332	1-162-927-11	s	CERAMIC, CHIP 100PF 5% 50V

(DCP-1 BOARD)

Ref. No. or Q'ty	Part No.	SP	Description
C333	1-164-156-11	s	CERAMIC, CHIP 0.1uF 25V
C334	1-164-156-11	s	CERAMIC, CHIP 0.1uF 25V
C335	1-162-927-11	s	CERAMIC, CHIP 100PF 5% 50V
C336	1-113-981-11	s	TANTALUM, CHIP 22uF 20% 20V
C337	1-164-156-11	s	CERAMIC, CHIP 0.1uF 25V
C338	1-164-156-11	s	CERAMIC, CHIP 0.1uF 25V
C340	1-164-156-11	s	CERAMIC, CHIP 0.1uF 25V
C341	1-104-823-11	s	TANTALUM, CHIP 47uF 20% 16V
C342	1-104-823-11	s	TANTALUM, CHIP 47uF 20% 16V
C343	1-162-908-11	s	CERAMIC, CHIP 3PF 50V
C344	1-162-924-11	s	CERAMIC 56PF 5% 50V
C345	1-162-917-11	s	CERAMIC, CHIP 15PF 5% 50V
C346	1-164-156-11	s	CERAMIC, CHIP 0.1uF 25V
C347	1-162-908-11	s	CERAMIC, CHIP 3PF 50V
C348	1-164-156-11	s	CERAMIC, CHIP 0.1uF 25V
C349	1-164-156-11	s	CERAMIC, CHIP 0.1uF 25V
C350	1-164-156-11	s	CERAMIC, CHIP 0.1uF 25V
C354	1-104-823-11	s	TANTALUM, CHIP 47uF 20% 16V
C355	1-104-823-11	s	TANTALUM, CHIP 47uF 20% 16V
C356-360	1-164-156-11	s	CERAMIC, CHIP 0.1uF 25V
C362	1-164-156-11	s	CERAMIC, CHIP 0.1uF 25V
C363	1-164-156-11	s	CERAMIC, CHIP 0.1uF 25V
C365	1-164-156-11	s	CERAMIC, CHIP 0.1uF 25V
C403	1-164-156-11	s	CERAMIC, CHIP 0.1uF 25V
C404	1-164-156-11	s	CERAMIC, CHIP 0.1uF 25V
C406	1-113-994-11	s	TANTALUM, CHIP 6.8uF 20% 16V
C407	1-164-156-11	s	CERAMIC, CHIP 0.1uF 25V
C408	1-162-964-11	s	CERAMIC, CHIP 0.001uF 10% 50V
C409	1-164-227-11	s	CERAMIC, CHIP 0.022uF 10% 25V
C410	1-104-823-11	s	TANTALUM, CHIP 47uF 20% 16V
C411	1-113-981-11	s	TANTALUM, CHIP 22uF 20% 20V
C416	1-164-227-11	s	CERAMIC, CHIP 0.022uF 10% 25V
C417	1-164-227-11	s	CERAMIC, CHIP 0.022uF 10% 25V
C420	1-164-156-11	s	CERAMIC, CHIP 0.1uF 25V
C421	1-164-227-11	s	CERAMIC, CHIP 0.022uF 10% 25V
C423	1-162-970-11	s	CERAMIC, CHIP 0.01uF 10% 25V
C424	1-162-970-11	s	CERAMIC, CHIP 0.01uF 10% 25V
C425	1-162-964-11	s	CERAMIC, CHIP 0.001uF 10% 50V
C426	1-164-227-11	s	CERAMIC, CHIP 0.022uF 10% 25V
C429	1-162-970-11	s	CERAMIC, CHIP 0.01uF 10% 25V
C430	1-162-964-11	s	CERAMIC, CHIP 0.001uF 10% 50V
C431	1-164-156-11	s	CERAMIC, CHIP 0.1uF 25V
C432	1-107-690-11	s	TANTALUM, CHIP 6.8uF 20% 35V
C433	1-164-227-11	s	CERAMIC, CHIP 0.022uF 10% 25V
C434	1-162-970-11	s	CERAMIC, CHIP 0.01uF 10% 25V
C435	1-164-227-11	s	CERAMIC, CHIP 0.022uF 10% 25V
C437	1-162-913-11	s	CERAMIC, CHIP 8PF 50V
C438	1-162-913-11	s	CERAMIC, CHIP 8PF 50V
C439	1-104-823-11	s	TANTALUM, CHIP 47uF 20% 16V
C440	1-164-227-11	s	CERAMIC, CHIP 0.022uF 10% 25V
C441	1-164-227-11	s	CERAMIC, CHIP 0.022uF 10% 25V
C443-451	1-164-227-11	s	CERAMIC, CHIP 0.022uF 10% 25V
C453	1-164-227-11	s	CERAMIC, CHIP 0.022uF 10% 25V
C462	1-164-227-11	s	CERAMIC, CHIP 0.022uF 10% 25V
C463	1-164-227-11	s	CERAMIC, CHIP 0.022uF 10% 25V
C464	1-164-227-11	s	CERAMIC, CHIP 0.022uF 10% 25V
C465	1-164-227-11	s	CERAMIC, CHIP 0.022uF 10% 25V
C471	1-164-227-11	s	CERAMIC, CHIP 0.022uF 10% 25V
C472	1-164-156-11	s	CERAMIC, CHIP 0.1uF 25V

(DCP-1 BOARD)

Ref. No. or Q'ty	Part No.	SP	Description
C473	1-164-156-11	s	CERAMIC, CHIP 0.1uF 25V
C474	1-164-156-11	s	CERAMIC, CHIP 0.1uF 25V
C475	1-164-156-11	s	CERAMIC, CHIP 0.1uF 25V
C478	1-164-227-11	s	CERAMIC, CHIP 0.022uF 10% 25V
C479	1-104-823-11	s	TANTALUM, CHIP 47uF 20% 16V
C480	1-104-823-11	s	TANTALUM, CHIP 47uF 20% 16V
C481	1-104-823-11	s	TANTALUM, CHIP 47uF 20% 16V
C482	1-164-227-11	s	CERAMIC, CHIP 0.022uF 10% 25V
C483	1-162-915-11	s	CERAMIC, CHIP 10PF 50V
C484	1-164-156-11	s	CERAMIC, CHIP 0.1uF 25V
C485	1-115-581-11	s	TANTALUM, CHIP 100uF 20% 16V
C486	1-115-581-11	s	TANTALUM, CHIP 100uF 20% 16V
C487	1-162-915-11	s	CERAMIC, CHIP 10PF 50V
C488	1-164-227-11	s	CERAMIC, CHIP 0.022uF 10% 25V
C499	1-164-227-11	s	CERAMIC, CHIP 0.022uF 10% 25V
CN2	1-695-453-11	s	CONNECTOR, BOARD TO BOARD 50P
CN4	1-778-539-11	o	CONNECTOR, BOARD TO BOARD 66P
CN5	1-778-539-11	o	CONNECTOR, BOARD TO BOARD 66P
CN6	1-778-539-11	o	CONNECTOR, BOARD TO BOARD 66P
CN7	1-568-335-11	s	CONNECTOR, BOARD TO BOARD 18P
CN8	1-568-335-11	s	CONNECTOR, BOARD TO BOARD 18P
CN9	1-568-335-11	s	CONNECTOR, BOARD TO BOARD 18P
CN10	1-778-551-11	o	CONNECTOR, 20P, MALE
CP1	1-760-347-21	s	VCO, CRYSTAL 27.000000MHz
D1	8-719-948-47	s	DIODE HSM88AS
D2	8-719-029-59	s	DIODE RD3.0UH-T1
D3	8-719-029-59	s	DIODE RD3.0UH-T1
D4	8-719-029-59	s	DIODE RD3.0UH-T1
D5	8-719-029-63	s	DIODE RD4.3UH-T1
D6	8-719-017-42	s	DIODE HSM88WA
D7	8-719-404-35	s	DIODE MA141WK
D8	8-719-029-63	s	DIODE RD4.3UH-T1
D9	8-719-029-63	s	DIODE RD4.3UH-T1
D10	8-719-404-35	s	DIODE MA141WK
D11	8-719-029-59	s	DIODE RD3.0UH-T1
D12	8-719-948-47	s	DIODE HSM88AS
D14	8-719-948-47	s	DIODE HSM88AS
D39	8-719-820-41	s	DIODE 1SS302
D40	8-719-820-41	s	DIODE 1SS302
D41	8-719-948-47	s	DIODE HSM88AS
D51	8-719-948-47	s	DIODE HSM88AS
D55	8-719-820-41	s	DIODE 1SS302
D56	8-719-820-41	s	DIODE 1SS302
D57	8-719-948-47	s	DIODE HSM88AS
FL1	1-233-739-11	s	FILTER, LOW-PASS
FL2	1-233-741-11	s	FILTER, LOW-PASS
FL3	1-233-739-11	s	FILTER, LOW-PASS
FL4	1-233-741-11	s	FILTER, LOW-PASS
FL5	1-233-739-11	s	FILTER, LOW-PASS
FL6	1-233-741-11	s	FILTER, LOW-PASS
IC1	8-759-066-59	s	IC TC74HC4053AFS
IC2	8-752-376-32	s	IC CXD2310AR
IC3	8-759-079-61	s	IC TC74VHC74FS(EL)
IC4	8-759-079-49	s	IC TC74VHC04FS(EL)
IC5	8-752-376-32	s	IC CXD2310AR
IC6	8-759-079-63	s	IC TC74VHC86FS(EL)
IC7	8-752-376-32	s	IC CXD2310AR

(DCP-1 BOARD)

Ref. No. or Q'ty	Part No.	SP	Description
IC8	8-759-066-59	s	IC TC74HC4053AFS
IC9	8-759-175-02	s	IC TL074CPW
IC10	8-759-184-64	s	IC TC4W66FU
IC11	8-759-184-64	s	IC TC4W66FU
IC12	8-759-184-64	s	IC TC4W66FU
IC13	8-759-635-27	s	IC M62352GP
IC14	8-759-399-55	s	IC TL054CDB-E05
IC15	8-759-066-59	s	IC TC74HC4053AFS
IC16	8-759-051-48	s	IC SN74HCT541APW-E05
IC18	8-759-082-55	s	IC TC7W00FU
IC19	8-759-079-52	s	IC TC74VHC08FS(EL)
IC20	8-759-079-73	s	IC TC74VHC153FS(EL)
IC21	8-759-079-73	s	IC TC74VHC153FS(EL)
IC22	8-759-079-61	s	IC TC74VHC74FS(EL)
IC23	8-759-348-79	s	IC TE7751
IC24	8-759-035-93	s	IC TC7S32F-TE85L
IC25	8-759-196-93	s	IC TC7SH00FU-TE85R
IC28	8-759-031-84	s	IC TC7S04F
IC30	8-759-182-95	s	IC HD151015T
IC33	8-759-277-63	s	IC TC7W14FU(TE12R)
IC34	8-759-066-68	s	IC REF-03GS
IC35	8-759-076-06	s	IC TL064CPW
IC36	8-759-079-63	s	IC TC74VHC86FS(EL)
IC37	8-752-360-44	s	IC CXK1203AR
IC38	8-752-360-44	s	IC CXK1203AR
IC39	8-752-360-44	s	IC CXK1203AR
IC40	8-752-360-44	s	IC CXK1203AR
IC41	8-759-196-97	s	IC TC7SH32FU-TE85R
IC43	8-759-079-49	s	IC TC74VHC04FS(EL)
IC44	8-759-079-49	s	IC TC74VHC04FS(EL)
IC45	8-759-256-90	s	IC NJU7021V-TE2
IC46	8-759-049-86	s	IC SN74HCT244APW-E05
IC47	8-759-271-86	s	IC TC7SH04FU
IC49	8-759-277-63	s	IC TC7W14FU(TE12R)
IC50	8-759-234-20	s	IC TC7S08F
IC51	8-759-080-02	s	IC TC74VHC541FS(EL)
IC52	8-759-389-33	s	IC 74LCX244MTCX
IC53	8-759-635-27	s	IC M62352GP
IC54	8-759-054-61	s	IC CLC505AJE
IC55	8-759-051-48	s	IC SN74HCT541APW-E05
IC56	8-759-180-08	s	IC TC74HC4538AFS
IC57	8-759-271-86	s	IC TC7SH04FU
IC58	8-759-079-46	s	IC TC74VHC00FS(EL)
IC59	8-759-079-54	s	IC TC74VHC10FS(EL)
IC60	8-752-363-60	s	IC CXD2307R-T6
IC61	8-752-356-44	s	IC CXD2306Q
IC62	8-759-080-06	s	IC TC74VHC574FS(EL)
IC63	8-759-347-09	s	IC NJU7034V-TE2
IC64	8-759-347-09	s	IC NJU7034V-TE2
IC65	8-759-196-97	s	IC TC7SH32FU-TE85R
IC66	8-759-196-97	s	IC TC7SH32FU-TE85R
IC68	8-759-050-55	s	IC SN74HCT32APW-E20
IC69	8-759-079-61	s	IC TC74VHC74FS(EL)
IC70	8-759-080-02	s	IC TC74VHC541FS(EL)
IC71	8-752-381-65	o	IC CXD606-101R
IC72	8-759-439-40	o	IC HD6473308RF-DVW700COMV1.00
IC73	8-759-440-51	s	IC SN74LVC574APW-E05
IC75	8-759-196-96	s	IC TC7SH08FU-TE85R
IC76	8-759-277-63	s	IC TC7W14FU(TE12R)

(DCP-1 BOARD)

Ref. No. or Q'ty	Part No.	SP	Description
IC77	8-759-083-94	s	IC TC7W74FU
IC78	8-759-196-93	s	IC TC7SH00FU-TE85R
IC80	8-759-082-58	s	IC TC7W08FU
IC84	8-759-082-61	s	IC TC4W53FU
IC90	8-759-082-58	s	IC TC7W08FU
IC93	8-759-076-06	s	IC TL064CPW
IC100	8-759-089-61	s	IC TC74HC4052AFS(EL)
IC101	8-759-054-61	s	IC CLC505AJE
IC102	8-759-066-59	s	IC TC74HC4053AFS
IC103	8-759-049-60	s	IC SN74HC08APW-E05
IC104	8-759-054-61	s	IC CLC505AJE
IC105	8-759-082-61	s	IC TC4W53FU
IC106	8-759-049-60	s	IC SN74HC08APW-E05
IC107	8-759-049-96	s	IC SN74HC32APW-E05
IC108	8-759-082-58	s	IC TC7W08FU
IC109	8-759-082-57	s	IC TC7W04FU
IC122	8-759-252-59	s	IC MAX202CSE
IC123	8-759-242-78	s	IC TC7W02F
IC124	8-759-079-52	s	IC TC74VHC08FS(EL)
IC125	8-759-079-72	s	IC TC74VHC139FS(EL)
IC126	8-759-399-53	s	IC MAX703CSA-TE2
IC128	8-759-082-59	s	IC TC7W32FU
IC129	8-759-159-52	s	IC NJU7024M
IC130	8-759-082-61	s	IC TC4W53FU
IC131	8-759-159-52	s	IC NJU7024M
IC132	8-759-256-90	s	IC NJU7021V-TE2
IC133	8-759-059-50	s	IC MB88351PFV
IC134	8-759-399-47	s	IC HD6435348SY00F
IC135	8-759-149-10	s	IC UPD4702G
IC136	8-752-337-79	s	IC CXK58257AM-10LL
IC137	8-759-079-70	s	IC TC74VHC138FS(EL)
IC138	8-759-079-70	s	IC TC74VHC138FS(EL)
IC139	8-759-186-32	s	TC74VHC21F
IC140	8-759-165-37	s	IC X24164SIC7000
IC141	8-759-186-53	s	IC TC74VHC163F
IC142	8-759-186-53	s	IC TC74VHC163F
IC143	8-759-049-55	s	IC SN74HC00APW-E20
IC144	8-759-079-63	s	IC TC74VHC86FS(EL)
IC145	8-759-186-26	s	IC TC74VHC02F
IC146	8-759-082-61	s	IC TC4W53FU
IC147	8-759-078-75	s	IC UPD6453GT-610
IC148	8-759-078-75	s	IC UPD6453GT-610
IC149	8-759-082-61	s	IC TC4W53FU
IC150	8-759-082-61	s	IC TC4W53FU
IC152	8-759-399-56	s	IC STK12C68-S45
IS1	1-540-197-11	o	SOCKET, IC 32P
L4	1-410-377-31	s	INDUCTOR, CHIP 4.7uH
L7	1-410-373-31	s	INDUCTOR, CHIP 2.2uH
L9	1-412-951-11	s	INDUCTOR 10uH
L11	1-424-643-11	s	COIL, CHOKE 10uH
L12	1-424-643-11	s	COIL, CHOKE 10uH
L13	1-424-643-11	s	COIL, CHOKE 10uH
L14	1-424-643-11	s	COIL, CHOKE 10uH
L16	1-424-643-11	s	COIL, CHOKE 10uH
L17	1-412-951-11	s	INDUCTOR 10uH
L18	1-424-643-11	s	COIL, CHOKE 10uH
L19	1-424-643-11	s	COIL, CHOKE 10uH
L22	1-412-955-11	s	INDUCTOR 22uH

(DCP-1 BOARD)

Ref. No. or Q'ty	Part No.	SP	Description
L23	1-412-955-11	s	INDUCTOR 22uH
L31	1-412-951-11	s	INDUCTOR 10uH
L34	1-412-951-11	s	INDUCTOR 10uH
Q1	8-729-403-32	s	TRANSISTOR XN6534
Q2	8-729-117-73	s	TRANSISTOR 2SC4178-F14
Q3	8-729-403-29	s	TRANSISTOR XN6435
Q4	8-729-117-73	s	TRANSISTOR 2SC4178-F14
Q5	8-729-403-29	s	TRANSISTOR XN6435
Q6	8-729-117-32	s	TRANSISTOR 2SC4177
Q7	8-729-140-63	s	TRANSISTOR 2SA1611-M5M6
Q8	8-729-403-29	s	TRANSISTOR XN6435
Q9	8-729-140-63	s	TRANSISTOR 2SA1611-M5M6
Q10	8-729-117-73	s	TRANSISTOR 2SC4178-F14
Q11	8-729-403-29	s	TRANSISTOR XN6435
Q12	8-729-403-29	s	TRANSISTOR XN6435
Q13	8-729-140-63	s	TRANSISTOR 2SA1611-M5M6
Q14	8-729-140-63	s	TRANSISTOR 2SA1611-M5M6
Q15	8-729-117-73	s	TRANSISTOR 2SC4178-F14
Q16	8-729-403-29	s	TRANSISTOR XN6435
Q17	8-729-117-32	s	TRANSISTOR 2SC4177
Q18	8-729-117-73	s	TRANSISTOR 2SC4178-F14
Q19	8-729-403-32	s	TRANSISTOR XN6534
Q20	8-729-029-14	s	TRANSISTOR DTC144EUA-T106
Q21	8-729-117-73	s	TRANSISTOR 2SC4178-F14
Q22	8-729-403-32	s	TRANSISTOR XN6534
Q23	8-729-820-86	s	TRANSISTOR 2SB1121-ST
Q24	8-729-014-93	s	TRANSISTOR 2SB1440S-TX
Q25	8-729-141-75	s	TRANSISTOR 2SD596DV345
Q31	8-729-028-91	s	TRANSISTOR DTA144EUA-T106
Q32	8-729-029-14	s	TRANSISTOR DTC144EUA-T106
Q33	8-729-028-91	s	TRANSISTOR DTA144EUA-T106
Q34	8-729-029-14	s	TRANSISTOR DTC144EUA-T106
Q37	8-729-029-14	s	TRANSISTOR DTC144EUA-T106
Q38	8-729-029-14	s	TRANSISTOR DTC144EUA-T106
Q39	8-729-029-14	s	TRANSISTOR DTC144EUA-T106
Q40	8-729-029-14	s	TRANSISTOR DTC144EUA-T106
Q43	8-729-028-91	s	TRANSISTOR DTA144EUA-T106
Q45	8-729-140-63	s	TRANSISTOR 2SA1611-M5M6
Q46	8-729-117-32	s	TRANSISTOR 2SC4177
Q47	8-729-117-32	s	TRANSISTOR 2SC4177
Q48	8-729-403-29	s	TRANSISTOR XN6435
Q50	8-729-403-32	s	TRANSISTOR XN6534
Q53	8-729-122-63	s	TRANSISTOR 2SA1226
Q54	8-729-403-32	s	TRANSISTOR XN6534
Q55	8-729-403-29	s	TRANSISTOR XN6435
Q56	8-729-142-90	s	TRANSISTOR 2SK853-K5
Q59	8-729-403-29	s	TRANSISTOR XN6435
Q60	8-729-142-90	s	TRANSISTOR 2SK853-K5
Q61	8-729-117-32	s	TRANSISTOR 2SC4177
Q63	8-729-140-63	s	TRANSISTOR 2SA1611-M5M6
Q64	8-729-117-32	s	TRANSISTOR 2SC4177
Q65	8-729-403-32	s	TRANSISTOR XN6534
Q66	8-729-403-32	s	TRANSISTOR XN6534
Q67	8-729-402-19	s	TRANSISTOR XN6501
Q68	8-729-402-19	s	TRANSISTOR XN6501
Q69	8-729-140-63	s	TRANSISTOR 2SA1611-M5M6
Q71	8-729-403-29	s	TRANSISTOR XN6435
Q73	8-729-403-29	s	TRANSISTOR XN6435

http://getMANUAL.com

(DCP-1 BOARD)

Ref. No. or Q'ty	Part No.	SP	Description
Q75	8-729-117-32	s	TRANSISTOR 2SC4177
Q91	8-729-402-19	s	TRANSISTOR XN6501
Q332	8-729-117-32	s	TRANSISTOR 2SC4177
R1	1-218-692-11	s	METAL, CHIP 1K 0.50% 1/16W
R2	1-218-694-11	s	METAL, CHIP 1.2K 0.50% 1/16W
R3	1-218-708-11	s	METAL, CHIP 4.7K 0.50% 1/16W
R4	1-218-700-11	s	METAL, CHIP 2.2K 0.50% 1/16W
R5	1-218-686-11	s	METAL, CHIP 560 0.50% 1/16W
R6	1-218-699-11	s	METAL, CHIP 2K 0.50% 1/16W
R7	1-218-648-11	s	METAL, CHIP 15 0.50% 1/16W
R8	1-218-683-11	s	METAL, CHIP 430 0.50% 1/16W
R9	1-218-684-11	s	METAL, CHIP 470 0.50% 1/16W
R10	1-218-714-11	s	METAL, CHIP 8.2K 0.50% 1/16W
R11	1-218-704-11	s	METAL, CHIP 3.3K 0.50% 1/16W
R12	1-218-722-11	s	METAL, CHIP 18K 0.50% 1/16W
R13	1-218-700-11	s	METAL, CHIP 2.2K 0.50% 1/16W
R14	1-218-740-11	s	METAL, CHIP 100K 0.50% 1/16W
R15	1-218-716-11	s	METAL, CHIP 10K 0.50% 1/16W
R16	1-218-716-11	s	METAL, CHIP 10K 0.50% 1/16W
R17	1-218-706-11	s	METAL, CHIP 3.9K 0.50% 1/16W
R18	1-218-646-11	s	METAL, CHIP 12 0.50% 1/16W
R19	1-218-732-11	s	METAL, CHIP 47K 0.50% 1/16W
R20	1-218-716-11	s	METAL, CHIP 10K 0.50% 1/16W
R21	1-218-720-11	s	METAL, CHIP 15K 0.50% 1/16W
R22	1-218-692-11	s	METAL, CHIP 1K 0.50% 1/16W
R23	1-218-722-11	s	METAL, CHIP 18K 0.50% 1/16W
R24	1-218-722-11	s	METAL, CHIP 18K 0.50% 1/16W
R25	1-218-704-11	s	METAL, CHIP 3.3K 0.50% 1/16W
R26	1-218-704-11	s	METAL, CHIP 3.3K 0.50% 1/16W
R27	1-218-716-11	s	METAL, CHIP 10K 0.50% 1/16W
R29	1-218-740-11	s	METAL, CHIP 100K 0.50% 1/16W
R30	1-218-696-11	s	METAL, CHIP 1.5K 0.50% 1/16W
R31	1-218-692-11	s	METAL, CHIP 1K 0.50% 1/16W
R32	1-218-694-11	s	METAL, CHIP 1.2K 0.50% 1/16W
R33	1-218-708-11	s	METAL, CHIP 4.7K 0.50% 1/16W
R34	1-218-700-11	s	METAL, CHIP 2.2K 0.50% 1/16W
R35	1-218-686-11	s	METAL, CHIP 560 0.50% 1/16W
R36	1-218-699-11	s	METAL, CHIP 2K 0.50% 1/16W
R37	1-218-648-11	s	METAL, CHIP 15 0.50% 1/16W
R38	1-218-683-11	s	METAL, CHIP 430 0.50% 1/16W
R39	1-218-684-11	s	METAL, CHIP 470 0.50% 1/16W
R40	1-218-714-11	s	METAL, CHIP 8.2K 0.50% 1/16W
R41	1-218-704-11	s	METAL, CHIP 3.3K 0.50% 1/16W
R42	1-218-740-11	s	METAL, CHIP 100K 0.50% 1/16W
R43	1-218-700-11	s	METAL, CHIP 2.2K 0.50% 1/16W
R44	1-218-740-11	s	METAL, CHIP 100K 0.50% 1/16W
R45	1-218-716-11	s	METAL, CHIP 10K 0.50% 1/16W
R46	1-218-716-11	s	METAL, CHIP 10K 0.50% 1/16W
R47	1-218-706-11	s	METAL, CHIP 3.9K 0.50% 1/16W
R48	1-218-646-11	s	METAL, CHIP 12 0.50% 1/16W
R49	1-218-716-11	s	METAL, CHIP 10K 0.50% 1/16W
R50	1-218-704-11	s	METAL, CHIP 3.3K 0.50% 1/16W
R51	1-218-692-11	s	METAL, CHIP 1K 0.50% 1/16W
R52	1-218-694-11	s	METAL, CHIP 1.2K 0.50% 1/16W
R53	1-218-708-11	s	METAL, CHIP 4.7K 0.50% 1/16W
R54	1-218-700-11	s	METAL, CHIP 2.2K 0.50% 1/16W
R55	1-218-686-11	s	METAL, CHIP 560 0.50% 1/16W
R56	1-218-699-11	s	METAL, CHIP 2K 0.50% 1/16W

(DCP-1 BOARD)

Ref. No. or Q'ty	Part No.	SP	Description
R57	1-218-648-11	s	METAL, CHIP 15 0.50% 1/16W
R58	1-218-683-11	s	METAL, CHIP 430 0.50% 1/16W
R59	1-218-684-11	s	METAL, CHIP 470 0.50% 1/16W
R60	1-218-714-11	s	METAL, CHIP 8.2K 0.50% 1/16W
R61	1-218-704-11	s	METAL, CHIP 3.3K 0.50% 1/16W
R62	1-218-674-11	s	METAL, CHIP 180 0.50% 1/16W
R63	1-218-700-11	s	METAL, CHIP 2.2K 0.50% 1/16W
R64	1-218-740-11	s	METAL, CHIP 100K 0.50% 1/16W
R65	1-218-716-11	s	METAL, CHIP 10K 0.50% 1/16W
R66	1-218-716-11	s	METAL, CHIP 10K 0.50% 1/16W
R67	1-218-706-11	s	METAL, CHIP 3.9K 0.50% 1/16W
R68	1-218-646-11	s	METAL, CHIP 12 0.50% 1/16W
R70	1-218-704-11	s	METAL, CHIP 3.3K 0.50% 1/16W
R71	1-218-692-11	s	METAL, CHIP 1K 0.50% 1/16W
R72	1-218-692-11	s	METAL, CHIP 1K 0.50% 1/16W
R73	1-218-692-11	s	METAL, CHIP 1K 0.50% 1/16W
R74	1-218-692-11	s	METAL, CHIP 1K 0.50% 1/16W
R75	1-216-864-11	s	METAL, CHIP 0 5% 1/16W
R76	1-218-674-11	s	METAL, CHIP 180 0.50% 1/16W
R77	1-218-674-11	s	METAL, CHIP 180 0.50% 1/16W
R78	1-218-674-11	s	METAL, CHIP 180 0.50% 1/16W
R79	1-216-864-11	s	METAL, CHIP 0 5% 1/16W
R80	1-216-864-11	s	METAL, CHIP 0 5% 1/16W
R81	1-218-660-11	s	METAL, CHIP 47 0.50% 1/16W
R83	1-218-644-11	s	METAL, CHIP 10 0.50% 1/16W
R84	1-216-864-11	s	METAL, CHIP 0 5% 1/16W
R85	1-218-644-11	s	METAL, CHIP 10 0.50% 1/16W
R86	1-218-740-11	s	METAL, CHIP 100K 0.50% 1/16W
R89	1-218-644-11	s	METAL, CHIP 10 0.50% 1/16W
R90	1-218-704-11	s	METAL, CHIP 3.3K 0.50% 1/16W
R91	1-218-700-11	s	METAL, CHIP 2.2K 0.50% 1/16W
R92	1-218-704-11	s	METAL, CHIP 3.3K 0.50% 1/16W
R93	1-218-700-11	s	METAL, CHIP 2.2K 0.50% 1/16W
R94	1-218-696-11	s	METAL, CHIP 1.5K 0.50% 1/16W
R95	1-218-701-11	s	METAL, CHIP 2.4K 0.50% 1/16W
R96	1-218-701-11	s	METAL, CHIP 2.4K 0.50% 1/16W
R97	1-218-701-11	s	METAL, CHIP 2.4K 0.50% 1/16W
R98	1-218-674-11	s	METAL, CHIP 180 0.50% 1/16W
R99	1-218-701-11	s	METAL, CHIP 2.4K 0.50% 1/16W
R100	1-218-716-11	s	METAL, CHIP 10K 0.50% 1/16W
R101	1-218-716-11	s	METAL, CHIP 10K 0.50% 1/16W
R102	1-218-668-11	s	METAL, CHIP 100 0.50% 1/16W
R103	1-218-701-11	s	METAL, CHIP 2.4K 0.50% 1/16W
R105	1-218-740-11	s	METAL, CHIP 100K 0.50% 1/16W
R106	1-218-644-11	s	METAL, CHIP 10 0.50% 1/16W
R107	1-218-644-11	s	METAL, CHIP 10 0.50% 1/16W
R108	1-218-740-11	s	METAL, CHIP 100K 0.50% 1/16W
R109	1-218-674-11	s	METAL, CHIP 180 0.50% 1/16W
R110	1-218-711-11	s	METAL, CHIP 6.2K 0.50% 1/16W
R111	1-218-711-11	s	METAL, CHIP 6.2K 0.50% 1/16W
R112	1-218-704-11	s	METAL, CHIP 3.3K 0.50% 1/16W
R113	1-218-701-11	s	METAL, CHIP 2.4K 0.50% 1/16W
R115	1-218-740-11	s	METAL, CHIP 100K 0.50% 1/16W
R116	1-218-740-11	s	METAL, CHIP 100K 0.50% 1/16W
R117	1-218-711-11	s	METAL, CHIP 6.2K 0.50% 1/16W
R118	1-218-711-11	s	METAL, CHIP 6.2K 0.50% 1/16W
R119	1-218-704-11	s	METAL, CHIP 3.3K 0.50% 1/16W
R121	1-218-740-11	s	METAL, CHIP 100K 0.50% 1/16W
R122	1-218-740-11	s	METAL, CHIP 100K 0.50% 1/16W

(DCP-1 BOARD)

Ref. No. or Q'ty	Part No.	SP	Description
R123	1-218-711-11	s	METAL, CHIP 6.2K 0.50% 1/16W
R124	1-218-711-11	s	METAL, CHIP 6.2K 0.50% 1/16W
R125	1-218-704-11	s	METAL, CHIP 3.3K 0.50% 1/16W
R127	1-218-660-11	s	METAL, CHIP 47 0.50% 1/16W
R128	1-218-660-11	s	METAL, CHIP 47 0.50% 1/16W
R129	1-218-644-11	s	METAL, CHIP 10 0.50% 1/16W
R130	1-216-864-11	s	METAL, CHIP 0 5% 1/16W
R132	1-218-674-11	s	METAL, CHIP 180 0.50% 1/16W
R133	1-218-660-11	s	METAL, CHIP 47 0.50% 1/16W
R134	1-218-652-11	s	METAL, CHIP 22 0.50% 1/16W
R135	1-218-660-11	s	METAL, CHIP 47 0.50% 1/16W
R136	1-218-660-11	s	METAL, CHIP 47 0.50% 1/16W
R139	1-218-674-11	s	METAL, CHIP 180 0.50% 1/16W
R141	1-216-864-11	s	METAL, CHIP 0 5% 1/16W
R142	1-218-660-11	s	METAL, CHIP 47 0.50% 1/16W
R143	1-216-864-11	s	METAL, CHIP 0 5% 1/16W
R145	1-218-674-11	s	METAL, CHIP 180 0.50% 1/16W
R146	1-216-864-11	s	METAL, CHIP 0 5% 1/16W
R147	1-218-660-11	s	METAL, CHIP 47 0.50% 1/16W
R148	1-216-864-11	s	METAL, CHIP 0 5% 1/16W
R149	1-216-864-11	s	METAL, CHIP 0 5% 1/16W
R150	1-218-740-11	s	METAL, CHIP 100K 0.50% 1/16W
R152	1-218-656-11	s	METAL, CHIP 33 0.50% 1/16W
R153	1-216-864-11	s	METAL, CHIP 0 5% 1/16W
R154	1-218-740-11	s	METAL, CHIP 100K 0.50% 1/16W
R155	1-218-732-11	s	METAL, CHIP 47K 0.50% 1/16W
R156	1-218-732-11	s	METAL, CHIP 47K 0.50% 1/16W
R157	1-218-740-11	s	METAL, CHIP 100K 0.50% 1/16W
R158	1-218-692-11	s	METAL, CHIP 1K 0.50% 1/16W
R159	1-218-692-11	s	METAL, CHIP 1K 0.50% 1/16W
R160	1-218-660-11	s	METAL, CHIP 47 0.50% 1/16W
R163	1-218-740-11	s	METAL, CHIP 100K 0.50% 1/16W
R164	1-218-740-11	s	METAL, CHIP 100K 0.50% 1/16W
R165	1-216-864-11	s	METAL, CHIP 0 5% 1/16W
R166	1-218-740-11	s	METAL, CHIP 100K 0.50% 1/16W
R168	1-218-700-11	s	METAL, CHIP 2.2K 0.50% 1/16W
R169	1-218-700-11	s	METAL, CHIP 2.2K 0.50% 1/16W
R170	1-218-724-11	s	METAL, CHIP 22K 0.50% 1/16W
R171	1-216-864-11	s	METAL, CHIP 0 5% 1/16W
R172	1-216-864-11	s	METAL, CHIP 0 5% 1/16W
R173	1-218-692-11	s	METAL, CHIP 1K 0.50% 1/16W
R175	1-218-722-11	s	METAL, CHIP 18K 0.50% 1/16W
R176	1-218-696-11	s	METAL, CHIP 1.5K 0.50% 1/16W
R177	1-218-724-11	s	METAL, CHIP 22K 0.50% 1/16W
R178	1-218-732-11	s	METAL, CHIP 47K 0.50% 1/16W
R179	1-218-732-11	s	METAL, CHIP 47K 0.50% 1/16W
R182	1-218-660-11	s	METAL, CHIP 47 0.50% 1/16W
R185	1-216-864-11	s	METAL, CHIP 0 5% 1/16W
R187	1-218-660-11	s	METAL, CHIP 47 0.50% 1/16W
R188	1-218-668-11	s	METAL, CHIP 100 0.50% 1/16W
R190	1-218-660-11	s	METAL, CHIP 47 0.50% 1/16W
R191	1-218-644-11	s	METAL, CHIP 10 0.50% 1/16W
R193	1-218-716-11	s	METAL, CHIP 10K 0.50% 1/16W
R194	1-218-652-11	s	METAL, CHIP 22 0.50% 1/16W
R195	1-218-652-11	s	METAL, CHIP 22 0.50% 1/16W
R196	1-218-652-11	s	METAL, CHIP 22 0.50% 1/16W
R197	1-218-691-11	s	METAL, CHIP 910 0.50% 1/16W
R198	1-218-691-11	s	METAL, CHIP 910 0.50% 1/16W
R199	1-218-691-11	s	METAL, CHIP 910 0.50% 1/16W

(DCP-1 BOARD)

Ref. No. or Q'ty	Part No.	SP	Description
R200	1-218-660-11	s	METAL, CHIP 47 0.50% 1/16W
R201	1-216-864-11	s	METAL, CHIP 0 5% 1/16W
R202	1-216-864-11	s	METAL, CHIP 0 5% 1/16W
R205	1-218-660-11	s	METAL, CHIP 47 0.50% 1/16W
R206	1-218-660-11	s	METAL, CHIP 47 0.50% 1/16W
R207	1-218-700-11	s	METAL, CHIP 2.2K 0.50% 1/16W
R208	1-218-704-11	s	METAL, CHIP 3.3K 0.50% 1/16W
R209	1-216-864-11	s	METAL, CHIP 0 5% 1/16W
R210	1-216-864-11	s	METAL, CHIP 0 5% 1/16W
R211	1-216-864-11	s	METAL, CHIP 0 5% 1/16W
R212	1-216-864-11	s	METAL, CHIP 0 5% 1/16W
R213	1-218-692-11	s	METAL, CHIP 1K 0.50% 1/16W
R214	1-218-740-11	s	METAL, CHIP 100K 0.50% 1/16W
R215	1-218-724-11	s	METAL, CHIP 22K 0.50% 1/16W
R216	1-218-740-11	s	METAL, CHIP 100K 0.50% 1/16W
R217	1-218-660-11	s	METAL, CHIP 47 0.50% 1/16W
R218	1-218-660-11	s	METAL, CHIP 47 0.50% 1/16W
R219	1-216-857-11	s	METAL, CHIP 1M 5% 1/16W
R220	1-216-857-11	s	METAL, CHIP 1M 5% 1/16W
R221	1-216-857-11	s	METAL, CHIP 1M 5% 1/16W
R222	1-218-730-11	s	METAL, CHIP 39K 0.50% 1/16W
R223	1-218-730-11	s	METAL, CHIP 39K 0.50% 1/16W
R224	1-218-730-11	s	METAL, CHIP 39K 0.50% 1/16W
R225	1-218-692-11	s	METAL, CHIP 1K 0.50% 1/16W
R226	1-218-704-11	s	METAL, CHIP 3.3K 0.50% 1/16W
R227	1-218-704-11	s	METAL, CHIP 3.3K 0.50% 1/16W
R228	1-218-704-11	s	METAL, CHIP 3.3K 0.50% 1/16W
R229	1-218-728-11	s	METAL, CHIP 33K 0.50% 1/16W
R230	1-218-728-11	s	METAL, CHIP 33K 0.50% 1/16W
R231	1-218-726-11	s	METAL, CHIP 27K 0.50% 1/16W
R232	1-218-722-11	s	METAL, CHIP 18K 0.50% 1/16W
R233	1-218-724-11	s	METAL, CHIP 22K 0.50% 1/16W
R234	1-218-724-11	s	METAL, CHIP 22K 0.50% 1/16W
R235	1-218-704-11	s	METAL, CHIP 3.3K 0.50% 1/16W
R236	1-218-726-11	s	METAL, CHIP 27K 0.50% 1/16W
R237	1-218-722-11	s	METAL, CHIP 18K 0.50% 1/16W
R238	1-218-730-11	s	METAL, CHIP 39K 0.50% 1/16W
R239	1-218-668-11	s	METAL, CHIP 100 0.50% 1/16W
R240	1-218-668-11	s	METAL, CHIP 100 0.50% 1/16W
R241	1-218-668-11	s	METAL, CHIP 100 0.50% 1/16W
R242	1-218-668-11	s	METAL, CHIP 100 0.50% 1/16W
R243	1-218-692-11	s	METAL, CHIP 1K 0.50% 1/16W
R245	1-218-728-11	s	METAL, CHIP 33K 0.50% 1/16W
R246	1-218-728-11	s	METAL, CHIP 33K 0.50% 1/16W
R247	1-218-742-11	s	METAL, CHIP 120K 0.50% 1/16W
R248	1-218-660-11	s	METAL, CHIP 47 0.50% 1/16W
R249	1-218-660-11	s	METAL, CHIP 47 0.50% 1/16W
R250	1-216-864-11	s	METAL, CHIP 0 5% 1/16W
R251	1-218-728-11	s	METAL, CHIP 33K 0.50% 1/16W
R252	1-218-728-11	s	METAL, CHIP 33K 0.50% 1/16W
R257	1-218-734-11	s	METAL, CHIP 56K 0.50% 1/16W
R258	1-218-734-11	s	METAL, CHIP 56K 0.50% 1/16W
R259	1-218-716-11	s	METAL, CHIP 10K 0.50% 1/16W
R260	1-218-670-11	s	METAL, CHIP 120 0.50% 1/16W
R261	1-218-670-11	s	METAL, CHIP 120 0.50% 1/16W
R262	1-218-660-11	s	METAL, CHIP 47 0.50% 1/16W
R263	1-218-660-11	s	METAL, CHIP 47 0.50% 1/16W
R270	1-216-864-11	s	METAL, CHIP 0 5% 1/16W
R271	1-218-740-11	s	METAL, CHIP 100K 0.50% 1/16W

(DCP-1 BOARD)

Ref. No. or Q'ty	Part No.	SP	Description
R272	1-218-740-11	s	METAL, CHIP 100K 0.50% 1/16W
R273	1-218-660-11	s	METAL, CHIP 47 0.50% 1/16W
R274	1-218-668-11	s	METAL, CHIP 100 0.50% 1/16W
R275	1-218-668-11	s	METAL, CHIP 100 0.50% 1/16W
R276	1-218-680-11	s	METAL, CHIP 330 0.50% 1/16W
R277	1-218-665-11	s	METAL, CHIP 75 0.50% 1/16W
R278	1-218-730-11	s	METAL, CHIP 39K 0.50% 1/16W
R279	1-218-699-11	s	METAL, CHIP 2K 0.50% 1/16W
R280	1-218-692-11	s	METAL, CHIP 1K 0.50% 1/16W
R281	1-216-864-11	s	METAL, CHIP 0 5% 1/16W
R283	1-216-864-11	s	METAL, CHIP 0 5% 1/16W
R285	1-216-864-11	s	METAL, CHIP 0 5% 1/16W
R287	1-218-674-11	s	METAL, CHIP 180 0.50% 1/16W
R288	1-218-668-11	s	METAL, CHIP 100 0.50% 1/16W
R289	1-218-660-11	s	METAL, CHIP 47 0.50% 1/16W
R290	1-218-660-11	s	METAL, CHIP 47 0.50% 1/16W
R291	1-216-864-11	s	METAL, CHIP 0 5% 1/16W
R293	1-218-680-11	s	METAL, CHIP 330 0.50% 1/16W
R294	1-218-660-11	s	METAL, CHIP 47 0.50% 1/16W
R295	1-218-752-11	s	METAL, CHIP 330K 0.50% 1/16W
R296	1-218-728-11	s	METAL, CHIP 33K 0.50% 1/16W
R297	1-216-864-11	s	METAL, CHIP 0 5% 1/16W
R298	1-216-864-11	s	METAL, CHIP 0 5% 1/16W
R300	1-216-864-11	s	METAL, CHIP 0 5% 1/16W
R301	1-218-684-11	s	METAL, CHIP 470 0.50% 1/16W
R302	1-216-864-11	s	METAL, CHIP 0 5% 1/16W
R303	1-216-864-11	s	METAL, CHIP 0 5% 1/16W
R304	1-218-728-11	s	METAL, CHIP 33K 0.50% 1/16W
R305	1-218-728-11	s	METAL, CHIP 33K 0.50% 1/16W
R307	1-218-660-11	s	METAL, CHIP 47 0.50% 1/16W
R308	1-216-864-11	s	METAL, CHIP 0 5% 1/16W
R309	1-218-728-11	s	METAL, CHIP 33K 0.50% 1/16W
R310	1-218-660-11	s	METAL, CHIP 47 0.50% 1/16W
R311	1-216-857-11	s	METAL, CHIP 1M 5% 1/16W
R312	1-218-656-11	s	METAL, CHIP 33 0.50% 1/16W
R313	1-216-864-11	s	METAL, CHIP 0 5% 1/16W
R314	1-218-660-11	s	METAL, CHIP 47 0.50% 1/16W
R315	1-218-699-11	s	METAL, CHIP 2K 0.50% 1/16W
R316	1-218-692-11	s	METAL, CHIP 1K 0.50% 1/16W
R317	1-218-660-11	s	METAL, CHIP 47 0.50% 1/16W
R318	1-218-732-11	s	METAL, CHIP 47K 0.50% 1/16W
R319	1-218-732-11	s	METAL, CHIP 47K 0.50% 1/16W
R320	1-218-644-11	s	METAL, CHIP 10 0.50% 1/16W
R321	1-218-724-11	s	METAL, CHIP 22K 0.50% 1/16W
R322	1-218-732-11	s	METAL, CHIP 47K 0.50% 1/16W
R323	1-218-692-11	s	METAL, CHIP 1K 0.50% 1/16W
R324	1-218-692-11	s	METAL, CHIP 1K 0.50% 1/16W
R326	1-216-864-11	s	METAL, CHIP 0 5% 1/16W
R327	1-218-644-11	s	METAL, CHIP 10 0.50% 1/16W
R328	1-218-644-11	s	METAL, CHIP 10 0.50% 1/16W
R329	1-218-723-11	s	METAL, CHIP 20K 0.50% 1/16W
R330	1-218-723-11	s	METAL, CHIP 20K 0.50% 1/16W
R331	1-218-728-11	s	METAL, CHIP 33K 0.50% 1/16W
R332	1-218-728-11	s	METAL, CHIP 33K 0.50% 1/16W
R335	1-218-740-11	s	METAL, CHIP 100K 0.50% 1/16W
R336	1-218-740-11	s	METAL, CHIP 100K 0.50% 1/16W
R337	1-216-864-11	s	METAL, CHIP 0 5% 1/16W
R338	1-216-864-11	s	METAL, CHIP 0 5% 1/16W
R339	1-218-740-11	s	METAL, CHIP 100K 0.50% 1/16W

(DCP-1 BOARD)

Ref. No. or Q'ty	Part No.	SP	Description
R340	1-218-706-11	s	METAL, CHIP 3.9K 0.50% 1/16W
R341	1-218-740-11	s	METAL, CHIP 100K 0.50% 1/16W
R342	1-218-716-11	s	METAL, CHIP 10K 0.50% 1/16W
R343	1-218-740-11	s	METAL, CHIP 100K 0.50% 1/16W
R344	1-218-668-11	s	METAL, CHIP 100 0.50% 1/16W
R345	1-218-716-11	s	METAL, CHIP 10K 0.50% 1/16W
R346	1-218-740-11	s	METAL, CHIP 100K 0.50% 1/16W
R347	1-218-740-11	s	METAL, CHIP 100K 0.50% 1/16W
R348	1-218-740-11	s	METAL, CHIP 100K 0.50% 1/16W
R349	1-218-740-11	s	METAL, CHIP 100K 0.50% 1/16W
R350	1-218-740-11	s	METAL, CHIP 100K 0.50% 1/16W
R351	1-218-716-11	s	METAL, CHIP 10K 0.50% 1/16W
R352	1-218-740-11	s	METAL, CHIP 100K 0.50% 1/16W
R353	1-218-668-11	s	METAL, CHIP 100 0.50% 1/16W
R354	1-218-716-11	s	METAL, CHIP 10K 0.50% 1/16W
R355-359	1-218-740-11	s	METAL, CHIP 100K 0.50% 1/16W
R360	1-218-732-11	s	METAL, CHIP 47K 0.50% 1/16W
R361	1-218-740-11	s	METAL, CHIP 100K 0.50% 1/16W
R362	1-218-740-11	s	METAL, CHIP 100K 0.50% 1/16W
R363	1-218-732-11	s	METAL, CHIP 47K 0.50% 1/16W
R364	1-218-740-11	s	METAL, CHIP 100K 0.50% 1/16W
R365	1-218-665-11	s	METAL, CHIP 75 0.50% 1/16W
R367	1-218-704-11	s	METAL, CHIP 3.3K 0.50% 1/16W
R368	1-218-692-11	s	METAL, CHIP 1K 0.50% 1/16W
R369	1-218-660-11	s	METAL, CHIP 47 0.50% 1/16W
R370	1-218-712-11	s	METAL, CHIP 6.8K 0.50% 1/16W
R371	1-218-700-11	s	METAL, CHIP 2.2K 0.50% 1/16W
R372	1-218-706-11	s	METAL, CHIP 3.9K 0.50% 1/16W
R373	1-218-718-11	s	METAL, CHIP 12K 0.50% 1/16W
R374	1-218-716-11	s	METAL, CHIP 10K 0.50% 1/16W
R375	1-218-700-11	s	METAL, CHIP 2.2K 0.50% 1/16W
R376	1-218-716-11	s	METAL, CHIP 10K 0.50% 1/16W
R377	1-218-720-11	s	METAL, CHIP 15K 0.50% 1/16W
R378	1-218-706-11	s	METAL, CHIP 3.9K 0.50% 1/16W
R379	1-218-728-11	s	METAL, CHIP 33K 0.50% 1/16W
R380	1-218-692-11	s	METAL, CHIP 1K 0.50% 1/16W
R381	1-218-708-11	s	METAL, CHIP 4.7K 0.50% 1/16W
R382	1-218-732-11	s	METAL, CHIP 47K 0.50% 1/16W
R383	1-218-740-11	s	METAL, CHIP 100K 0.50% 1/16W
R384	1-218-732-11	s	METAL, CHIP 47K 0.50% 1/16W
R385	1-218-732-11	s	METAL, CHIP 47K 0.50% 1/16W
R386	1-218-740-11	s	METAL, CHIP 100K 0.50% 1/16W
R387	1-218-732-11	s	METAL, CHIP 47K 0.50% 1/16W
R388	1-218-665-11	s	METAL, CHIP 75 0.50% 1/16W
R389	1-218-692-11	s	METAL, CHIP 1K 0.50% 1/16W
R390	1-218-708-11	s	METAL, CHIP 4.7K 0.50% 1/16W
R391	1-218-732-11	s	METAL, CHIP 47K 0.50% 1/16W
R392	1-218-740-11	s	METAL, CHIP 100K 0.50% 1/16W
R393	1-218-740-11	s	METAL, CHIP 100K 0.50% 1/16W
R394	1-218-732-11	s	METAL, CHIP 47K 0.50% 1/16W
R395	1-218-732-11	s	METAL, CHIP 47K 0.50% 1/16W
R396	1-218-740-11	s	METAL, CHIP 100K 0.50% 1/16W
R398	1-218-740-11	s	METAL, CHIP 100K 0.50% 1/16W
R399	1-218-712-11	s	METAL, CHIP 6.8K 0.50% 1/16W
R400	1-218-664-11	s	METAL, CHIP 68 0.50% 1/16W
R401	1-218-740-11	s	METAL, CHIP 100K 0.50% 1/16W
R402	1-218-740-11	s	METAL, CHIP 100K 0.50% 1/16W
R403	1-218-708-11	s	METAL, CHIP 4.7K 0.50% 1/16W
R404	1-218-692-11	s	METAL, CHIP 1K 0.50% 1/16W

(DCP-1 BOARD)

Ref. No. or Q'ty	Part No.	SP	Description
R405	1-218-716-11	s	METAL, CHIP 10K 0.50% 1/16W
R406	1-218-710-11	s	METAL, CHIP 5.6K 0.50% 1/16W
R407	1-218-706-11	s	METAL, CHIP 3.9K 0.50% 1/16W
R408	1-218-724-11	s	METAL, CHIP 22K 0.50% 1/16W
R409	1-218-692-11	s	METAL, CHIP 1K 0.50% 1/16W
R410	1-218-708-11	s	METAL, CHIP 4.7K 0.50% 1/16W
R411	1-218-665-11	s	METAL, CHIP 75 0.50% 1/16W
R412	1-218-665-11	s	METAL, CHIP 75 0.50% 1/16W
R413	1-218-730-11	s	METAL, CHIP 39K 0.50% 1/16W
R414	1-218-692-11	s	METAL, CHIP 1K 0.50% 1/16W
R415	1-218-692-11	s	METAL, CHIP 1K 0.50% 1/16W
R416	1-218-716-11	s	METAL, CHIP 10K 0.50% 1/16W
R417	1-218-712-11	s	METAL, CHIP 6.8K 0.50% 1/16W
R418	1-218-708-11	s	METAL, CHIP 4.7K 0.50% 1/16W
R419	1-218-692-11	s	METAL, CHIP 1K 0.50% 1/16W
R420	1-218-692-11	s	METAL, CHIP 1K 0.50% 1/16W
R421	1-218-708-11	s	METAL, CHIP 4.7K 0.50% 1/16W
R422	1-218-710-11	s	METAL, CHIP 5.6K 0.50% 1/16W
R423	1-218-708-11	s	METAL, CHIP 4.7K 0.50% 1/16W
R424	1-218-668-11	s	METAL, CHIP 100 0.50% 1/16W
R425	1-218-708-11	s	METAL, CHIP 4.7K 0.50% 1/16W
R426	1-218-668-11	s	METAL, CHIP 100 0.50% 1/16W
R427	1-218-740-11	s	METAL, CHIP 100K 0.50% 1/16W
R428	1-218-708-11	s	METAL, CHIP 4.7K 0.50% 1/16W
R429	1-218-708-11	s	METAL, CHIP 4.7K 0.50% 1/16W
R430	1-218-692-11	s	METAL, CHIP 1K 0.50% 1/16W
R431	1-218-692-11	s	METAL, CHIP 1K 0.50% 1/16W
R432	1-218-710-11	s	METAL, CHIP 5.6K 0.50% 1/16W
R433	1-218-708-11	s	METAL, CHIP 4.7K 0.50% 1/16W
R435	1-218-665-11	s	METAL, CHIP 75 0.50% 1/16W
R436	1-218-730-11	s	METAL, CHIP 39K 0.50% 1/16W
R437	1-218-692-11	s	METAL, CHIP 1K 0.50% 1/16W
R438	1-218-668-11	s	METAL, CHIP 100 0.50% 1/16W
R439	1-218-691-11	s	METAL, CHIP 910 0.50% 1/16W
R440	1-218-672-11	s	METAL, CHIP 150 0.50% 1/16W
R441	1-218-686-11	s	METAL, CHIP 560 0.50% 1/16W
R443	1-218-694-11	s	METAL, CHIP 1.2K 0.50% 1/16W
R444	1-218-716-11	s	METAL, CHIP 10K 0.50% 1/16W
R445	1-218-692-11	s	METAL, CHIP 1K 0.50% 1/16W
R446	1-218-732-11	s	METAL, CHIP 47K 0.50% 1/16W
R447	1-218-663-11	s	METAL, CHIP 62 0.50% 1/16W
R448	1-218-663-11	s	METAL, CHIP 62 0.50% 1/16W
R449	1-218-663-11	s	METAL, CHIP 62 0.50% 1/16W
R456	1-218-692-11	s	METAL, CHIP 1K 0.50% 1/16W
R500	1-218-728-11	s	METAL, CHIP 33K 0.50% 1/16W
R501	1-218-728-11	s	METAL, CHIP 33K 0.50% 1/16W
R502	1-218-712-11	s	METAL, CHIP 6.8K 0.50% 1/16W
R503	1-218-728-11	s	METAL, CHIP 33K 0.50% 1/16W
R504	1-218-728-11	s	METAL, CHIP 33K 0.50% 1/16W
R505	1-218-728-11	s	METAL, CHIP 33K 0.50% 1/16W
R506	1-216-857-11	s	METAL, CHIP 1M 5% 1/16W
R507	1-218-692-11	s	METAL, CHIP 1K 0.50% 1/16W
R508	1-218-708-11	s	METAL, CHIP 4.7K 0.50% 1/16W
R509	1-218-716-11	s	METAL, CHIP 10K 0.50% 1/16W
R510	1-218-724-11	s	METAL, CHIP 22K 0.50% 1/16W
R511	1-218-716-11	s	METAL, CHIP 10K 0.50% 1/16W
R526	1-216-857-11	s	METAL, CHIP 1M 5% 1/16W
R529	1-216-857-11	s	METAL, CHIP 1M 5% 1/16W
R532	1-218-668-11	s	METAL, CHIP 100 0.50% 1/16W

(DCP-1 BOARD)

Ref. No. or Q'ty	Part No.	SP	Description
R533	1-216-857-11	s	METAL, CHIP 1M 5% 1/16W
R536	1-218-708-11	s	METAL, CHIP 4.7K 0.50% 1/16W
R537	1-218-732-11	s	METAL, CHIP 47K 0.50% 1/16W
R538	1-218-740-11	s	METAL, CHIP 100K 0.50% 1/16W
R539	1-216-857-11	s	METAL, CHIP 1M 5% 1/16W
R542	1-218-720-11	s	METAL, CHIP 15K 0.50% 1/16W
R543	1-218-728-11	s	METAL, CHIP 33K 0.50% 1/16W
R544	1-218-716-11	s	METAL, CHIP 10K 0.50% 1/16W
R545	1-218-716-11	s	METAL, CHIP 10K 0.50% 1/16W
R546	1-218-748-11	s	METAL, CHIP 220K 0.50% 1/16W
R547	1-218-740-11	s	METAL, CHIP 100K 0.50% 1/16W
R548	1-218-736-11	s	METAL, CHIP 68K 0.50% 1/16W
R549	1-218-692-11	s	METAL, CHIP 1K 0.50% 1/16W
R560	1-218-716-11	s	METAL, CHIP 10K 0.50% 1/16W
R561	1-218-716-11	s	METAL, CHIP 10K 0.50% 1/16W
R562	1-218-716-11	s	METAL, CHIP 10K 0.50% 1/16W
R563	1-218-748-11	s	METAL, CHIP 220K 0.50% 1/16W
R564	1-218-740-11	s	METAL, CHIP 100K 0.50% 1/16W
R565	1-218-736-11	s	METAL, CHIP 68K 0.50% 1/16W
R566	1-218-692-11	s	METAL, CHIP 1K 0.50% 1/16W
R567	1-216-857-11	s	METAL, CHIP 1M 5% 1/16W
R568	1-216-854-11	s	METAL, CHIP 560K 5% 1/16W
R569	1-218-752-11	s	METAL, CHIP 330K 0.50% 1/16W
R570	1-218-751-11	s	METAL, CHIP 300K 0.50% 1/16W
R571	1-218-752-11	s	METAL, CHIP 330K 0.50% 1/16W
R572	1-218-692-11	s	METAL, CHIP 1K 0.50% 1/16W
R573	1-218-644-11	s	METAL, CHIP 10 0.50% 1/16W
R574	1-218-668-11	s	METAL, CHIP 100 0.50% 1/16W
R576	1-218-668-11	s	METAL, CHIP 100 0.50% 1/16W
R577	1-218-660-11	s	METAL, CHIP 47 0.50% 1/16W
R578	1-218-740-11	s	METAL, CHIP 100K 0.50% 1/16W
R580	1-218-668-11	s	METAL, CHIP 100 0.50% 1/16W
R583	1-218-674-11	s	METAL, CHIP 180 0.50% 1/16W
R591	1-218-660-11	s	METAL, CHIP 47 0.50% 1/16W
R606	1-218-692-11	s	METAL, CHIP 1K 0.50% 1/16W
R607	1-218-716-11	s	METAL, CHIP 10K 0.50% 1/16W
R608	1-218-716-11	s	METAL, CHIP 10K 0.50% 1/16W
R609	1-218-740-11	s	METAL, CHIP 100K 0.50% 1/16W
R610	1-218-740-11	s	METAL, CHIP 100K 0.50% 1/16W
R611	1-218-692-11	s	METAL, CHIP 1K 0.50% 1/16W
R613	1-218-716-11	s	METAL, CHIP 10K 0.50% 1/16W
R614	1-218-668-11	s	METAL, CHIP 100 0.50% 1/16W
R615	1-218-668-11	s	METAL, CHIP 100 0.50% 1/16W
R622	1-218-692-11	s	METAL, CHIP 1K 0.50% 1/16W
R623	1-218-692-11	s	METAL, CHIP 1K 0.50% 1/16W
R625	1-218-728-11	s	METAL, CHIP 33K 0.50% 1/16W
R626	1-216-864-11	s	METAL, CHIP 0 5% 1/16W
R628	1-218-668-11	s	METAL, CHIP 100 0.50% 1/16W
R631	1-218-716-11	s	METAL, CHIP 10K 0.50% 1/16W
RB1	1-239-409-11	s	NETWORK RESISTOR (CHIP) 47
RB2	1-239-409-11	s	NETWORK RESISTOR (CHIP) 47
RB3	1-239-409-11	s	NETWORK RESISTOR (CHIP) 47
RB4	1-239-409-11	s	NETWORK RESISTOR (CHIP) 47
RB5	1-239-412-11	s	NETWORK RESISTOR (CHIP) 100
RB6	1-236-904-11	s	NETWORK RESISTOR (CHIP) 1.0K
RB7-12	1-239-790-12	s	NETWORK, 10 BIT LADDER
RB13	1-239-292-11	s	RESISTOR ARRAY, CHIP 33K
RB14	1-236-904-11	s	NETWORK RESISTOR (CHIP) 1.0K
RB15	1-236-904-11	s	NETWORK RESISTOR (CHIP) 1.0K

(DCP-1 BOARD)

Ref. No. or Q'ty	Part No.	SP	Description
RB16	1-239-436-11	s	NETWORK RESISTOR (CHIP) 33K
RB18	1-239-292-11	s	RESISTOR ARRAY, CHIP 33K
RB19	1-239-409-11	s	NETWORK RESISTOR (CHIP) 47
RB20	1-239-409-11	s	NETWORK RESISTOR (CHIP) 47
RB21	1-239-409-11	s	NETWORK RESISTOR (CHIP) 47
RB22	1-239-409-11	s	NETWORK RESISTOR (CHIP) 47
RB24	1-239-412-11	s	NETWORK RESISTOR (CHIP) 100
RB25	1-239-409-11	s	NETWORK RESISTOR (CHIP) 47
RB31	1-236-904-11	s	NETWORK RESISTOR (CHIP) 1.0K
RB32	1-239-412-11	s	NETWORK RESISTOR (CHIP) 100
RB33	1-239-436-11	s	NETWORK RESISTOR (CHIP) 33K
RB34	1-239-306-11	s	RESISTOR BLOCK, CHIP 10kx8
RB35	1-236-904-11	s	NETWORK RESISTOR (CHIP) 1.0K
RB36	1-239-436-11	s	NETWORK RESISTOR (CHIP) 33K
RB41	1-239-436-11	s	NETWORK RESISTOR (CHIP) 33K
RB42	1-239-436-11	s	NETWORK RESISTOR (CHIP) 33K
RB43	1-236-904-11	s	NETWORK RESISTOR (CHIP) 1.0K
RB44	1-239-292-11	s	RESISTOR ARRAY, CHIP 33K
RB45	1-239-292-11	s	RESISTOR ARRAY, CHIP 33K
RB46	1-236-904-11	s	NETWORK RESISTOR (CHIP) 1.0K
RB47	1-239-412-11	s	NETWORK RESISTOR (CHIP) 100
RB49	1-236-904-11	s	NETWORK RESISTOR (CHIP) 1.0K
RB51	1-236-904-11	s	NETWORK RESISTOR (CHIP) 1.0K
RB52	1-236-904-11	s	NETWORK RESISTOR (CHIP) 1.0K
RB53	1-239-412-11	s	NETWORK RESISTOR (CHIP) 100
RB54	1-239-409-11	s	NETWORK RESISTOR (CHIP) 47
RB55	1-239-409-11	s	NETWORK RESISTOR (CHIP) 47
S1	1-570-711-11	s	SWITCH, SLIDE
S2	1-762-119-21	s	SWITCH, TOGGLE
S4	1-692-271-31	s	SWITCH, SLIDE
X1	1-760-778-21	s	CRYSTAL 32.000000MHz
X2	1-760-273-11	s	CRYSTAL 20.000000MHz

DR-291 BOARD *For DNW-7/7P/90/90P/90WS/90WSP only

Ref. No. or Q'ty	Part No.	SP	Description
C1	1-126-400-11	s	ELECT, CHIP 22uF 20% 35V
C2	1-126-768-11	s	ELECT 2200uF 20% 16V
C3	1-104-823-11	s	TANTALUM, CHIP 47uF 20% 16V
C4	1-162-927-11	s	CERAMIC, CHIP 100PF 5% 50V
C5	1-126-400-11	s	ELECT, CHIP 22uF 20% 35V
C6	1-104-665-11	s	ELECT 100uF 20% 25V
C7	1-164-156-11	s	CERAMIC, CHIP 0.1uF 25V
C8	1-162-957-11	s	CERAMIC, CHIP 220PF 5% 50V
C9	1-126-400-11	s	ELECT, CHIP 22uF 20% 35V
C10	1-128-528-11	s	ELECT 470uF 20% 25V
C11	1-104-478-11	s	TANTALUM, CHIP 10uF 20% 35V
C12	1-104-478-11	s	TANTALUM, CHIP 10uF 20% 35V
C13	1-126-397-11	s	ELECT, CHIP 33uF 20% 25V
C14	1-126-942-61	s	ELECT 1000uF 20% 25V
C15	1-104-478-11	s	TANTALUM, CHIP 10uF 20% 35V
C16	1-113-981-11	s	TANTALUM, CHIP 22uF 20% 20V
C17-22	1-164-156-11	s	CERAMIC, CHIP 0.1uF 25V
C23	1-113-991-11	s	TANTALUM, CHIP 33uF 20% 16V
C24	1-164-156-11	s	CERAMIC, CHIP 0.1uF 25V
C25	1-107-686-11	s	TANTALUM, CHIP 4.7uF 20% 16V
C26	1-113-984-11	s	TANTALUM, CHIP 1.5uF 20% 35V
C27	1-113-981-11	s	TANTALUM, CHIP 22uF 20% 20V
C28	1-162-970-11	s	CERAMIC, CHIP 0.01uF 10% 25V
C29	1-107-686-11	s	TANTALUM, CHIP 4.7uF 20% 16V
C30	1-162-970-11	s	CERAMIC, CHIP 0.01uF 10% 25V
C31	1-104-851-11	s	TANTALUM, CHIP 10uF 20% 10V
C32	1-104-851-11	s	TANTALUM, CHIP 10uF 20% 10V
C34	1-113-985-11	s	TANTALUM, CHIP 10uF 20% 20V
C35	1-164-156-11	s	CERAMIC, CHIP 0.1uF 25V
C37	1-164-156-11	s	CERAMIC, CHIP 0.1uF 25V
C38	1-162-957-11	s	CERAMIC, CHIP 220PF 5% 50V
C39	1-110-398-11	s	TANTALUM, CHIP 15uF 20% 35V
C40	1-162-964-11	s	CERAMIC, CHIP 0.001uF 10% 50V
C41	1-113-991-11	s	TANTALUM, CHIP 33uF 20% 16V
C42	1-113-981-11	s	TANTALUM, CHIP 22uF 20% 20V
C43	1-113-991-11	s	TANTALUM, CHIP 33uF 20% 16V
C44	1-113-981-11	s	TANTALUM, CHIP 22uF 20% 20V
C45	1-164-156-11	s	CERAMIC, CHIP 0.1uF 25V
C46	1-164-156-11	s	CERAMIC, CHIP 0.1uF 25V
CN1	1-568-335-11	s	CONNECTOR, BOARD TO BOARD 18P
CN2	1-766-382-11	o	PIN, CONNECTOR (1.5MM)(SMD) 10P
CN3	1-695-442-21	o	CONNECTOR, PC BOARD 10P, MALE
CN5	1-568-335-11	s	CONNECTOR, BOARD TO BOARD 18P
CN6	1-691-942-11	s	CONNECTOR, BOARD TO BOARD 30P
D1	8-719-210-39	s	DIODE EC10QS04
D2	8-719-210-39	s	DIODE EC10QS04
D3	8-719-104-34	s	DIODE 1S2835
D4	8-719-104-34	s	DIODE 1S2835
D5	8-719-104-34	s	DIODE 1S2835
D6	8-719-800-76	s	DIODE 1SS226
D8	8-719-029-57	s	DIODE RD2.4UH-T1
D9	8-719-041-68	s	DIODE RD3.3UH(1)-T1
D10	8-719-948-47	s	DIODE HSM88AS
D11	8-719-948-47	s	DIODE HSM88AS
IC2	8-759-234-20	s	IC TC7S08F
IC3-8	8-759-172-33	s	IC UPD16502GS(1)

(DR-291 BOARD)

Ref. No. or Q'ty	Part No.	SP	Description
IC9	8-759-979-69	s	IC TSC426C0A
IC10	8-759-076-06	s	IC TL064CPW
IC12	8-759-337-40	s	IC NJM2904V(TE2)
IC13	8-759-209-97	s	IC TC4S81F
IC14	8-759-209-97	s	IC TC4S81F
IC17	8-759-082-61	s	IC TC4W53FU
IC18	8-759-082-61	s	IC TC4W53FU
IC19	8-759-635-27	s	IC M62352GP
IC20	8-759-175-04	s	IC PCF8574T-T
Q1	8-729-122-63	s	TRANSISTOR 2SA1226
Q2	8-729-421-71	s	TRANSISTOR 2SK620
Q3	8-729-120-28	s	TRANSISTOR 2SC1623-L5L6
Q4	8-729-141-48	s	TRANSISTOR 2SB624-BV345
Q6	8-729-141-48	s	TRANSISTOR 2SB624-BV345
Q7	8-729-141-48	s	TRANSISTOR 2SB624-BV345
Q8	8-729-120-28	s	TRANSISTOR 2SC1623-L5L6
Q9	8-729-140-47	s	TRANSISTOR 2SC3735-B34
Q10	8-729-112-65	s	TRANSISTOR 2SA1462-Y33
Q11	8-729-112-65	s	TRANSISTOR 2SA1462-Y33
Q12	8-729-140-47	s	TRANSISTOR 2SC3735-B34
R1	1-218-644-11	s	METAL, CHIP 10 0.50% 1/16W
R2	1-218-644-11	s	METAL, CHIP 10 0.50% 1/16W
R3	1-218-644-11	s	METAL, CHIP 10 0.50% 1/16W
R4	1-218-716-11	s	METAL, CHIP 10K 0.50% 1/16W
R5	1-218-718-11	s	METAL, CHIP 12K 0.50% 1/16W
R6	1-218-704-11	s	METAL, CHIP 3.3K 0.50% 1/16W
R7	1-218-716-11	s	METAL, CHIP 10K 0.50% 1/16W
R8	1-218-692-11	s	METAL, CHIP 1K 0.50% 1/16W
R9	1-218-668-11	s	METAL, CHIP 100 0.50% 1/16W
R10	1-218-732-11	s	METAL, CHIP 47K 0.50% 1/16W
R11	1-218-724-11	s	METAL, CHIP 22K 0.50% 1/16W
R12	1-218-696-11	s	METAL, CHIP 1.5K 0.50% 1/16W
R13	1-218-648-11	s	METAL, CHIP 15 0.50% 1/16W
R14	1-218-648-11	s	METAL, CHIP 15 0.50% 1/16W
R15	1-218-668-11	s	METAL, CHIP 100 0.50% 1/16W
R18	1-218-656-11	s	METAL, CHIP 33 0.50% 1/16W
R19	1-218-728-11	s	METAL, CHIP 33K 0.50% 1/16W
R20	1-218-728-11	s	METAL, CHIP 33K 0.50% 1/16W
R21	1-218-716-11	s	METAL, CHIP 10K 0.50% 1/16W
R22	1-218-728-11	s	METAL, CHIP 33K 0.50% 1/16W
R23-29	1-218-728-11	s	METAL, CHIP 33K 0.50% 1/16W
R30	1-218-692-11	s	METAL, CHIP 1K 0.50% 1/16W
R31	1-218-740-11	s	METAL, CHIP 100K 0.50% 1/16W
R32	1-218-740-11	s	METAL, CHIP 100K 0.50% 1/16W
R33-51	1-216-864-11	s	METAL, CHIP 0 5% 1/16W
R52	1-218-728-11	s	METAL, CHIP 33K 0.50% 1/16W
R53	1-218-728-11	s	METAL, CHIP 33K 0.50% 1/16W
R54-58	1-216-864-11	s	METAL, CHIP 0 5% 1/16W
R59	1-218-644-11	s	METAL, CHIP 10 0.50% 1/16W
R60	1-218-725-11	s	METAL, CHIP 24K 0.50% 1/16W
R61	1-218-725-11	s	METAL, CHIP 24K 0.50% 1/16W
R62	1-218-725-11	s	METAL, CHIP 24K 0.50% 1/16W
R63	1-218-644-11	s	METAL, CHIP 10 0.50% 1/16W
R64	1-218-732-11	s	METAL, CHIP 47K 0.50% 1/16W
R65	1-218-732-11	s	METAL, CHIP 47K 0.50% 1/16W
R66	1-218-732-11	s	METAL, CHIP 47K 0.50% 1/16W
R67	1-218-644-11	s	METAL, CHIP 10 0.50% 1/16W
R68	1-218-737-11	s	METAL, CHIP 75K 0.50% 1/16W

(DR-291 BOARD)

Ref. No. or Q'ty	Part No.	SP	Description
R69	1-218-732-11	s	METAL, CHIP 47K 0.50% 1/16W
R70	1-218-716-11	s	METAL, CHIP 10K 0.50% 1/16W
R71	1-218-716-11	s	METAL, CHIP 10K 0.50% 1/16W
R72	1-218-701-11	s	METAL, CHIP 2.4K 0.50% 1/16W
R73	1-218-712-11	s	METAL, CHIP 6.8K 0.50% 1/16W
R74	1-218-720-11	s	METAL, CHIP 15K 0.50% 1/16W
R75	1-218-730-11	s	METAL, CHIP 39K 0.50% 1/16W
R76	1-218-701-11	s	METAL, CHIP 2.4K 0.50% 1/16W
R77	1-218-712-11	s	METAL, CHIP 6.8K 0.50% 1/16W
R78	1-218-720-11	s	METAL, CHIP 15K 0.50% 1/16W
R79	1-218-730-11	s	METAL, CHIP 39K 0.50% 1/16W
R80	1-218-668-11	s	METAL, CHIP 100 0.50% 1/16W
R81	1-218-644-11	s	METAL, CHIP 10 0.50% 1/16W
R82	1-218-644-11	s	METAL, CHIP 10 0.50% 1/16W
R83	1-218-644-11	s	METAL, CHIP 10 0.50% 1/16W
R84	1-218-692-11	s	METAL, CHIP 1K 0.50% 1/16W
R85	1-218-716-11	s	METAL, CHIP 10K 0.50% 1/16W
R86	1-218-712-11	s	METAL, CHIP 6.8K 0.50% 1/16W
R87	1-218-716-11	s	METAL, CHIP 10K 0.50% 1/16W
R88	1-218-703-11	s	METAL, CHIP 3K 0.50% 1/16W
R89	1-218-716-11	s	METAL, CHIP 10K 0.50% 1/16W
R92	1-218-740-11	s	METAL, CHIP 100K 0.50% 1/16W
R93	1-218-740-11	s	METAL, CHIP 100K 0.50% 1/16W
R94	1-218-740-11	s	METAL, CHIP 100K 0.50% 1/16W
R96	1-218-728-11	s	METAL, CHIP 33K 0.50% 1/16W
R98	1-218-728-11	s	METAL, CHIP 33K 0.50% 1/16W

DUS-42 BOARD

Ref. No. or Q'ty	Part No.	SP	Description
C1	1-164-217-11	s	CERAMIC, 150PF 5% 50V
C2	1-162-920-11	s	CERAMIC, CHIP 27PF 5% 50V
C4	1-162-911-11	s	CERAMIC, CHIP 6PF 50V
C5	1-164-217-11	s	CERAMIC, 150PF 5% 50V
L1	1-410-376-21	s	INDUCTOR, CHIP 3.9uH
L2	1-410-374-11	s	INDUCTOR, CHIP 2.7uH
R1	1-218-672-11	s	METAL, CHIP 150 0.50% 1/16W
R2	1-218-672-11	s	METAL, CHIP 150 0.50% 1/16W

DUS-48 BOARD

Ref. No. or Q'ty	Part No.	SP	Description
1pc	1-664-954-11	o	PRINTED CIRCUIT BOARD, DUS-48
R1	1-218-233-11	s	METAL, CHIP 47 5% 1/2W
R2	1-218-234-11	s	METAL, CHIP 68 5% 1/2W

DUS-54 BOARD

Ref. No. or Q'ty	Part No.	SP	Description
Q1	8-729-117-32	s	TRANSISTOR 2SC4177
R1	1-218-708-11	s	METAL, CHIP 4.7K 0.50% 1/16W
R2	1-218-692-11	s	METAL, CHIP 1K 0.50% 1/16W

DUS-55 BOARD

Ref. No. or Q'ty	Part No.	SP	Description
C1	1-164-227-11	s	CERAMIC, CHIP 0.022uF 10% 25V
IC1	8-759-080-06	s	IC TC74VHC574FS(EL)

DUS-56 BOARD

Ref. No. or Q'ty	Part No.	SP	Description
C1	1-164-227-11	s	CERAMIC, CHIP 0.022uF 10% 25V
IC1	8-759-186-53	s	IC TC74VHC163F
IC2	8-759-196-93	s	IC TC7SH00FU-TE85R
IC3	8-759-196-96	s	IC TC7SH08FU-TE85R

DUS-194 BOARD

Ref. No. or Q'ty	Part No.	SP	Description
1pc	1-623-599-12	o	PRINTED CIRCUIT BOARD, DUS-194
D1	8-719-938-72	s	DIODE SB01-05CP
R1	1-218-740-11	s	METAL, CHIP 100K 0.50% 1/16W

DVP-1 BOARD

Ref. No. or Q'ty	Part No.	SP	Description
DUS-48 board and DUS-194 board are included in this board.			
1pc	A-8277-533-A	o	MOUNTED CIRCUIT BOARD, DVP-1
2pcs	3-603-737-01	o	LEVER,BOARD
5pcs	3-729-061-01	s	SCREW M2X4.5 (TYPE 1)
C1	1-107-826-11	s	CERAMIC, CHIP 0.1uF 10% 16V
C2	1-107-826-11	s	CERAMIC, CHIP 0.1uF 10% 16V
C3	1-107-686-11	s	TANTALUM, CHIP 4.7uF 20% 16V
C4	1-113-994-11	s	TANTALUM, CHIP 6.8uF 20% 16V
C5	1-104-851-11	s	TANTALUM, CHIP 10uF 20% 10V
C6	1-113-994-11	s	TANTALUM, CHIP 6.8uF 20% 16V
C7	1-107-826-11	s	CERAMIC, CHIP 0.1uF 10% 16V
C8	1-107-826-11	s	CERAMIC, CHIP 0.1uF 10% 16V
C9	1-162-915-11	s	CERAMIC, CHIP 10PF 50V
C10	1-162-915-11	s	CERAMIC, CHIP 10PF 50V
C11	1-113-994-11	s	TANTALUM, CHIP 6.8uF 20% 16V
C12	1-107-826-11	s	CERAMIC, CHIP 0.1uF 10% 16V
C13	1-107-826-11	s	CERAMIC, CHIP 0.1uF 10% 16V
C14	1-107-826-11	s	CERAMIC, CHIP 0.1uF 10% 16V
C15	1-113-994-11	s	TANTALUM, CHIP 6.8uF 20% 16V
C16	1-107-826-11	s	CERAMIC, CHIP 0.1uF 10% 16V
C17	1-107-826-11	s	CERAMIC, CHIP 0.1uF 10% 16V
C18	1-104-851-11	s	TANTALUM, CHIP 10uF 20% 10V
C19	1-107-826-11	s	CERAMIC, CHIP 0.1uF 10% 16V
C20	1-107-826-11	s	CERAMIC, CHIP 0.1uF 10% 16V
C21	1-162-964-11	s	CERAMIC, CHIP 0.001uF 10% 50V
C22	1-162-915-11	s	CERAMIC, CHIP 10PF 50V
C23	1-162-915-11	s	CERAMIC, CHIP 10PF 50V
C25	1-164-227-11	s	CERAMIC, CHIP 0.022uF 10% 25V
C26-30	1-107-826-11	s	CERAMIC, CHIP 0.1uF 10% 16V
C201	1-107-826-11	s	CERAMIC, CHIP 0.1uF 10% 16V
C202	1-107-826-11	s	CERAMIC, CHIP 0.1uF 10% 16V
C203	1-164-315-11	s	CERAMIC, CHIP 470PF 5% 50V
C204	1-164-315-11	s	CERAMIC, CHIP 470PF 5% 50V
C205	1-107-826-11	s	CERAMIC, CHIP 0.1uF 10% 16V
C210	1-107-826-11	s	CERAMIC, CHIP 0.1uF 10% 16V
C211	1-107-826-11	s	CERAMIC, CHIP 0.1uF 10% 16V
C212	1-164-315-11	s	CERAMIC, CHIP 470PF 5% 50V
C213	1-164-315-11	s	CERAMIC, CHIP 470PF 5% 50V
C214	1-107-826-11	s	CERAMIC, CHIP 0.1uF 10% 16V
C215	1-107-826-11	s	CERAMIC, CHIP 0.1uF 10% 16V
C216	1-107-826-11	s	CERAMIC, CHIP 0.1uF 10% 16V
C217	1-107-826-11	s	CERAMIC, CHIP 0.1uF 10% 16V
C220	1-107-826-11	s	CERAMIC, CHIP 0.1uF 10% 16V
C222	1-107-826-11	s	CERAMIC, CHIP 0.1uF 10% 16V
C223	1-162-958-11	s	CERAMIC, CHIP 270PF 5% 50V
C224	1-165-176-11	s	CERAMIC 0.047uF 10% 16V
C226	1-164-227-11	s	CERAMIC, CHIP 0.022uF 10% 25V
C227	1-107-826-11	s	CERAMIC, CHIP 0.1uF 10% 16V
C228	1-107-826-11	s	CERAMIC, CHIP 0.1uF 10% 16V
C229	1-162-970-11	s	CERAMIC, CHIP 0.01uF 10% 25V
C230	1-162-970-11	s	CERAMIC, CHIP 0.01uF 10% 25V
C231	1-107-826-11	s	CERAMIC, CHIP 0.1uF 10% 16V
C232	1-107-826-11	s	CERAMIC, CHIP 0.1uF 10% 16V
C233	1-107-826-11	s	CERAMIC, CHIP 0.1uF 10% 16V
C234	1-162-970-11	s	CERAMIC, CHIP 0.01uF 10% 25V
C235	1-162-970-11	s	CERAMIC, CHIP 0.01uF 10% 25V
C260	1-164-227-11	s	CERAMIC, CHIP 0.022uF 10% 25V
C261	1-164-227-11	s	CERAMIC, CHIP 0.022uF 10% 25V

(DVP-1 BOARD)

Ref. No. or Q'ty	Part No.	SP	Description
C262	1-162-964-11	s	CERAMIC, CHIP 0.001uF 10% 50V
C263	1-164-227-11	s	CERAMIC, CHIP 0.022uF 10% 25V
C300	1-162-970-11	s	CERAMIC, CHIP 0.01uF 10% 25V
C301	1-107-826-11	s	CERAMIC, CHIP 0.1uF 10% 16V
C302	1-107-826-11	s	CERAMIC, CHIP 0.1uF 10% 16V
C303	1-162-970-11	s	CERAMIC, CHIP 0.01uF 10% 25V
C304	1-107-826-11	s	CERAMIC, CHIP 0.1uF 10% 16V
C305	1-164-315-11	s	CERAMIC, CHIP 470PF 5% 50V
C306	1-107-826-11	s	CERAMIC, CHIP 0.1uF 10% 16V
C307	1-162-970-11	s	CERAMIC, CHIP 0.01uF 10% 25V
C308	1-162-926-11	s	CERAMIC, CHIP 82PF 5% 50V
C309	1-162-926-11	s	CERAMIC, CHIP 82PF 5% 50V
C310	1-162-926-11	s	CERAMIC, CHIP 82PF 5% 50V
C311	1-162-970-11	s	CERAMIC, CHIP 0.01uF 10% 25V
C312	1-162-970-11	s	CERAMIC, CHIP 0.01uF 10% 25V
C313	1-162-970-11	s	CERAMIC, CHIP 0.01uF 10% 25V
C314	1-164-227-11	s	CERAMIC, CHIP 0.022uF 10% 25V
C315	1-164-315-11	s	CERAMIC, CHIP 470PF 5% 50V
C316	1-162-970-11	s	CERAMIC, CHIP 0.01uF 10% 25V
C317	1-107-826-11	s	CERAMIC, CHIP 0.1uF 10% 16V
C318	1-162-970-11	s	CERAMIC, CHIP 0.01uF 10% 25V
C319	1-162-970-11	s	CERAMIC, CHIP 0.01uF 10% 25V
C320	1-162-970-11	s	CERAMIC, CHIP 0.01uF 10% 25V
C321	1-162-970-11	s	CERAMIC, CHIP 0.01uF 10% 25V
C322	1-107-826-11	s	CERAMIC, CHIP 0.1uF 10% 16V
C323	1-107-826-11	s	CERAMIC, CHIP 0.1uF 10% 16V
C324	1-162-970-11	s	CERAMIC, CHIP 0.01uF 10% 25V
C325	1-107-826-11	s	CERAMIC, CHIP 0.1uF 10% 16V
C326	1-162-970-11	s	CERAMIC, CHIP 0.01uF 10% 25V
C327	1-162-928-11	s	CERAMIC, CHIP 120PF 5% 50V
C328	1-164-315-11	s	CERAMIC, CHIP 470PF 5% 50V
C329	1-162-969-11	s	CERAMIC, CHIP 0.0068uF 10% 25V
C330	1-162-970-11	s	CERAMIC, CHIP 0.01uF 10% 25V
C331	1-162-970-11	s	CERAMIC, CHIP 0.01uF 10% 25V
C332	1-162-927-11	s	CERAMIC, CHIP 100PF 5% 50V
C333	1-162-927-11	s	CERAMIC, CHIP 100PF 5% 50V
C334	1-162-927-11	s	CERAMIC, CHIP 100PF 5% 50V
C335-339	1-107-826-11	s	CERAMIC, CHIP 0.1uF 10% 16V
C340	1-162-970-11	s	CERAMIC, CHIP 0.01uF 10% 25V
C341	1-113-991-11	s	TANTALUM, CHIP 33uF 20% 16V
C342	1-113-991-11	s	TANTALUM, CHIP 33uF 20% 16V
C343	1-107-826-11	s	CERAMIC, CHIP 0.1uF 10% 16V
C344	1-162-970-11	s	CERAMIC, CHIP 0.01uF 10% 25V
C345	1-162-970-11	s	CERAMIC, CHIP 0.01uF 10% 25V
C346	1-162-970-11	s	CERAMIC, CHIP 0.01uF 10% 25V
C347	1-162-970-11	s	CERAMIC, CHIP 0.01uF 10% 25V
C348	1-162-928-11	s	CERAMIC, CHIP 120PF 5% 50V
C349	1-164-315-11	s	CERAMIC, CHIP 470PF 5% 50V
C350	1-107-826-11	s	CERAMIC, CHIP 0.1uF 10% 16V
C351	1-107-826-11	s	CERAMIC, CHIP 0.1uF 10% 16V
C352	1-164-227-11	s	CERAMIC, CHIP 0.022uF 10% 25V
C353	1-162-927-11	s	CERAMIC, CHIP 100PF 5% 50V
C354	1-162-964-11	s	CERAMIC, CHIP 0.001uF 10% 50V
C355	1-107-826-11	s	CERAMIC, CHIP 0.1uF 10% 16V
C356	1-107-826-11	s	CERAMIC, CHIP 0.1uF 10% 16V
C400	1-162-970-11	s	CERAMIC, CHIP 0.01uF 10% 25V
C401	1-107-826-11	s	CERAMIC, CHIP 0.1uF 10% 16V
C402	1-107-826-11	s	CERAMIC, CHIP 0.1uF 10% 16V
C403	1-162-970-11	s	CERAMIC, CHIP 0.01uF 10% 25V

(DVP-1 BOARD)

Ref. No. or Q'ty	Part No.	SP	Description
C404	1-107-826-11	s	CERAMIC, CHIP 0.1uF 10% 16V
C405	1-164-315-11	s	CERAMIC, CHIP 470PF 5% 50V
C406	1-107-826-11	s	CERAMIC, CHIP 0.1uF 10% 16V
C407	1-162-970-11	s	CERAMIC, CHIP 0.01uF 10% 25V
C408	1-162-926-11	s	CERAMIC, CHIP 82PF 5% 50V
C409	1-162-926-11	s	CERAMIC, CHIP 82PF 5% 50V
C410	1-162-926-11	s	CERAMIC, CHIP 82PF 5% 50V
C411	1-162-970-11	s	CERAMIC, CHIP 0.01uF 10% 25V
C412	1-162-970-11	s	CERAMIC, CHIP 0.01uF 10% 25V
C413	1-162-970-11	s	CERAMIC, CHIP 0.01uF 10% 25V
C414	1-164-227-11	s	CERAMIC, CHIP 0.022uF 10% 25V
C415	1-164-315-11	s	CERAMIC, CHIP 470PF 5% 50V
C416	1-162-970-11	s	CERAMIC, CHIP 0.01uF 10% 25V
C417	1-107-826-11	s	CERAMIC, CHIP 0.1uF 10% 16V
C418	1-162-970-11	s	CERAMIC, CHIP 0.01uF 10% 25V
C419	1-162-970-11	s	CERAMIC, CHIP 0.01uF 10% 25V
C420	1-162-970-11	s	CERAMIC, CHIP 0.01uF 10% 25V
C421	1-162-970-11	s	CERAMIC, CHIP 0.01uF 10% 25V
C422	1-107-826-11	s	CERAMIC, CHIP 0.1uF 10% 16V
C423	1-107-826-11	s	CERAMIC, CHIP 0.1uF 10% 16V
C424	1-162-970-11	s	CERAMIC, CHIP 0.01uF 10% 25V
C425	1-107-826-11	s	CERAMIC, CHIP 0.1uF 10% 16V
C426	1-162-970-11	s	CERAMIC, CHIP 0.01uF 10% 25V
C427	1-162-928-11	s	CERAMIC, CHIP 120PF 5% 50V
C428	1-164-315-11	s	CERAMIC, CHIP 470PF 5% 50V
C429	1-162-969-11	s	CERAMIC, CHIP 0.0068uF 10% 25V
C430	1-162-970-11	s	CERAMIC, CHIP 0.01uF 10% 25V
C431	1-162-970-11	s	CERAMIC, CHIP 0.01uF 10% 25V
C432	1-162-927-11	s	CERAMIC, CHIP 100PF 5% 50V
C433	1-162-927-11	s	CERAMIC, CHIP 100PF 5% 50V
C434	1-162-927-11	s	CERAMIC, CHIP 100PF 5% 50V
C435-439	1-107-826-11	s	CERAMIC, CHIP 0.1uF 10% 16V
C440	1-162-970-11	s	CERAMIC, CHIP 0.01uF 10% 25V
C441	1-113-991-11	s	TANTALUM, CHIP 33uF 20% 16V
C442	1-113-991-11	s	TANTALUM, CHIP 33uF 20% 16V
C444	1-162-970-11	s	CERAMIC, CHIP 0.01uF 10% 25V
C445	1-162-970-11	s	CERAMIC, CHIP 0.01uF 10% 25V
C446	1-162-970-11	s	CERAMIC, CHIP 0.01uF 10% 25V
C447	1-162-970-11	s	CERAMIC, CHIP 0.01uF 10% 25V
C448	1-162-928-11	s	CERAMIC, CHIP 120PF 5% 50V
C449	1-164-315-11	s	CERAMIC, CHIP 470PF 5% 50V
C452	1-164-227-11	s	CERAMIC, CHIP 0.022uF 10% 25V
C453	1-162-927-11	s	CERAMIC, CHIP 100PF 5% 50V
C454	1-162-964-11	s	CERAMIC, CHIP 0.001uF 10% 50V
C455	1-107-826-11	s	CERAMIC, CHIP 0.1uF 10% 16V
C500	1-162-970-11	s	CERAMIC, CHIP 0.01uF 10% 25V
C501	1-107-826-11	s	CERAMIC, CHIP 0.1uF 10% 16V
C502	1-107-826-11	s	CERAMIC, CHIP 0.1uF 10% 16V
C503	1-162-970-11	s	CERAMIC, CHIP 0.01uF 10% 25V
C504	1-107-826-11	s	CERAMIC, CHIP 0.1uF 10% 16V
C505	1-164-315-11	s	CERAMIC, CHIP 470PF 5% 50V
C506	1-107-826-11	s	CERAMIC, CHIP 0.1uF 10% 16V
C507	1-162-970-11	s	CERAMIC, CHIP 0.01uF 10% 25V
C508	1-162-926-11	s	CERAMIC, CHIP 82PF 5% 50V
C509	1-162-926-11	s	CERAMIC, CHIP 82PF 5% 50V
C510	1-162-926-11	s	CERAMIC, CHIP 82PF 5% 50V
C511	1-162-970-11	s	CERAMIC, CHIP 0.01uF 10% 25V
C512	1-162-970-11	s	CERAMIC, CHIP 0.01uF 10% 25V
C513	1-162-970-11	s	CERAMIC, CHIP 0.01uF 10% 25V

(DVP-1 BOARD)

Ref. No. or Q'ty	Part No.	SP	Description
C514	1-164-227-11	s	CERAMIC, CHIP 0.022uF 10% 25V
C515	1-164-315-11	s	CERAMIC, CHIP 470PF 5% 50V
C516	1-162-970-11	s	CERAMIC, CHIP 0.01uF 10% 25V
C517	1-107-826-11	s	CERAMIC, CHIP 0.1uF 10% 16V
C518	1-162-970-11	s	CERAMIC, CHIP 0.01uF 10% 25V
C519	1-162-970-11	s	CERAMIC, CHIP 0.01uF 10% 25V
C520	1-162-970-11	s	CERAMIC, CHIP 0.01uF 10% 25V
C521	1-162-970-11	s	CERAMIC, CHIP 0.01uF 10% 25V
C522	1-107-826-11	s	CERAMIC, CHIP 0.1uF 10% 16V
C523	1-107-826-11	s	CERAMIC, CHIP 0.1uF 10% 16V
C524	1-162-970-11	s	CERAMIC, CHIP 0.01uF 10% 25V
C525	1-107-826-11	s	CERAMIC, CHIP 0.1uF 10% 16V
C526	1-162-970-11	s	CERAMIC, CHIP 0.01uF 10% 25V
C527	1-162-928-11	s	CERAMIC, CHIP 120PF 5% 50V
C528	1-164-315-11	s	CERAMIC, CHIP 470PF 5% 50V
C529	1-162-969-11	s	CERAMIC, CHIP 0.0068uF 10% 25V
C530	1-162-970-11	s	CERAMIC, CHIP 0.01uF 10% 25V
C531	1-162-970-11	s	CERAMIC, CHIP 0.01uF 10% 25V
C532	1-162-927-11	s	CERAMIC, CHIP 100PF 5% 50V
C533	1-162-927-11	s	CERAMIC, CHIP 100PF 5% 50V
C534	1-162-927-11	s	CERAMIC, CHIP 100PF 5% 50V
C535-539	1-107-826-11	s	CERAMIC, CHIP 0.1uF 10% 16V
C540	1-162-970-11	s	CERAMIC, CHIP 0.01uF 10% 25V
C541	1-113-991-11	s	TANTALUM, CHIP 33uF 20% 16V
C542	1-113-991-11	s	TANTALUM, CHIP 33uF 20% 16V
C543	1-107-826-11	s	CERAMIC, CHIP 0.1uF 10% 16V
C544	1-162-970-11	s	CERAMIC, CHIP 0.01uF 10% 25V
C545	1-162-970-11	s	CERAMIC, CHIP 0.01uF 10% 25V
C546	1-162-970-11	s	CERAMIC, CHIP 0.01uF 10% 25V
C547	1-162-970-11	s	CERAMIC, CHIP 0.01uF 10% 25V
C548	1-162-928-11	s	CERAMIC, CHIP 120PF 5% 50V
C549	1-164-315-11	s	CERAMIC, CHIP 470PF 5% 50V
C550	1-107-826-11	s	CERAMIC, CHIP 0.1uF 10% 16V
C551	1-107-826-11	s	CERAMIC, CHIP 0.1uF 10% 16V
C552	1-164-227-11	s	CERAMIC, CHIP 0.022uF 10% 25V
C553	1-162-927-11	s	CERAMIC, CHIP 100PF 5% 50V
C554	1-162-964-11	s	CERAMIC, CHIP 0.001uF 10% 50V
C600	1-162-970-11	s	CERAMIC, CHIP 0.01uF 10% 25V
C601	1-107-826-11	s	CERAMIC, CHIP 0.1uF 10% 16V
C602	1-107-826-11	s	CERAMIC, CHIP 0.1uF 10% 16V
C603	1-162-970-11	s	CERAMIC, CHIP 0.01uF 10% 25V
C604	1-107-826-11	s	CERAMIC, CHIP 0.1uF 10% 16V
C605	1-164-315-11	s	CERAMIC, CHIP 470PF 5% 50V
C606	1-107-826-11	s	CERAMIC, CHIP 0.1uF 10% 16V
C607	1-162-970-11	s	CERAMIC, CHIP 0.01uF 10% 25V
C608	1-162-926-11	s	CERAMIC, CHIP 82PF 5% 50V
C609	1-162-926-11	s	CERAMIC, CHIP 82PF 5% 50V
C610	1-162-926-11	s	CERAMIC, CHIP 82PF 5% 50V
C611	1-162-970-11	s	CERAMIC, CHIP 0.01uF 10% 25V
C612	1-162-970-11	s	CERAMIC, CHIP 0.01uF 10% 25V
C613	1-162-970-11	s	CERAMIC, CHIP 0.01uF 10% 25V
C614	1-164-227-11	s	CERAMIC, CHIP 0.022uF 10% 25V
C615	1-164-315-11	s	CERAMIC, CHIP 470PF 5% 50V
C616	1-162-970-11	s	CERAMIC, CHIP 0.01uF 10% 25V
C617	1-107-826-11	s	CERAMIC, CHIP 0.1uF 10% 16V
C618	1-162-970-11	s	CERAMIC, CHIP 0.01uF 10% 25V
C619	1-162-970-11	s	CERAMIC, CHIP 0.01uF 10% 25V
C620	1-162-970-11	s	CERAMIC, CHIP 0.01uF 10% 25V
C621	1-162-970-11	s	CERAMIC, CHIP 0.01uF 10% 25V

(DVP-1 BOARD)

Ref. No. or Q'ty	Part No.	SP	Description
C622	1-107-826-11	s	CERAMIC, CHIP 0.1uF 10% 16V
C623	1-107-826-11	s	CERAMIC, CHIP 0.1uF 10% 16V
C624	1-162-970-11	s	CERAMIC, CHIP 0.01uF 10% 25V
C625	1-107-826-11	s	CERAMIC, CHIP 0.1uF 10% 16V
C626	1-162-970-11	s	CERAMIC, CHIP 0.01uF 10% 25V
C627	1-162-928-11	s	CERAMIC, CHIP 120PF 5% 50V
C628	1-164-315-11	s	CERAMIC, CHIP 470PF 5% 50V
C629	1-162-969-11	s	CERAMIC, CHIP 0.0068uF 10% 25V
C630	1-162-970-11	s	CERAMIC, CHIP 0.01uF 10% 25V
C631	1-162-970-11	s	CERAMIC, CHIP 0.01uF 10% 25V
C632	1-162-927-11	s	CERAMIC, CHIP 100PF 5% 50V
C633	1-162-927-11	s	CERAMIC, CHIP 100PF 5% 50V
C634	1-162-927-11	s	CERAMIC, CHIP 100PF 5% 50V
C635-639	1-107-826-11	s	CERAMIC, CHIP 0.1uF 10% 16V
C640	1-162-970-11	s	CERAMIC, CHIP 0.01uF 10% 25V
C641	1-113-991-11	s	TANTALUM, CHIP 33uF 20% 16V
C642	1-113-991-11	s	TANTALUM, CHIP 33uF 20% 16V
C644	1-162-970-11	s	CERAMIC, CHIP 0.01uF 10% 25V
C645	1-162-970-11	s	CERAMIC, CHIP 0.01uF 10% 25V
C646	1-162-970-11	s	CERAMIC, CHIP 0.01uF 10% 25V
C647	1-162-970-11	s	CERAMIC, CHIP 0.01uF 10% 25V
C648	1-162-928-11	s	CERAMIC, CHIP 120PF 5% 50V
C649	1-164-315-11	s	CERAMIC, CHIP 470PF 5% 50V
C650	1-107-826-11	s	CERAMIC, CHIP 0.1uF 10% 16V
C652	1-164-227-11	s	CERAMIC, CHIP 0.022uF 10% 25V
C653	1-162-927-11	s	CERAMIC, CHIP 100PF 5% 50V
C654	1-162-964-11	s	CERAMIC, CHIP 0.001uF 10% 50V
C701	1-164-227-11	s	CERAMIC, CHIP 0.022uF 10% 25V
C702	1-164-227-11	s	CERAMIC, CHIP 0.022uF 10% 25V
C703	1-164-227-11	s	CERAMIC, CHIP 0.022uF 10% 25V
C704	1-104-911-11	s	TANTALUM, CHIP 33uF 20% 10V
C705	1-164-227-11	s	CERAMIC, CHIP 0.022uF 10% 25V
C706	1-164-227-11	s	CERAMIC, CHIP 0.022uF 10% 25V
C707	1-164-227-11	s	CERAMIC, CHIP 0.022uF 10% 25V
C710	1-162-970-11	s	CERAMIC, CHIP 0.01uF 10% 25V
C711	1-162-970-11	s	CERAMIC, CHIP 0.01uF 10% 25V
C725-732	1-162-970-11	s	CERAMIC, CHIP 0.01uF 10% 25V
C734	1-107-826-11	s	CERAMIC, CHIP 0.1uF 10% 16V
C735	1-107-826-11	s	CERAMIC, CHIP 0.1uF 10% 16V
C736-743	1-162-970-11	s	CERAMIC, CHIP 0.01uF 10% 25V
C744-754	1-107-826-11	s	CERAMIC, CHIP 0.1uF 10% 16V
C801	1-164-227-11	s	CERAMIC, CHIP 0.022uF 10% 25V
C802	1-164-227-11	s	CERAMIC, CHIP 0.022uF 10% 25V
C803	1-104-911-11	s	TANTALUM, CHIP 33uF 20% 10V
C804	1-164-227-11	s	CERAMIC, CHIP 0.022uF 10% 25V
C805	1-162-964-11	s	CERAMIC, CHIP 0.001uF 10% 50V
C806	1-162-957-11	s	CERAMIC, CHIP 220PF 5% 50V
C807	1-107-826-11	s	CERAMIC, CHIP 0.1uF 10% 16V
C808	1-104-852-11	s	TANTALUM, CHIP 22uF 20% 10V
C809	1-162-970-11	s	CERAMIC, CHIP 0.01uF 10% 25V
C810	1-104-852-11	s	TANTALUM, CHIP 22uF 20% 10V
C811	1-164-227-11	s	CERAMIC, CHIP 0.022uF 10% 25V
C812	1-113-991-11	s	TANTALUM, CHIP 33uF 20% 16V
C813	1-164-227-11	s	CERAMIC, CHIP 0.022uF 10% 25V
C814	1-164-227-11	s	CERAMIC, CHIP 0.022uF 10% 25V
C815	1-113-991-11	s	TANTALUM, CHIP 33uF 20% 16V
C816	1-107-826-11	s	CERAMIC, CHIP 0.1uF 10% 16V
C817-824	1-164-227-11	s	CERAMIC, CHIP 0.022uF 10% 25V
C825	1-104-851-11	s	TANTALUM, CHIP 10uF 20% 10V

(DVP-1 BOARD)

Ref. No. or Q'ty	Part No.	SP	Description
C826	1-104-851-11	s	TANTALUM, CHIP 10uF 20% 10V
C827-835	1-164-227-11	s	CERAMIC, CHIP 0.022uF 10% 25V
C836	1-107-826-11	s	CERAMIC, CHIP 0.1uF 10% 16V
C837	1-164-227-11	s	CERAMIC, CHIP 0.022uF 10% 25V
C838	1-164-227-11	s	CERAMIC, CHIP 0.022uF 10% 25V
C841	1-107-826-11	s	CERAMIC, CHIP 0.1uF 10% 16V
C901	1-162-915-11	s	CERAMIC, CHIP 10PF 50V
C902	1-162-915-11	s	CERAMIC, CHIP 10PF 50V
C903	1-162-915-11	s	CERAMIC, CHIP 10PF 50V
C904	1-162-915-11	s	CERAMIC, CHIP 10PF 50V
C905	1-107-826-11	s	CERAMIC, CHIP 0.1uF 10% 16V
C906	1-162-915-11	s	CERAMIC, CHIP 10PF 50V
C907	1-162-915-11	s	CERAMIC, CHIP 10PF 50V
C908	1-107-826-11	s	CERAMIC, CHIP 0.1uF 10% 16V
C909	1-107-826-11	s	CERAMIC, CHIP 0.1uF 10% 16V
C910	1-104-851-11	s	TANTALUM, CHIP 10uF 20% 10V
C911	1-107-826-11	s	CERAMIC, CHIP 0.1uF 10% 16V
C912	1-104-851-11	s	TANTALUM, CHIP 10uF 20% 10V
C913-918	1-107-826-11	s	CERAMIC, CHIP 0.1uF 10% 16V
C1000	1-162-970-11	s	CERAMIC, CHIP 0.01uF 10% 25V
C1001	1-113-991-11	s	TANTALUM, CHIP 33uF 20% 16V
C1002	1-107-823-11	s	CERAMIC 0.47uF 10% 16V
C1003	1-113-991-11	s	TANTALUM, CHIP 33uF 20% 16V
C1004	1-107-823-11	s	CERAMIC 0.47uF 10% 16V
C1005	1-113-991-11	s	TANTALUM, CHIP 33uF 20% 16V
C1006	1-113-991-11	s	TANTALUM, CHIP 33uF 20% 16V
C1007	1-107-823-11	s	CERAMIC 0.47uF 10% 16V
C1008	1-113-991-11	s	TANTALUM, CHIP 33uF 20% 16V
C1009	1-107-823-11	s	CERAMIC 0.47uF 10% 16V
C1010	1-113-991-11	s	TANTALUM, CHIP 33uF 20% 16V
C1011	1-107-823-11	s	CERAMIC 0.47uF 10% 16V
C1012	1-104-919-11	s	TANTALUM, CHIP 10uF 20% 25V
C1013	1-104-911-11	s	TANTALUM, CHIP 33uF 20% 10V
C1014	1-104-911-11	s	TANTALUM, CHIP 33uF 20% 10V
C1015	1-107-823-11	s	CERAMIC 0.47uF 10% 16V
C1016	1-104-919-11	s	TANTALUM, CHIP 10uF 20% 25V
C1017	1-104-911-11	s	TANTALUM, CHIP 33uF 20% 10V
C1018	1-107-823-11	s	CERAMIC 0.47uF 10% 16V
C1019	1-107-823-11	s	CERAMIC 0.47uF 10% 16V
C1020	1-104-919-11	s	TANTALUM, CHIP 10uF 20% 25V
C1021	1-104-911-11	s	TANTALUM, CHIP 33uF 20% 10V
C1022	1-107-823-11	s	CERAMIC 0.47uF 10% 16V
C1023	1-107-823-11	s	CERAMIC 0.47uF 10% 16V
C1024	1-107-823-11	s	CERAMIC 0.47uF 10% 16V
C1025	1-113-991-11	s	TANTALUM, CHIP 33uF 20% 16V
C1026	1-113-991-11	s	TANTALUM, CHIP 33uF 20% 16V
C1027	1-107-826-11	s	CERAMIC, CHIP 0.1uF 10% 16V
C1028	1-107-826-11	s	CERAMIC, CHIP 0.1uF 10% 16V
C1030	1-107-823-11	s	CERAMIC 0.47uF 10% 16V
C1031	1-107-823-11	s	CERAMIC 0.47uF 10% 16V
C1032	1-113-991-11	s	TANTALUM, CHIP 33uF 20% 16V
C1033	1-113-991-11	s	TANTALUM, CHIP 33uF 20% 16V
CN3	1-695-453-11	s	CONNECTOR, BOARD TO BOARD 50P
CN10	1-778-533-11	o	CONNECTOR, BOARD TO BOARD 140P
CN11	1-569-775-21	s	PIN, CONNECTOR (1.5MM)(SMD) 5P
CN12	1-580-789-21	s	PIN, CONNECTOR (1.5MM)(SMD) 6P
CN13	1-764-007-11	s	PIN, CONNECTOR (1.5MM)(SMD) 12P
CNI1	1-251-197-11	o	SOCKET, IC

(DVP-1 BOARD)

Ref. No. or Q'ty	Part No.	SP	Description
CNI16	1-540-197-11	o	SOCKET, IC 32P
CP801	1-760-346-21	s	VCO, CRYSTAL 24.576000MHz
D1	8-719-941-86	s	DIODE DAN202U
D2	8-719-026-34	s	LED CL-170UR-CD, RED
D3	8-719-026-34	s	LED CL-170UR-CD, RED
D10	8-719-941-86	s	DIODE DAN202U
D11	8-719-980-38	s	DIODE SB07-03C
D12	8-719-941-86	s	DIODE DAN202U
D13	8-719-941-09	s	DIODE DAP202U
D310	8-719-941-86	s	DIODE DAN202U
D701	8-719-941-23	s	DIODE DA204U
D702	8-719-941-23	s	DIODE DA204U
D703	8-719-941-23	s	DIODE DA204U
D704	8-719-941-23	s	DIODE DA204U
D901	8-719-938-72	s	DIODE SB01-05CP
DL301	1-411-946-11	s	DELAY LINE 64.3ns
DL401	1-411-946-11	s	DELAY LINE 64.3ns
DL501	1-411-946-11	s	DELAY LINE 64.3ns
DL601	1-411-946-11	s	DELAY LINE 64.3ns
F101 ⚠	1-576-122-21	s	LINK, IC
FB801	1-543-309-21	s	BEAD, FERRITE
FL301	1-233-743-11	s	FILTER, LOW-PASS
FL401	1-233-743-11	s	FILTER, LOW-PASS
FL501	1-233-743-11	s	FILTER, LOW-PASS
FL601	1-233-743-11	s	FILTER, LOW-PASS
IC2	8-759-257-96	s	IC TC7S14FU(TE85R)
IC3	8-759-257-96	s	IC TC7S14FU(TE85R)
IC4	8-759-503-60	s	IC S-80740AN-D4-S
IC5	8-759-271-84	s	IC TC7SH02FU
IC6	8-759-079-46	s	IC TC74VHC00FS(EL)
IC7	8-759-079-70	s	IC TC74VHC138FS(EL)
IC8	8-759-079-70	s	IC TC74VHC138FS(EL)
IC9	8-759-079-70	s	IC TC74VHC138FS(EL)
IC10	8-759-079-70	s	IC TC74VHC138FS(EL)
IC11	8-759-050-53	s	IC SN74HCT08APW-E20
IC12	8-759-079-67	s	IC TC74VHC125FS(EL)
IC13	8-759-079-67	s	IC TC74VHC125FS(EL)
IC14	8-759-079-67	s	IC TC74VHC125FS(EL)
IC15	8-759-066-61	s	IC TC4053BFS
IC17	8-759-374-77	s	IC LC35256AM-10-TLM
IC18	8-759-348-79	s	IC TE7751
IC19	8-759-079-60	s	IC TC74VHC32FS(EL)
IC20	8-759-399-51	s	IC 74LVX4245QSCX
IC21	8-759-080-02	s	IC TC74VHC541FS(EL)
IC22	8-759-196-96	s	IC TC7SH08FU-TE85R
IC23	8-759-058-58	s	IC TC7S04FU(TE85R)
IC24	8-759-175-72	s	IC UPD72002GB-11-3B4
IC25	8-759-050-53	s	IC SN74HCT08APW-E20
IC26	8-759-196-96	s	IC TC7SH08FU-TE85R
IC27	8-759-196-96	s	IC TC7SH08FU-TE85R
IC28	8-759-196-97	s	IC TC7SH32FU-TE85R
IC29	8-759-058-58	s	IC TC7S04FU(TE85R)
IC30	8-759-058-58	s	IC TC7S04FU(TE85R)
IC103	8-759-196-97	s	IC TC7SH32FU-TE85R
IC200	8-759-075-68	s	IC TC4066BFS

http://getMANUAL.com

(DVP-1 BOARD)

Ref. No. or Q'ty	Part No.	SP	Description
IC201	8-759-635-27	s	IC M62352GP
IC202	8-759-635-27	s	IC M62352GP
IC210	8-759-079-60	s	IC TC74VHC32FS(EL)
IC211	8-759-079-67	s	IC TC74VHC125FS(EL)
IC212	8-752-075-37	s	IC CXA3054R
IC214	8-759-079-60	s	IC TC74VHC32FS(EL)
IC300	8-759-075-68	s	IC TC4066BFS
IC301	8-759-079-52	s	IC TC74VHC08FS(EL)
IC302	8-752-075-38	s	IC CXA3053R
IC303	8-759-359-66	s	IC TL082CPW-E05
IC304	8-759-196-96	s	IC TC7SH08FU-TE85R
IC305	8-752-075-40	s	IC CXA3051R
IC306	8-759-337-40	s	IC NJM2904V(TE2)
IC400	8-759-075-68	s	IC TC4066BFS
IC402	8-752-075-38	s	IC CXA3053R
IC403	8-759-359-66	s	IC TL082CPW-E05
IC404	8-759-196-96	s	IC TC7SH08FU-TE85R
IC405	8-752-075-40	s	IC CXA3051R
IC500	8-759-075-68	s	IC TC4066BFS
IC502	8-752-075-38	s	IC CXA3053R
IC503	8-759-359-66	s	IC TL082CPW-E05
IC504	8-759-196-96	s	IC TC7SH08FU-TE85R
IC505	8-752-075-40	s	IC CXA3051R
IC600	8-759-075-68	s	IC TC4066BFS
IC602	8-752-075-38	s	IC CXA3053R
IC603	8-759-359-66	s	IC TL082CPW-E05
IC604	8-759-196-96	s	IC TC7SH08FU-TE85R
IC605	8-752-075-40	s	IC CXA3051R
IC700	8-759-075-68	s	IC TC4066BFS
IC701	8-759-390-95	s	IC CXD8944Q
IC702	8-759-080-06	s	IC TC74VHC574FS(EL)
IC703	8-759-080-06	s	IC TC74VHC574FS(EL)
IC704	8-759-079-87	s	IC TC74VHC245FS(EL)
IC705	8-759-271-86	s	IC TC7SH04FU
IC706	8-759-079-87	s	IC TC74VHC245FS(EL)
IC707	8-759-359-66	s	IC TL082CPW-E05
IC708	8-759-359-66	s	IC TL082CPW-E05
IC709	8-759-359-66	s	IC TL082CPW-E05
IC710	8-759-359-66	s	IC TL082CPW-E05
IC711	8-759-080-06	s	IC TC74VHC574FS(EL)
IC801	8-759-295-09	s	IC TLC2932IPW
IC802	8-759-260-55	s	IC TLC272CPW-E05
IC803	8-759-080-02	s	IC TC74VHC541FS(EL)
IC804	8-759-079-49	s	IC TC74VHC04FS(EL)
IC805	8-759-175-65	s	IC CXD8821Q
IC806	8-759-079-87	s	IC TC74VHC245FS(EL)
IC807	8-759-079-87	s	IC TC74VHC245FS(EL)
IC808	8-759-079-87	s	IC TC74VHC245FS(EL)
IC810	8-759-079-61	s	IC TC74VHC74FS(EL)
IC811	8-759-079-61	s	IC TC74VHC74FS(EL)
IC812	8-759-186-53	s	IC TC74VHC163F
IC813	8-759-079-49	s	IC TC74VHC04FS(EL)
IC814	8-759-186-54	s	IC TC74VHC164F
IC815	8-759-196-96	s	IC TC7SH08FU-TE85R
IC816	8-759-079-61	s	IC TC74VHC74FS(EL)
IC817	8-759-079-61	s	IC TC74VHC74FS(EL)
IC818	8-759-196-96	s	IC TC7SH08FU-TE85R
IC901	8-759-196-96	s	IC TC7SH08FU-TE85R
IC902	8-759-196-96	s	IC TC7SH08FU-TE85R

(DVP-1 BOARD)

Ref. No. or Q'ty	Part No.	SP	Description
IC903	8-759-079-74	s	IC TC74VHC157FS(EL)
IC904	8-759-079-87	s	IC TC74VHC245FS(EL)
IC905	8-752-378-49	s	IC CXD206-123R
IC906	8-759-167-20	s	IC UPD42280GU-30
IC1001	8-759-079-52	s	IC TC74VHC08FS(EL)
IC1002	8-729-025-54	s	TRANSISTOR SI9958DY
IC1003	8-729-025-54	s	TRANSISTOR SI9958DY
IC1004	8-729-021-17	s	TRANSISTOR SI9947DY-T1
IC1005	8-729-021-17	s	TRANSISTOR SI9947DY-T1
IC1006	8-729-021-17	s	TRANSISTOR SI9947DY-T1
IC1007	8-729-025-54	s	TRANSISTOR SI9958DY
IC1008	8-759-080-00	s	IC TC74VHC540FS(EL)
IC1009	8-759-079-60	s	IC TC74VHC32FS(EL)
IC1030	8-729-025-54	s	TRANSISTOR SI9958DY
L1	1-424-673-11	s	COIL, CHOKE 4.7uH
L2	1-424-673-11	s	COIL, CHOKE 4.7uH
L3	1-410-737-31	s	INDUCTOR, CHIP 0.47uH
L4	1-410-737-31	s	INDUCTOR, CHIP 0.47uH
L5	1-410-737-31	s	INDUCTOR, CHIP 0.47uH
L10	1-410-737-31	s	INDUCTOR, CHIP 0.47uH
L201-205	1-410-737-31	s	INDUCTOR, CHIP 0.47uH
L207	1-410-393-11	s	INDUCTOR, CHIP 100uH
L210	1-410-803-11	s	INDUCTOR, CHIP 47nH
L213	1-410-737-31	s	INDUCTOR, CHIP 0.47uH
L301	1-410-737-31	s	INDUCTOR, CHIP 0.47uH
L302	1-410-737-31	s	INDUCTOR, CHIP 0.47uH
L303	1-410-737-31	s	INDUCTOR, CHIP 0.47uH
L401	1-410-737-31	s	INDUCTOR, CHIP 0.47uH
L402	1-410-737-31	s	INDUCTOR, CHIP 0.47uH
L403	1-410-737-31	s	INDUCTOR, CHIP 0.47uH
L501	1-410-737-31	s	INDUCTOR, CHIP 0.47uH
L502	1-410-737-31	s	INDUCTOR, CHIP 0.47uH
L503	1-410-737-31	s	INDUCTOR, CHIP 0.47uH
L601	1-410-737-31	s	INDUCTOR, CHIP 0.47uH
L602	1-410-737-31	s	INDUCTOR, CHIP 0.47uH
L603	1-410-737-31	s	INDUCTOR, CHIP 0.47uH
L701	1-424-673-11	s	COIL, CHOKE 4.7uH
L801	1-410-393-11	s	INDUCTOR, CHIP 100uH
L802	1-410-803-11	s	INDUCTOR, CHIP 47nH
L803	1-410-803-11	s	INDUCTOR, CHIP 47nH
L901	1-410-803-11	s	INDUCTOR, CHIP 47nH
L1001	1-424-673-11	s	COIL, CHOKE 4.7uH
L1002	1-424-673-11	s	COIL, CHOKE 4.7uH
L1003	1-410-737-31	s	INDUCTOR, CHIP 0.47uH
L1004	1-424-673-11	s	COIL, CHOKE 4.7uH
L1005	1-410-737-31	s	INDUCTOR, CHIP 0.47uH
L1006	1-410-737-31	s	INDUCTOR, CHIP 0.47uH
L1007	1-410-737-31	s	INDUCTOR, CHIP 0.47uH
Q10	8-729-140-63	s	TRANSISTOR 2SA1611-M5M6
Q11	8-729-140-63	s	TRANSISTOR 2SA1611-M5M6
Q12	8-729-029-14	s	TRANSISTOR DTC144EUA-T106
Q13	8-729-029-14	s	TRANSISTOR DTC144EUA-T106
Q14	8-729-101-07	s	TRANSISTOR 2SB798
Q15	8-729-101-07	s	TRANSISTOR 2SB798
Q16	8-729-029-14	s	TRANSISTOR DTC144EUA-T106
Q201	8-729-143-13	s	TRANSISTOR 2SC4176-B34
Q202	8-729-143-13	s	TRANSISTOR 2SC4176-B34
Q260	8-729-143-13	s	TRANSISTOR 2SC4176-B34

(DVP-1 BOARD)

Ref. No. or Q'ty	Part No.	SP	Description
Q261	8-729-143-13	s	TRANSISTOR 2SC4176-B34
Q262	8-729-143-13	s	TRANSISTOR 2SC4176-B34
Q263	8-729-143-13	s	TRANSISTOR 2SC4176-B34
Q301	8-729-143-13	s	TRANSISTOR 2SC4176-B34
Q302	8-729-143-13	s	TRANSISTOR 2SC4176-B34
Q303	8-729-209-07	s	TRANSISTOR 2SC4213-B
Q304	8-729-209-07	s	TRANSISTOR 2SC4213-B
Q305	8-729-143-13	s	TRANSISTOR 2SC4176-B34
Q306	8-729-143-13	s	TRANSISTOR 2SC4176-B34
Q307	8-729-143-13	s	TRANSISTOR 2SC4176-B34
Q308	8-729-143-13	s	TRANSISTOR 2SC4176-B34
Q310	8-729-143-13	s	TRANSISTOR 2SC4176-B34
Q401	8-729-143-13	s	TRANSISTOR 2SC4176-B34
Q402	8-729-143-13	s	TRANSISTOR 2SC4176-B34
Q403	8-729-209-07	s	TRANSISTOR 2SC4213-B
Q404	8-729-209-07	s	TRANSISTOR 2SC4213-B
Q405	8-729-143-13	s	TRANSISTOR 2SC4176-B34
Q406	8-729-143-13	s	TRANSISTOR 2SC4176-B34
Q407	8-729-143-13	s	TRANSISTOR 2SC4176-B34
Q408	8-729-143-13	s	TRANSISTOR 2SC4176-B34
Q501	8-729-143-13	s	TRANSISTOR 2SC4176-B34
Q502	8-729-143-13	s	TRANSISTOR 2SC4176-B34
Q503	8-729-209-07	s	TRANSISTOR 2SC4213-B
Q504	8-729-209-07	s	TRANSISTOR 2SC4213-B
Q505	8-729-143-13	s	TRANSISTOR 2SC4176-B34
Q506	8-729-143-13	s	TRANSISTOR 2SC4176-B34
Q507	8-729-143-13	s	TRANSISTOR 2SC4176-B34
Q508	8-729-143-13	s	TRANSISTOR 2SC4176-B34
Q601	8-729-143-13	s	TRANSISTOR 2SC4176-B34
Q602	8-729-143-13	s	TRANSISTOR 2SC4176-B34
Q603	8-729-209-07	s	TRANSISTOR 2SC4213-B
Q604	8-729-209-07	s	TRANSISTOR 2SC4213-B
Q605	8-729-143-13	s	TRANSISTOR 2SC4176-B34
Q606	8-729-143-13	s	TRANSISTOR 2SC4176-B34
Q607	8-729-143-13	s	TRANSISTOR 2SC4176-B34
Q608	8-729-143-13	s	TRANSISTOR 2SC4176-B34
Q1001	8-729-028-91	s	TRANSISTOR DTA144EUA-T106
Q1002	8-729-029-14	s	TRANSISTOR DTC144EUA-T106
Q1003	8-729-028-91	s	TRANSISTOR DTA144EUA-T106
Q1004	8-729-029-14	s	TRANSISTOR DTC144EUA-T106
Q1006	8-729-029-14	s	TRANSISTOR DTC144EUA-T106
Q1007	8-729-029-14	s	TRANSISTOR DTC144EUA-T106
Q1008	8-729-028-91	s	TRANSISTOR DTA144EUA-T106
Q1009	8-729-028-91	s	TRANSISTOR DTA144EUA-T106
Q1010	8-729-028-91	s	TRANSISTOR DTA144EUA-T106
Q1011	8-729-029-14	s	TRANSISTOR DTC144EUA-T106
Q1012	8-729-028-91	s	TRANSISTOR DTA144EUA-T106
Q1013	8-729-028-91	s	TRANSISTOR DTA144EUA-T106
Q1014	8-729-028-91	s	TRANSISTOR DTA144EUA-T106
Q1015	8-729-028-91	s	TRANSISTOR DTA144EUA-T106
Q1016	8-729-029-14	s	TRANSISTOR DTC144EUA-T106
Q1030	8-729-028-91	s	TRANSISTOR DTA144EUA-T106
Q1031	8-729-029-14	s	TRANSISTOR DTC144EUA-T106
R2	1-216-864-11	s	METAL, CHIP 0 5% 1/16W
R3	1-218-748-11	s	METAL, CHIP 220K 0.50% 1/16W
R4	1-218-748-11	s	METAL, CHIP 220K 0.50% 1/16W
R5	1-216-864-11	s	METAL, CHIP 0 5% 1/16W
R7	1-218-748-11	s	METAL, CHIP 220K 0.50% 1/16W

(DVP-1 BOARD)

Ref. No. or Q'ty	Part No.	SP	Description
R8	1-216-864-11	s	METAL, CHIP 0 5% 1/16W
R10	1-216-864-11	s	METAL, CHIP 0 5% 1/16W
R11	1-216-864-11	s	METAL, CHIP 0 5% 1/16W
R13	1-216-864-11	s	METAL, CHIP 0 5% 1/16W
R14	1-218-740-11	s	METAL, CHIP 100K 0.50% 1/16W
R15	1-216-864-11	s	METAL, CHIP 0 5% 1/16W
R16	1-218-748-11	s	METAL, CHIP 220K 0.50% 1/16W
R17	1-218-748-11	s	METAL, CHIP 220K 0.50% 1/16W
R18	1-218-692-11	s	METAL, CHIP 1K 0.50% 1/16W
R19	1-218-748-11	s	METAL, CHIP 220K 0.50% 1/16W
R20	1-218-748-11	s	METAL, CHIP 220K 0.50% 1/16W
R21	1-218-748-11	s	METAL, CHIP 220K 0.50% 1/16W
R22	1-218-732-11	s	METAL, CHIP 47K 0.50% 1/16W
R23	1-218-748-11	s	METAL, CHIP 220K 0.50% 1/16W
R24	1-218-748-11	s	METAL, CHIP 220K 0.50% 1/16W
R25	1-218-692-11	s	METAL, CHIP 1K 0.50% 1/16W
R26	1-218-692-11	s	METAL, CHIP 1K 0.50% 1/16W
R27-32	1-218-748-11	s	METAL, CHIP 220K 0.50% 1/16W
R33	1-218-692-11	s	METAL, CHIP 1K 0.50% 1/16W
R34	1-218-692-11	s	METAL, CHIP 1K 0.50% 1/16W
R35	1-218-748-11	s	METAL, CHIP 220K 0.50% 1/16W
R36	1-218-748-11	s	METAL, CHIP 220K 0.50% 1/16W
R37	1-218-748-11	s	METAL, CHIP 220K 0.50% 1/16W
R38	1-216-857-11	s	METAL, CHIP 1M 5% 1/16W
R39-44	1-218-748-11	s	METAL, CHIP 220K 0.50% 1/16W
R45	1-218-692-11	s	METAL, CHIP 1K 0.50% 1/16W
R46	1-218-692-11	s	METAL, CHIP 1K 0.50% 1/16W
R47	1-218-692-11	s	METAL, CHIP 1K 0.50% 1/16W
R48	1-218-692-11	s	METAL, CHIP 1K 0.50% 1/16W
R49	1-218-676-11	s	METAL, CHIP 220 0.50% 1/16W
R50	1-218-748-11	s	METAL, CHIP 220K 0.50% 1/16W
R51	1-218-748-11	s	METAL, CHIP 220K 0.50% 1/16W
R52	1-218-748-11	s	METAL, CHIP 220K 0.50% 1/16W
R53	1-218-748-11	s	METAL, CHIP 220K 0.50% 1/16W
R54	1-218-692-11	s	METAL, CHIP 1K 0.50% 1/16W
R55	1-218-692-11	s	METAL, CHIP 1K 0.50% 1/16W
R56	1-218-692-11	s	METAL, CHIP 1K 0.50% 1/16W
R57	1-218-692-11	s	METAL, CHIP 1K 0.50% 1/16W
R58	1-218-732-11	s	METAL, CHIP 47K 0.50% 1/16W
R59	1-218-748-11	s	METAL, CHIP 220K 0.50% 1/16W
R60	1-218-732-11	s	METAL, CHIP 47K 0.50% 1/16W
R61	1-218-748-11	s	METAL, CHIP 220K 0.50% 1/16W
R62	1-218-732-11	s	METAL, CHIP 47K 0.50% 1/16W
R63	1-218-748-11	s	METAL, CHIP 220K 0.50% 1/16W
R64	1-218-732-11	s	METAL, CHIP 47K 0.50% 1/16W
R65	1-218-748-11	s	METAL, CHIP 220K 0.50% 1/16W
R66	1-218-732-11	s	METAL, CHIP 47K 0.50% 1/16W
R67	1-218-748-11	s	METAL, CHIP 220K 0.50% 1/16W
R68	1-218-732-11	s	METAL, CHIP 47K 0.50% 1/16W
R69	1-218-748-11	s	METAL, CHIP 220K 0.50% 1/16W
R70	1-218-748-11	s	METAL, CHIP 220K 0.50% 1/16W
R71	1-218-732-11	s	METAL, CHIP 47K 0.50% 1/16W
R72	1-218-748-11	s	METAL, CHIP 220K 0.50% 1/16W
R73	1-218-732-11	s	METAL, CHIP 47K 0.50% 1/16W
R74	1-218-748-11	s	METAL, CHIP 220K 0.50% 1/16W
R75-86	1-218-692-11	s	METAL, CHIP 1K 0.50% 1/16W
R88	1-218-700-11	s	METAL, CHIP 2.2K 0.50% 1/16W
R89	1-218-740-11	s	METAL, CHIP 100K 0.50% 1/16W
R90	1-218-692-11	s	METAL, CHIP 1K 0.50% 1/16W

(DVP-1 BOARD)

Ref. No. or Q'ty	Part No.	SP	Description
R91	1-218-748-11	s	METAL, CHIP 220K 0.50% 1/16W
R92	1-218-748-11	s	METAL, CHIP 220K 0.50% 1/16W
R93	1-218-748-11	s	METAL, CHIP 220K 0.50% 1/16W
R94	1-218-748-11	s	METAL, CHIP 220K 0.50% 1/16W
R95-100	1-218-668-11	s	METAL, CHIP 100 0.50% 1/16W
R101	1-218-748-11	s	METAL, CHIP 220K 0.50% 1/16W
R102	1-218-748-11	s	METAL, CHIP 220K 0.50% 1/16W
R103	1-218-668-11	s	METAL, CHIP 100 0.50% 1/16W
R104	1-218-668-11	s	METAL, CHIP 100 0.50% 1/16W
R105	1-218-668-11	s	METAL, CHIP 100 0.50% 1/16W
R106-110	1-218-748-11	s	METAL, CHIP 220K 0.50% 1/16W
R111-116	1-218-668-11	s	METAL, CHIP 100 0.50% 1/16W
R117	1-218-748-11	s	METAL, CHIP 220K 0.50% 1/16W
R118	1-218-748-11	s	METAL, CHIP 220K 0.50% 1/16W
R119	1-218-748-11	s	METAL, CHIP 220K 0.50% 1/16W
R120	1-218-644-11	s	METAL, CHIP 10 0.50% 1/16W
R121	1-218-644-11	s	METAL, CHIP 10 0.50% 1/16W
R122	1-218-644-11	s	METAL, CHIP 10 0.50% 1/16W
R123	1-218-692-11	s	METAL, CHIP 1K 0.50% 1/16W
R124	1-216-864-11	s	METAL, CHIP 0 5% 1/16W
R125	1-218-748-11	s	METAL, CHIP 220K 0.50% 1/16W
R126	1-218-748-11	s	METAL, CHIP 220K 0.50% 1/16W
R127	1-218-740-11	s	METAL, CHIP 100K 0.50% 1/16W
R128	1-216-857-11	s	METAL, CHIP 1M 5% 1/16W
R129	1-218-692-11	s	METAL, CHIP 1K 0.50% 1/16W
R130	1-218-748-11	s	METAL, CHIP 220K 0.50% 1/16W
R131	1-218-748-11	s	METAL, CHIP 220K 0.50% 1/16W
R133	1-218-692-11	s	METAL, CHIP 1K 0.50% 1/16W
R134	1-218-748-11	s	METAL, CHIP 220K 0.50% 1/16W
R135	1-218-748-11	s	METAL, CHIP 220K 0.50% 1/16W
R136	1-218-748-11	s	METAL, CHIP 220K 0.50% 1/16W
R137	1-218-748-11	s	METAL, CHIP 220K 0.50% 1/16W
R138	1-218-652-11	s	METAL, CHIP 22 0.50% 1/16W
R139	1-218-692-11	s	METAL, CHIP 1K 0.50% 1/16W
R140	1-218-692-11	s	METAL, CHIP 1K 0.50% 1/16W
R141	1-218-692-11	s	METAL, CHIP 1K 0.50% 1/16W
R142	1-218-692-11	s	METAL, CHIP 1K 0.50% 1/16W
R144	1-218-692-11	s	METAL, CHIP 1K 0.50% 1/16W
R145	1-218-692-11	s	METAL, CHIP 1K 0.50% 1/16W
R146	1-218-692-11	s	METAL, CHIP 1K 0.50% 1/16W
R147	1-218-748-11	s	METAL, CHIP 220K 0.50% 1/16W
R148	1-218-748-11	s	METAL, CHIP 220K 0.50% 1/16W
R150-156	1-218-692-11	s	METAL, CHIP 1K 0.50% 1/16W
R157	1-218-668-11	s	METAL, CHIP 100 0.50% 1/16W
R158-163	1-218-692-11	s	METAL, CHIP 1K 0.50% 1/16W
R164	1-216-857-11	s	METAL, CHIP 1M 5% 1/16W
R165	1-218-748-11	s	METAL, CHIP 220K 0.50% 1/16W
R166	1-218-692-11	s	METAL, CHIP 1K 0.50% 1/16W
R167	1-218-748-11	s	METAL, CHIP 220K 0.50% 1/16W
R170	1-216-864-11	s	METAL, CHIP 0 5% 1/16W
R173	1-218-732-11	s	METAL, CHIP 47K 0.50% 1/16W
R174	1-218-732-11	s	METAL, CHIP 47K 0.50% 1/16W
R175	1-216-864-11	s	METAL, CHIP 0 5% 1/16W
R179	1-216-864-11	s	METAL, CHIP 0 5% 1/16W
R180	1-216-864-11	s	METAL, CHIP 0 5% 1/16W
R184	1-218-692-11	s	METAL, CHIP 1K 0.50% 1/16W
R185	1-218-692-11	s	METAL, CHIP 1K 0.50% 1/16W
R187	1-218-748-11	s	METAL, CHIP 220K 0.50% 1/16W
R188	1-218-748-11	s	METAL, CHIP 220K 0.50% 1/16W

(DVP-1 BOARD)

Ref. No. or Q'ty	Part No.	SP	Description
R189	1-218-748-11	s	METAL, CHIP 220K 0.50% 1/16W
R190	1-218-748-11	s	METAL, CHIP 220K 0.50% 1/16W
R193	1-216-864-11	s	METAL, CHIP 0 5% 1/16W
R194	1-218-740-11	s	METAL, CHIP 100K 0.50% 1/16W
R195	1-218-748-11	s	METAL, CHIP 220K 0.50% 1/16W
R196	1-218-740-11	s	METAL, CHIP 100K 0.50% 1/16W
R197	1-218-692-11	s	METAL, CHIP 1K 0.50% 1/16W
R198	1-218-748-11	s	METAL, CHIP 220K 0.50% 1/16W
R199	1-218-740-11	s	METAL, CHIP 100K 0.50% 1/16W
R200	1-218-740-11	s	METAL, CHIP 100K 0.50% 1/16W
R201	1-218-660-11	s	METAL, CHIP 47 0.50% 1/16W
R202	1-218-740-11	s	METAL, CHIP 100K 0.50% 1/16W
R203	1-218-716-11	s	METAL, CHIP 10K 0.50% 1/16W
R204	1-218-716-11	s	METAL, CHIP 10K 0.50% 1/16W
R206	1-218-668-11	s	METAL, CHIP 100 0.50% 1/16W
R207	1-218-668-11	s	METAL, CHIP 100 0.50% 1/16W
R208	1-218-660-11	s	METAL, CHIP 47 0.50% 1/16W
R209	1-218-716-11	s	METAL, CHIP 10K 0.50% 1/16W
R210	1-218-660-11	s	METAL, CHIP 47 0.50% 1/16W
R211	1-218-716-11	s	METAL, CHIP 10K 0.50% 1/16W
R212	1-218-708-11	s	METAL, CHIP 4.7K 0.50% 1/16W
R213	1-218-716-11	s	METAL, CHIP 10K 0.50% 1/16W
R214	1-218-716-11	s	METAL, CHIP 10K 0.50% 1/16W
R215	1-218-708-11	s	METAL, CHIP 4.7K 0.50% 1/16W
R216	1-218-660-11	s	METAL, CHIP 47 0.50% 1/16W
R217	1-218-716-11	s	METAL, CHIP 10K 0.50% 1/16W
R218	1-218-660-11	s	METAL, CHIP 47 0.50% 1/16W
R219	1-218-716-11	s	METAL, CHIP 10K 0.50% 1/16W
R220	1-218-720-11	s	METAL, CHIP 15K 0.50% 1/16W
R221	1-218-720-11	s	METAL, CHIP 15K 0.50% 1/16W
R222	1-218-720-11	s	METAL, CHIP 15K 0.50% 1/16W
R223	1-218-720-11	s	METAL, CHIP 15K 0.50% 1/16W
R224	1-218-668-11	s	METAL, CHIP 100 0.50% 1/16W
R225	1-218-668-11	s	METAL, CHIP 100 0.50% 1/16W
R226	1-218-716-11	s	METAL, CHIP 10K 0.50% 1/16W
R227	1-218-716-11	s	METAL, CHIP 10K 0.50% 1/16W
R228	1-218-668-11	s	METAL, CHIP 100 0.50% 1/16W
R229	1-218-708-11	s	METAL, CHIP 4.7K 0.50% 1/16W
R230	1-218-708-11	s	METAL, CHIP 4.7K 0.50% 1/16W
R231	1-218-708-11	s	METAL, CHIP 4.7K 0.50% 1/16W
R232	1-216-864-11	s	METAL, CHIP 0 5% 1/16W
R233	1-218-724-11	s	METAL, CHIP 22K 0.50% 1/16W
R234	1-218-724-11	s	METAL, CHIP 22K 0.50% 1/16W
R235	1-218-700-11	s	METAL, CHIP 2.2K 0.50% 1/16W
R237	1-216-864-11	s	METAL, CHIP 0 5% 1/16W
R239	1-218-708-11	s	METAL, CHIP 4.7K 0.50% 1/16W
R240	1-218-740-11	s	METAL, CHIP 100K 0.50% 1/16W
R241	1-218-740-11	s	METAL, CHIP 100K 0.50% 1/16W
R242	1-218-668-11	s	METAL, CHIP 100 0.50% 1/16W
R243	1-218-740-11	s	METAL, CHIP 100K 0.50% 1/16W
R244	1-218-661-11	s	METAL, CHIP 51 0.50% 1/16W
R245	1-218-716-11	s	METAL, CHIP 10K 0.50% 1/16W
R246	1-218-716-11	s	METAL, CHIP 10K 0.50% 1/16W
R247	1-218-661-11	s	METAL, CHIP 51 0.50% 1/16W
R248	1-218-661-11	s	METAL, CHIP 51 0.50% 1/16W
R249	1-218-661-11	s	METAL, CHIP 51 0.50% 1/16W
R250	1-218-668-11	s	METAL, CHIP 100 0.50% 1/16W
R253	1-218-701-11	s	METAL, CHIP 2.4K 0.50% 1/16W
R254	1-218-692-11	s	METAL, CHIP 1K 0.50% 1/16W

(DVP-1 BOARD)

Ref. No. or Q'ty	Part No.	SP	Description
R255	1-218-714-11	s	METAL, CHIP 8.2K 0.50% 1/16W
R256	1-218-700-11	s	METAL, CHIP 2.2K 0.50% 1/16W
R257	1-218-644-11	s	METAL, CHIP 10 0.50% 1/16W
R258	1-218-648-11	s	METAL, CHIP 15 0.50% 1/16W
R259	1-218-684-11	s	METAL, CHIP 470 0.50% 1/16W
R260	1-218-661-11	s	METAL, CHIP 51 0.50% 1/16W
R261	1-218-661-11	s	METAL, CHIP 51 0.50% 1/16W
R262	1-218-661-11	s	METAL, CHIP 51 0.50% 1/16W
R263	1-218-661-11	s	METAL, CHIP 51 0.50% 1/16W
R264	1-218-668-11	s	METAL, CHIP 100 0.50% 1/16W
R265	1-218-700-11	s	METAL, CHIP 2.2K 0.50% 1/16W
R266	1-218-668-11	s	METAL, CHIP 100 0.50% 1/16W
R267	1-218-698-11	s	METAL, CHIP 1.8K 0.50% 1/16W
R268	1-218-700-11	s	METAL, CHIP 2.2K 0.50% 1/16W
R269	1-218-680-11	s	METAL, CHIP 330 0.50% 1/16W
R270	1-218-676-11	s	METAL, CHIP 220 0.50% 1/16W
R271	1-218-660-11	s	METAL, CHIP 47 0.50% 1/16W
R272	1-218-708-11	s	METAL, CHIP 4.7K 0.50% 1/16W
R273	1-218-708-11	s	METAL, CHIP 4.7K 0.50% 1/16W
R274	1-218-714-11	s	METAL, CHIP 8.2K 0.50% 1/16W
R275	1-218-716-11	s	METAL, CHIP 10K 0.50% 1/16W
R276	1-218-708-11	s	METAL, CHIP 4.7K 0.50% 1/16W
R277	1-218-676-11	s	METAL, CHIP 220 0.50% 1/16W
R278	1-218-692-11	s	METAL, CHIP 1K 0.50% 1/16W
R279	1-218-740-11	s	METAL, CHIP 100K 0.50% 1/16W
R280	1-218-692-11	s	METAL, CHIP 1K 0.50% 1/16W
R281	1-218-692-11	s	METAL, CHIP 1K 0.50% 1/16W
R300	1-218-740-11	s	METAL, CHIP 100K 0.50% 1/16W
R301	1-218-716-11	s	METAL, CHIP 10K 0.50% 1/16W
R302	1-218-716-11	s	METAL, CHIP 10K 0.50% 1/16W
R303	1-218-716-11	s	METAL, CHIP 10K 0.50% 1/16W
R304	1-218-692-11	s	METAL, CHIP 1K 0.50% 1/16W
R305	1-218-716-11	s	METAL, CHIP 10K 0.50% 1/16W
R306	1-218-716-11	s	METAL, CHIP 10K 0.50% 1/16W
R307	1-218-668-11	s	METAL, CHIP 100 0.50% 1/16W
R308	1-218-716-11	s	METAL, CHIP 10K 0.50% 1/16W
R309	1-218-716-11	s	METAL, CHIP 10K 0.50% 1/16W
R310	1-218-644-11	s	METAL, CHIP 10 0.50% 1/16W
R311	1-218-644-11	s	METAL, CHIP 10 0.50% 1/16W
R312	1-218-716-11	s	METAL, CHIP 10K 0.50% 1/16W
R313	1-218-668-11	s	METAL, CHIP 100 0.50% 1/16W
R314	1-218-696-11	s	METAL, CHIP 1.5K 0.50% 1/16W
R315	1-218-660-11	s	METAL, CHIP 47 0.50% 1/16W
R316	1-218-692-11	s	METAL, CHIP 1K 0.50% 1/16W
R317	1-218-684-11	s	METAL, CHIP 470 0.50% 1/16W
R318	1-218-689-11	s	METAL, CHIP 750 0.50% 1/16W
R319	1-218-684-11	s	METAL, CHIP 470 0.50% 1/16W
R320	1-218-668-11	s	METAL, CHIP 100 0.50% 1/16W
R321	1-218-660-11	s	METAL, CHIP 47 0.50% 1/16W
R322	1-218-692-11	s	METAL, CHIP 1K 0.50% 1/16W
R323	1-218-664-11	s	METAL, CHIP 68 0.50% 1/16W
R324	1-218-689-11	s	METAL, CHIP 750 0.50% 1/16W
R325	1-218-660-11	s	METAL, CHIP 47 0.50% 1/16W
R326	1-218-692-11	s	METAL, CHIP 1K 0.50% 1/16W
R327	1-218-665-11	s	METAL, CHIP 75 0.50% 1/16W
R328	1-218-689-11	s	METAL, CHIP 750 0.50% 1/16W
R329	1-218-720-11	s	METAL, CHIP 15K 0.50% 1/16W
R330	1-218-716-11	s	METAL, CHIP 10K 0.50% 1/16W
R331	1-218-716-11	s	METAL, CHIP 10K 0.50% 1/16W

(DVP-1 BOARD)

Ref. No. or Q'ty	Part No.	SP	Description
R332	1-218-700-11	s	METAL, CHIP 2.2K 0.50% 1/16W
R333	1-218-706-11	s	METAL, CHIP 3.9K 0.50% 1/16W
R334	1-218-724-11	s	METAL, CHIP 22K 0.50% 1/16W
R335	1-218-722-11	s	METAL, CHIP 18K 0.50% 1/16W
R336	1-218-726-11	s	METAL, CHIP 27K 0.50% 1/16W
R337	1-216-864-11	s	METAL, CHIP 0 5% 1/16W
R338	1-218-740-11	s	METAL, CHIP 100K 0.50% 1/16W
R339	1-218-696-11	s	METAL, CHIP 1.5K 0.50% 1/16W
R340	1-218-716-11	s	METAL, CHIP 10K 0.50% 1/16W
R341	1-218-710-11	s	METAL, CHIP 5.6K 0.50% 1/16W
R342	1-216-864-11	s	METAL, CHIP 0 5% 1/16W
R343	1-218-692-11	s	METAL, CHIP 1K 0.50% 1/16W
R344	1-218-692-11	s	METAL, CHIP 1K 0.50% 1/16W
R345	1-218-716-11	s	METAL, CHIP 10K 0.50% 1/16W
R346	1-216-864-11	s	METAL, CHIP 0 5% 1/16W
R347	1-216-864-11	s	METAL, CHIP 0 5% 1/16W
R348	1-218-716-11	s	METAL, CHIP 10K 0.50% 1/16W
R349	1-218-684-11	s	METAL, CHIP 470 0.50% 1/16W
R350	1-216-864-11	s	METAL, CHIP 0 5% 1/16W
R352	1-218-720-11	s	METAL, CHIP 15K 0.50% 1/16W
R353	1-218-692-11	s	METAL, CHIP 1K 0.50% 1/16W
R354	1-218-687-11	s	METAL, CHIP 620 0.50% 1/16W
R355	1-218-698-11	s	METAL, CHIP 1.8K 0.50% 1/16W
R356	1-216-864-11	s	METAL, CHIP 0 5% 1/16W
R357	1-216-864-11	s	METAL, CHIP 0 5% 1/16W
R358	1-216-864-11	s	METAL, CHIP 0 5% 1/16W
R359	1-216-864-11	s	METAL, CHIP 0 5% 1/16W
R360	1-218-668-11	s	METAL, CHIP 100 0.50% 1/16W
R361	1-218-694-11	s	METAL, CHIP 1.2K 0.50% 1/16W
R362	1-216-864-11	s	METAL, CHIP 0 5% 1/16W
R363	1-216-864-11	s	METAL, CHIP 0 5% 1/16W
R364	1-218-644-11	s	METAL, CHIP 10 0.50% 1/16W
R365	1-218-644-11	s	METAL, CHIP 10 0.50% 1/16W
R366	1-218-684-11	s	METAL, CHIP 470 0.50% 1/16W
R367	1-218-684-11	s	METAL, CHIP 470 0.50% 1/16W
R368	1-218-684-11	s	METAL, CHIP 470 0.50% 1/16W
R369	1-218-684-11	s	METAL, CHIP 470 0.50% 1/16W
R370	1-218-704-11	s	METAL, CHIP 3.3K 0.50% 1/16W
R371	1-218-660-11	s	METAL, CHIP 47 0.50% 1/16W
R372	1-216-864-11	s	METAL, CHIP 0 5% 1/16W
R373	1-218-746-11	s	METAL, CHIP 180K 0.50% 1/16W
R374	1-216-864-11	s	METAL, CHIP 0 5% 1/16W
R375	1-218-700-11	s	METAL, CHIP 2.2K 0.50% 1/16W
R376	1-216-864-11	s	METAL, CHIP 0 5% 1/16W
R378	1-218-692-11	s	METAL, CHIP 1K 0.50% 1/16W
R379	1-218-700-11	s	METAL, CHIP 2.2K 0.50% 1/16W
R380	1-218-732-11	s	METAL, CHIP 47K 0.50% 1/16W
R381	1-218-732-11	s	METAL, CHIP 47K 0.50% 1/16W
R382	1-218-720-11	s	METAL, CHIP 15K 0.50% 1/16W
R401	1-218-716-11	s	METAL, CHIP 10K 0.50% 1/16W
R402	1-218-716-11	s	METAL, CHIP 10K 0.50% 1/16W
R403	1-218-716-11	s	METAL, CHIP 10K 0.50% 1/16W
R404	1-218-692-11	s	METAL, CHIP 1K 0.50% 1/16W
R405	1-218-716-11	s	METAL, CHIP 10K 0.50% 1/16W
R406	1-218-716-11	s	METAL, CHIP 10K 0.50% 1/16W
R407	1-218-668-11	s	METAL, CHIP 100 0.50% 1/16W
R408	1-218-716-11	s	METAL, CHIP 10K 0.50% 1/16W
R409	1-218-716-11	s	METAL, CHIP 10K 0.50% 1/16W
R410	1-218-644-11	s	METAL, CHIP 10 0.50% 1/16W

(DVP-1 BOARD)

Ref. No. or Q'ty	Part No.	SP	Description
R411	1-218-644-11	s	METAL, CHIP 10 0.50% 1/16W
R412	1-218-716-11	s	METAL, CHIP 10K 0.50% 1/16W
R413	1-218-668-11	s	METAL, CHIP 100 0.50% 1/16W
R414	1-218-696-11	s	METAL, CHIP 1.5K 0.50% 1/16W
R415	1-218-660-11	s	METAL, CHIP 47 0.50% 1/16W
R416	1-218-692-11	s	METAL, CHIP 1K 0.50% 1/16W
R417	1-218-684-11	s	METAL, CHIP 470 0.50% 1/16W
R418	1-218-689-11	s	METAL, CHIP 750 0.50% 1/16W
R419	1-218-684-11	s	METAL, CHIP 470 0.50% 1/16W
R420	1-218-668-11	s	METAL, CHIP 100 0.50% 1/16W
R421	1-218-660-11	s	METAL, CHIP 47 0.50% 1/16W
R422	1-218-692-11	s	METAL, CHIP 1K 0.50% 1/16W
R423	1-218-664-11	s	METAL, CHIP 68 0.50% 1/16W
R424	1-218-689-11	s	METAL, CHIP 750 0.50% 1/16W
R425	1-218-660-11	s	METAL, CHIP 47 0.50% 1/16W
R426	1-218-692-11	s	METAL, CHIP 1K 0.50% 1/16W
R427	1-218-665-11	s	METAL, CHIP 75 0.50% 1/16W
R428	1-218-689-11	s	METAL, CHIP 750 0.50% 1/16W
R429	1-218-720-11	s	METAL, CHIP 15K 0.50% 1/16W
R430	1-218-716-11	s	METAL, CHIP 10K 0.50% 1/16W
R434	1-218-724-11	s	METAL, CHIP 22K 0.50% 1/16W
R435	1-218-722-11	s	METAL, CHIP 18K 0.50% 1/16W
R436	1-218-726-11	s	METAL, CHIP 27K 0.50% 1/16W
R437	1-216-864-11	s	METAL, CHIP 0 5% 1/16W
R439	1-218-696-11	s	METAL, CHIP 1.5K 0.50% 1/16W
R440	1-218-716-11	s	METAL, CHIP 10K 0.50% 1/16W
R441	1-218-710-11	s	METAL, CHIP 5.6K 0.50% 1/16W
R442	1-216-864-11	s	METAL, CHIP 0 5% 1/16W
R443	1-218-692-11	s	METAL, CHIP 1K 0.50% 1/16W
R444	1-218-692-11	s	METAL, CHIP 1K 0.50% 1/16W
R445	1-218-716-11	s	METAL, CHIP 10K 0.50% 1/16W
R446	1-216-864-11	s	METAL, CHIP 0 5% 1/16W
R447	1-216-864-11	s	METAL, CHIP 0 5% 1/16W
R448	1-218-716-11	s	METAL, CHIP 10K 0.50% 1/16W
R449	1-218-684-11	s	METAL, CHIP 470 0.50% 1/16W
R450	1-216-864-11	s	METAL, CHIP 0 5% 1/16W
R454	1-218-687-11	s	METAL, CHIP 620 0.50% 1/16W
R455	1-218-698-11	s	METAL, CHIP 1.8K 0.50% 1/16W
R456	1-216-864-11	s	METAL, CHIP 0 5% 1/16W
R457	1-216-864-11	s	METAL, CHIP 0 5% 1/16W
R458	1-216-864-11	s	METAL, CHIP 0 5% 1/16W
R459	1-216-864-11	s	METAL, CHIP 0 5% 1/16W
R460	1-218-668-11	s	METAL, CHIP 100 0.50% 1/16W
R461	1-218-694-11	s	METAL, CHIP 1.2K 0.50% 1/16W
R462	1-216-864-11	s	METAL, CHIP 0 5% 1/16W
R463	1-216-864-11	s	METAL, CHIP 0 5% 1/16W
R464	1-218-644-11	s	METAL, CHIP 10 0.50% 1/16W
R465	1-218-644-11	s	METAL, CHIP 10 0.50% 1/16W
R466	1-218-684-11	s	METAL, CHIP 470 0.50% 1/16W
R467	1-218-684-11	s	METAL, CHIP 470 0.50% 1/16W
R468	1-218-684-11	s	METAL, CHIP 470 0.50% 1/16W
R469	1-218-684-11	s	METAL, CHIP 470 0.50% 1/16W
R470	1-218-704-11	s	METAL, CHIP 3.3K 0.50% 1/16W
R471	1-218-660-11	s	METAL, CHIP 47 0.50% 1/16W
R472	1-216-864-11	s	METAL, CHIP 0 5% 1/16W
R474	1-216-864-11	s	METAL, CHIP 0 5% 1/16W
R475	1-218-700-11	s	METAL, CHIP 2.2K 0.50% 1/16W
R476	1-216-864-11	s	METAL, CHIP 0 5% 1/16W
R478	1-218-692-11	s	METAL, CHIP 1K 0.50% 1/16W

(DVP-1 BOARD)

Ref. No. or Q'ty	Part No.	SP	Description
R482	1-218-720-11	s	METAL, CHIP 15K 0.50% 1/16W
R501	1-218-716-11	s	METAL, CHIP 10K 0.50% 1/16W
R502	1-218-716-11	s	METAL, CHIP 10K 0.50% 1/16W
R503	1-218-716-11	s	METAL, CHIP 10K 0.50% 1/16W
R504	1-218-692-11	s	METAL, CHIP 1K 0.50% 1/16W
R505	1-218-716-11	s	METAL, CHIP 10K 0.50% 1/16W
R506	1-218-716-11	s	METAL, CHIP 10K 0.50% 1/16W
R507	1-218-668-11	s	METAL, CHIP 100 0.50% 1/16W
R508	1-218-716-11	s	METAL, CHIP 10K 0.50% 1/16W
R509	1-218-716-11	s	METAL, CHIP 10K 0.50% 1/16W
R510	1-218-644-11	s	METAL, CHIP 10 0.50% 1/16W
R511	1-218-644-11	s	METAL, CHIP 10 0.50% 1/16W
R512	1-218-716-11	s	METAL, CHIP 10K 0.50% 1/16W
R513	1-218-668-11	s	METAL, CHIP 100 0.50% 1/16W
R514	1-218-696-11	s	METAL, CHIP 1.5K 0.50% 1/16W
R515	1-218-660-11	s	METAL, CHIP 47 0.50% 1/16W
R516	1-218-692-11	s	METAL, CHIP 1K 0.50% 1/16W
R517	1-218-684-11	s	METAL, CHIP 470 0.50% 1/16W
R518	1-218-689-11	s	METAL, CHIP 750 0.50% 1/16W
R519	1-218-684-11	s	METAL, CHIP 470 0.50% 1/16W
R520	1-218-668-11	s	METAL, CHIP 100 0.50% 1/16W
R521	1-218-660-11	s	METAL, CHIP 47 0.50% 1/16W
R522	1-218-692-11	s	METAL, CHIP 1K 0.50% 1/16W
R523	1-218-664-11	s	METAL, CHIP 68 0.50% 1/16W
R524	1-218-689-11	s	METAL, CHIP 750 0.50% 1/16W
R525	1-218-660-11	s	METAL, CHIP 47 0.50% 1/16W
R526	1-218-692-11	s	METAL, CHIP 1K 0.50% 1/16W
R527	1-218-665-11	s	METAL, CHIP 75 0.50% 1/16W
R528	1-218-689-11	s	METAL, CHIP 750 0.50% 1/16W
R529	1-218-720-11	s	METAL, CHIP 15K 0.50% 1/16W
R530	1-218-716-11	s	METAL, CHIP 10K 0.50% 1/16W
R534	1-218-724-11	s	METAL, CHIP 22K 0.50% 1/16W
R535	1-218-722-11	s	METAL, CHIP 18K 0.50% 1/16W
R536	1-218-726-11	s	METAL, CHIP 27K 0.50% 1/16W
R537	1-216-864-11	s	METAL, CHIP 0 5% 1/16W
R539	1-218-696-11	s	METAL, CHIP 1.5K 0.50% 1/16W
R540	1-218-716-11	s	METAL, CHIP 10K 0.50% 1/16W
R541	1-218-710-11	s	METAL, CHIP 5.6K 0.50% 1/16W
R542	1-216-864-11	s	METAL, CHIP 0 5% 1/16W
R543	1-218-692-11	s	METAL, CHIP 1K 0.50% 1/16W
R544	1-218-692-11	s	METAL, CHIP 1K 0.50% 1/16W
R545	1-218-716-11	s	METAL, CHIP 10K 0.50% 1/16W
R546	1-216-864-11	s	METAL, CHIP 0 5% 1/16W
R547	1-216-864-11	s	METAL, CHIP 0 5% 1/16W
R548	1-218-716-11	s	METAL, CHIP 10K 0.50% 1/16W
R549	1-218-684-11	s	METAL, CHIP 470 0.50% 1/16W
R550	1-216-864-11	s	METAL, CHIP 0 5% 1/16W
R554	1-218-687-11	s	METAL, CHIP 620 0.50% 1/16W
R555	1-218-698-11	s	METAL, CHIP 1.8K 0.50% 1/16W
R556	1-216-864-11	s	METAL, CHIP 0 5% 1/16W
R557	1-216-864-11	s	METAL, CHIP 0 5% 1/16W
R558	1-216-864-11	s	METAL, CHIP 0 5% 1/16W
R559	1-216-864-11	s	METAL, CHIP 0 5% 1/16W
R560	1-218-668-11	s	METAL, CHIP 100 0.50% 1/16W
R561	1-218-694-11	s	METAL, CHIP 1.2K 0.50% 1/16W
R562	1-216-864-11	s	METAL, CHIP 0 5% 1/16W
R563	1-216-864-11	s	METAL, CHIP 0 5% 1/16W
R564	1-218-644-11	s	METAL, CHIP 10 0.50% 1/16W
R565	1-218-644-11	s	METAL, CHIP 10 0.50% 1/16W

(DVP-1 BOARD)

Ref. No. or Q'ty	Part No.	SP	Description
R566	1-218-684-11	s	METAL, CHIP 470 0.50% 1/16W
R567	1-218-684-11	s	METAL, CHIP 470 0.50% 1/16W
R568	1-218-684-11	s	METAL, CHIP 470 0.50% 1/16W
R569	1-218-684-11	s	METAL, CHIP 470 0.50% 1/16W
R570	1-218-704-11	s	METAL, CHIP 3.3K 0.50% 1/16W
R571	1-218-660-11	s	METAL, CHIP 47 0.50% 1/16W
R572	1-216-864-11	s	METAL, CHIP 0 5% 1/16W
R574	1-216-864-11	s	METAL, CHIP 0 5% 1/16W
R575	1-218-700-11	s	METAL, CHIP 2.2K 0.50% 1/16W
R576	1-216-864-11	s	METAL, CHIP 0 5% 1/16W
R578	1-218-692-11	s	METAL, CHIP 1K 0.50% 1/16W
R582	1-218-720-11	s	METAL, CHIP 15K 0.50% 1/16W
R601	1-218-716-11	s	METAL, CHIP 10K 0.50% 1/16W
R602	1-218-716-11	s	METAL, CHIP 10K 0.50% 1/16W
R603	1-218-716-11	s	METAL, CHIP 10K 0.50% 1/16W
R604	1-218-692-11	s	METAL, CHIP 1K 0.50% 1/16W
R605	1-218-716-11	s	METAL, CHIP 10K 0.50% 1/16W
R606	1-218-716-11	s	METAL, CHIP 10K 0.50% 1/16W
R607	1-218-668-11	s	METAL, CHIP 100 0.50% 1/16W
R608	1-218-716-11	s	METAL, CHIP 10K 0.50% 1/16W
R609	1-218-716-11	s	METAL, CHIP 10K 0.50% 1/16W
R610	1-218-644-11	s	METAL, CHIP 10 0.50% 1/16W
R611	1-218-644-11	s	METAL, CHIP 10 0.50% 1/16W
R612	1-218-716-11	s	METAL, CHIP 10K 0.50% 1/16W
R613	1-218-668-11	s	METAL, CHIP 100 0.50% 1/16W
R614	1-218-696-11	s	METAL, CHIP 1.5K 0.50% 1/16W
R615	1-218-660-11	s	METAL, CHIP 47 0.50% 1/16W
R616	1-218-692-11	s	METAL, CHIP 1K 0.50% 1/16W
R617	1-218-684-11	s	METAL, CHIP 470 0.50% 1/16W
R618	1-218-689-11	s	METAL, CHIP 750 0.50% 1/16W
R619	1-218-684-11	s	METAL, CHIP 470 0.50% 1/16W
R620	1-218-668-11	s	METAL, CHIP 100 0.50% 1/16W
R621	1-218-660-11	s	METAL, CHIP 47 0.50% 1/16W
R622	1-218-692-11	s	METAL, CHIP 1K 0.50% 1/16W
R623	1-218-664-11	s	METAL, CHIP 68 0.50% 1/16W
R624	1-218-689-11	s	METAL, CHIP 750 0.50% 1/16W
R625	1-218-660-11	s	METAL, CHIP 47 0.50% 1/16W
R626	1-218-692-11	s	METAL, CHIP 1K 0.50% 1/16W
R627	1-218-665-11	s	METAL, CHIP 75 0.50% 1/16W
R628	1-218-689-11	s	METAL, CHIP 750 0.50% 1/16W
R629	1-218-720-11	s	METAL, CHIP 15K 0.50% 1/16W
R630	1-218-716-11	s	METAL, CHIP 10K 0.50% 1/16W
R634	1-218-724-11	s	METAL, CHIP 22K 0.50% 1/16W
R635	1-218-722-11	s	METAL, CHIP 18K 0.50% 1/16W
R636	1-218-726-11	s	METAL, CHIP 27K 0.50% 1/16W
R637	1-216-864-11	s	METAL, CHIP 0 5% 1/16W
R639	1-218-696-11	s	METAL, CHIP 1.5K 0.50% 1/16W
R640	1-218-716-11	s	METAL, CHIP 10K 0.50% 1/16W
R641	1-218-710-11	s	METAL, CHIP 5.6K 0.50% 1/16W
R642	1-216-864-11	s	METAL, CHIP 0 5% 1/16W
R643	1-218-692-11	s	METAL, CHIP 1K 0.50% 1/16W
R644	1-218-692-11	s	METAL, CHIP 1K 0.50% 1/16W
R645	1-218-716-11	s	METAL, CHIP 10K 0.50% 1/16W
R646	1-216-864-11	s	METAL, CHIP 0 5% 1/16W
R647	1-216-864-11	s	METAL, CHIP 0 5% 1/16W
R648	1-218-716-11	s	METAL, CHIP 10K 0.50% 1/16W
R649	1-218-684-11	s	METAL, CHIP 470 0.50% 1/16W
R650	1-216-864-11	s	METAL, CHIP 0 5% 1/16W
R654	1-218-687-11	s	METAL, CHIP 620 0.50% 1/16W

(DVP-1 BOARD)

Ref. No. or Q'ty	Part No.	SP	Description
R655	1-218-698-11	s	METAL, CHIP 1.8K 0.50% 1/16W
R656	1-216-864-11	s	METAL, CHIP 0 5% 1/16W
R657	1-216-864-11	s	METAL, CHIP 0 5% 1/16W
R658	1-216-864-11	s	METAL, CHIP 0 5% 1/16W
R659	1-216-864-11	s	METAL, CHIP 0 5% 1/16W
R660	1-218-668-11	s	METAL, CHIP 100 0.50% 1/16W
R661	1-218-694-11	s	METAL, CHIP 1.2K 0.50% 1/16W
R662	1-216-864-11	s	METAL, CHIP 0 5% 1/16W
R663	1-216-864-11	s	METAL, CHIP 0 5% 1/16W
R664	1-218-644-11	s	METAL, CHIP 10 0.50% 1/16W
R665	1-218-644-11	s	METAL, CHIP 10 0.50% 1/16W
R666	1-218-684-11	s	METAL, CHIP 470 0.50% 1/16W
R667	1-218-684-11	s	METAL, CHIP 470 0.50% 1/16W
R668	1-218-684-11	s	METAL, CHIP 470 0.50% 1/16W
R669	1-218-684-11	s	METAL, CHIP 470 0.50% 1/16W
R670	1-218-704-11	s	METAL, CHIP 3.3K 0.50% 1/16W
R671	1-218-660-11	s	METAL, CHIP 47 0.50% 1/16W
R672	1-216-864-11	s	METAL, CHIP 0 5% 1/16W
R674	1-216-864-11	s	METAL, CHIP 0 5% 1/16W
R675	1-218-700-11	s	METAL, CHIP 2.2K 0.50% 1/16W
R676	1-216-864-11	s	METAL, CHIP 0 5% 1/16W
R678	1-218-692-11	s	METAL, CHIP 1K 0.50% 1/16W
R682	1-218-720-11	s	METAL, CHIP 15K 0.50% 1/16W
R701	1-218-740-11	s	METAL, CHIP 100K 0.50% 1/16W
R702	1-218-740-11	s	METAL, CHIP 100K 0.50% 1/16W
R703	1-218-740-11	s	METAL, CHIP 100K 0.50% 1/16W
R704	1-218-740-11	s	METAL, CHIP 100K 0.50% 1/16W
R705	1-218-692-11	s	METAL, CHIP 1K 0.50% 1/16W
R706	1-218-692-11	s	METAL, CHIP 1K 0.50% 1/16W
R707	1-218-692-11	s	METAL, CHIP 1K 0.50% 1/16W
R708	1-218-692-11	s	METAL, CHIP 1K 0.50% 1/16W
R709	1-218-716-11	s	METAL, CHIP 10K 0.50% 1/16W
R710	1-218-660-11	s	METAL, CHIP 47 0.50% 1/16W
R711	1-218-660-11	s	METAL, CHIP 47 0.50% 1/16W
R712	1-218-676-11	s	METAL, CHIP 220 0.50% 1/16W
R715-721	1-216-864-11	s	METAL, CHIP 0 5% 1/16W
R723	1-218-724-11	s	METAL, CHIP 22K 0.50% 1/16W
R724	1-218-732-11	s	METAL, CHIP 47K 0.50% 1/16W
R725	1-218-732-11	s	METAL, CHIP 47K 0.50% 1/16W
R726	1-218-724-11	s	METAL, CHIP 22K 0.50% 1/16W
R727	1-218-724-11	s	METAL, CHIP 22K 0.50% 1/16W
R728	1-218-732-11	s	METAL, CHIP 47K 0.50% 1/16W
R729	1-218-732-11	s	METAL, CHIP 47K 0.50% 1/16W
R730	1-218-724-11	s	METAL, CHIP 22K 0.50% 1/16W
R731	1-218-724-11	s	METAL, CHIP 22K 0.50% 1/16W
R732	1-218-732-11	s	METAL, CHIP 47K 0.50% 1/16W
R733	1-218-732-11	s	METAL, CHIP 47K 0.50% 1/16W
R734	1-218-724-11	s	METAL, CHIP 22K 0.50% 1/16W
R735	1-218-724-11	s	METAL, CHIP 22K 0.50% 1/16W
R736	1-218-732-11	s	METAL, CHIP 47K 0.50% 1/16W
R737	1-218-732-11	s	METAL, CHIP 47K 0.50% 1/16W
R738	1-218-724-11	s	METAL, CHIP 22K 0.50% 1/16W
R739	1-218-700-11	s	METAL, CHIP 2.2K 0.50% 1/16W
R740	1-218-700-11	s	METAL, CHIP 2.2K 0.50% 1/16W
R741	1-218-700-11	s	METAL, CHIP 2.2K 0.50% 1/16W
R742	1-218-700-11	s	METAL, CHIP 2.2K 0.50% 1/16W
R743	1-218-732-11	s	METAL, CHIP 47K 0.50% 1/16W
R744	1-218-732-11	s	METAL, CHIP 47K 0.50% 1/16W
R745	1-218-732-11	s	METAL, CHIP 47K 0.50% 1/16W

(DVP-1 BOARD)

Ref. No. or Q'ty	Part No.	SP	Description
R746	1-218-732-11	s	METAL, CHIP 47K 0.50% 1/16W
R747	1-218-700-11	s	METAL, CHIP 2.2K 0.50% 1/16W
R748	1-218-732-11	s	METAL, CHIP 47K 0.50% 1/16W
R749	1-218-700-11	s	METAL, CHIP 2.2K 0.50% 1/16W
R750	1-218-732-11	s	METAL, CHIP 47K 0.50% 1/16W
R751	1-218-700-11	s	METAL, CHIP 2.2K 0.50% 1/16W
R752	1-218-732-11	s	METAL, CHIP 47K 0.50% 1/16W
R753	1-218-700-11	s	METAL, CHIP 2.2K 0.50% 1/16W
R754	1-218-732-11	s	METAL, CHIP 47K 0.50% 1/16W
R755	1-216-864-11	s	METAL, CHIP 0 5% 1/16W
R756	1-216-864-11	s	METAL, CHIP 0 5% 1/16W
R757	1-216-864-11	s	METAL, CHIP 0 5% 1/16W
R759-778	1-218-732-11	s	METAL, CHIP 47K 0.50% 1/16W
R779	1-218-660-11	s	METAL, CHIP 47 0.50% 1/16W
R780	1-218-732-11	s	METAL, CHIP 47K 0.50% 1/16W
R781	1-218-732-11	s	METAL, CHIP 47K 0.50% 1/16W
R782	1-218-732-11	s	METAL, CHIP 47K 0.50% 1/16W
R783	1-218-732-11	s	METAL, CHIP 47K 0.50% 1/16W
R784	1-218-740-11	s	METAL, CHIP 100K 0.50% 1/16W
R785	1-218-732-11	s	METAL, CHIP 47K 0.50% 1/16W
R786	1-218-732-11	s	METAL, CHIP 47K 0.50% 1/16W
R787	1-218-732-11	s	METAL, CHIP 47K 0.50% 1/16W
R788	1-218-732-11	s	METAL, CHIP 47K 0.50% 1/16W
R789	1-218-716-11	s	METAL, CHIP 10K 0.50% 1/16W
R790	1-218-716-11	s	METAL, CHIP 10K 0.50% 1/16W
R791	1-218-716-11	s	METAL, CHIP 10K 0.50% 1/16W
R792	1-218-716-11	s	METAL, CHIP 10K 0.50% 1/16W
R801	1-216-857-11	s	METAL, CHIP 1M 5% 1/16W
R803	1-218-692-11	s	METAL, CHIP 1K 0.50% 1/16W
R804	1-218-724-11	s	METAL, CHIP 22K 0.50% 1/16W
R805	1-218-724-11	s	METAL, CHIP 22K 0.50% 1/16W
R806	1-218-740-11	s	METAL, CHIP 100K 0.50% 1/16W
R807	1-218-708-11	s	METAL, CHIP 4.7K 0.50% 1/16W
R808	1-218-719-11	s	METAL, CHIP 13K 0.50% 1/16W
R809	1-218-716-11	s	METAL, CHIP 10K 0.50% 1/16W
R810	1-218-692-11	s	METAL, CHIP 1K 0.50% 1/16W
R811	1-218-740-11	s	METAL, CHIP 100K 0.50% 1/16W
R812	1-218-740-11	s	METAL, CHIP 100K 0.50% 1/16W
R813	1-216-864-11	s	METAL, CHIP 0 5% 1/16W
R814	1-216-864-11	s	METAL, CHIP 0 5% 1/16W
R816	1-218-652-11	s	METAL, CHIP 22 0.50% 1/16W
R817	1-218-652-11	s	METAL, CHIP 22 0.50% 1/16W
R818	1-218-660-11	s	METAL, CHIP 47 0.50% 1/16W
R819	1-218-668-11	s	METAL, CHIP 100 0.50% 1/16W
R820	1-216-864-11	s	METAL, CHIP 0 5% 1/16W
R821	1-216-864-11	s	METAL, CHIP 0 5% 1/16W
R822	1-218-660-11	s	METAL, CHIP 47 0.50% 1/16W
R823	1-216-864-11	s	METAL, CHIP 0 5% 1/16W
R824-831	1-218-668-11	s	METAL, CHIP 100 0.50% 1/16W
R832	1-218-660-11	s	METAL, CHIP 47 0.50% 1/16W
R833	1-218-660-11	s	METAL, CHIP 47 0.50% 1/16W
R834	1-218-660-11	s	METAL, CHIP 47 0.50% 1/16W
R835	1-218-740-11	s	METAL, CHIP 100K 0.50% 1/16W
R836	1-218-660-11	s	METAL, CHIP 47 0.50% 1/16W
R838	1-218-740-11	s	METAL, CHIP 100K 0.50% 1/16W
R840	1-216-864-11	s	METAL, CHIP 0 5% 1/16W
R841	1-216-864-11	s	METAL, CHIP 0 5% 1/16W
R843	1-218-668-11	s	METAL, CHIP 100 0.50% 1/16W
R844	1-218-740-11	s	METAL, CHIP 100K 0.50% 1/16W

(DVP-1 BOARD)

Ref. No. or Q'ty	Part No.	SP	Description
R847	1-216-864-11	s	METAL, CHIP 0 5% 1/16W
R848	1-215-421-00	s	METAL 1K 1% 1/6W
R901	1-216-864-11	s	METAL, CHIP 0 5% 1/16W
R902	1-216-864-11	s	METAL, CHIP 0 5% 1/16W
R903	1-216-864-11	s	METAL, CHIP 0 5% 1/16W
R904	1-216-864-11	s	METAL, CHIP 0 5% 1/16W
R905	1-218-740-11	s	METAL, CHIP 100K 0.50% 1/16W
R906	1-218-740-11	s	METAL, CHIP 100K 0.50% 1/16W
R907	1-216-864-11	s	METAL, CHIP 0 5% 1/16W
R908	1-218-668-11	s	METAL, CHIP 100 0.50% 1/16W
R909	1-216-864-11	s	METAL, CHIP 0 5% 1/16W
R910	1-216-864-11	s	METAL, CHIP 0 5% 1/16W
R911	1-216-864-11	s	METAL, CHIP 0 5% 1/16W
R913	1-216-864-11	s	METAL, CHIP 0 5% 1/16W
R914	1-216-864-11	s	METAL, CHIP 0 5% 1/16W
R917	1-218-740-11	s	METAL, CHIP 100K 0.50% 1/16W
R920	1-218-740-11	s	METAL, CHIP 100K 0.50% 1/16W
R921	1-218-740-11	s	METAL, CHIP 100K 0.50% 1/16W
R922	1-216-864-11	s	METAL, CHIP 0 5% 1/16W
R923	1-216-864-11	s	METAL, CHIP 0 5% 1/16W
R924	1-216-864-11	s	METAL, CHIP 0 5% 1/16W
R925	1-216-864-11	s	METAL, CHIP 0 5% 1/16W
R1000	1-218-692-11	s	METAL, CHIP 1K 0.50% 1/16W
R1001	1-218-740-11	s	METAL, CHIP 100K 0.50% 1/16W
R1002	1-218-720-11	s	METAL, CHIP 15K 0.50% 1/16W
R1003	1-218-720-11	s	METAL, CHIP 15K 0.50% 1/16W
R1004	1-218-740-11	s	METAL, CHIP 100K 0.50% 1/16W
R1005	1-218-740-11	s	METAL, CHIP 100K 0.50% 1/16W
R1006	1-218-720-11	s	METAL, CHIP 15K 0.50% 1/16W
R1007	1-218-720-11	s	METAL, CHIP 15K 0.50% 1/16W
R1008	1-218-740-11	s	METAL, CHIP 100K 0.50% 1/16W
R1010	1-218-740-11	s	METAL, CHIP 100K 0.50% 1/16W
R1011	1-218-720-11	s	METAL, CHIP 15K 0.50% 1/16W
R1013	1-218-740-11	s	METAL, CHIP 100K 0.50% 1/16W
R1014	1-218-740-11	s	METAL, CHIP 100K 0.50% 1/16W
R1015	1-218-740-11	s	METAL, CHIP 100K 0.50% 1/16W
R1016	1-218-720-11	s	METAL, CHIP 15K 0.50% 1/16W
R1017	1-218-720-11	s	METAL, CHIP 15K 0.50% 1/16W
R1018	1-218-740-11	s	METAL, CHIP 100K 0.50% 1/16W
R1019	1-218-740-11	s	METAL, CHIP 100K 0.50% 1/16W
R1020	1-218-740-11	s	METAL, CHIP 100K 0.50% 1/16W
R1021	1-218-740-11	s	METAL, CHIP 100K 0.50% 1/16W
R1022	1-218-720-11	s	METAL, CHIP 15K 0.50% 1/16W
R1023	1-218-720-11	s	METAL, CHIP 15K 0.50% 1/16W
R1024	1-218-740-11	s	METAL, CHIP 100K 0.50% 1/16W
R1025	1-218-740-11	s	METAL, CHIP 100K 0.50% 1/16W
R1026	1-218-720-11	s	METAL, CHIP 15K 0.50% 1/16W
R1027	1-218-720-11	s	METAL, CHIP 15K 0.50% 1/16W
R1028	1-218-740-11	s	METAL, CHIP 100K 0.50% 1/16W
R1030	1-216-864-11	s	METAL, CHIP 0 5% 1/16W
R1031	1-218-740-11	s	METAL, CHIP 100K 0.50% 1/16W
R1032	1-218-740-11	s	METAL, CHIP 100K 0.50% 1/16W
R1033	1-218-720-11	s	METAL, CHIP 15K 0.50% 1/16W
R1034	1-218-720-11	s	METAL, CHIP 15K 0.50% 1/16W
RB1	1-236-904-11	s	NETWORK RESISTOR (CHIP) 1.0K
RB2	1-236-904-11	s	NETWORK RESISTOR (CHIP) 1.0K
RB3	1-236-904-11	s	NETWORK RESISTOR (CHIP) 1.0K
RB4	1-239-444-11	s	NETWORK RESISTOR (CHIP) 220K
RB5	1-239-444-11	s	NETWORK RESISTOR (CHIP) 220K

(DVP-1 BOARD)

Ref. No. or Q'ty	Part No.	SP	Description
RB6	1-239-310-11	s	RESISTOR ARRAY, CHIP 220K
RB7	1-239-310-11	s	RESISTOR ARRAY, CHIP 220K
RB8	1-239-310-11	s	RESISTOR ARRAY, CHIP 220K
RB9	1-239-444-11	s	NETWORK RESISTOR (CHIP) 220K
RB10	1-236-904-11	s	NETWORK RESISTOR (CHIP) 1.0K
RB11	1-236-904-11	s	NETWORK RESISTOR (CHIP) 1.0K
RB12	1-239-310-11	s	RESISTOR ARRAY, CHIP 220K
RB13	1-239-310-11	s	RESISTOR ARRAY, CHIP 220K
RB14	1-239-444-11	s	NETWORK RESISTOR (CHIP) 220K
RB15	1-239-310-11	s	RESISTOR ARRAY, CHIP 220K
RB16	1-239-444-11	s	NETWORK RESISTOR (CHIP) 220K
RB17	1-239-444-11	s	NETWORK RESISTOR (CHIP) 220K
RB19	1-239-444-11	s	NETWORK RESISTOR (CHIP) 220K
RB20	1-239-444-11	s	NETWORK RESISTOR (CHIP) 220K
RB21	1-239-621-11	s	NETWORK RESISTOR (CHIP) 22
RB22	1-239-621-11	s	NETWORK RESISTOR (CHIP) 22
RB23	1-239-621-11	s	NETWORK RESISTOR (CHIP) 22
RB24	1-239-444-11	s	NETWORK RESISTOR (CHIP) 220K
RB25	1-236-904-11	s	NETWORK RESISTOR (CHIP) 1.0K
RB26	1-236-904-11	s	NETWORK RESISTOR (CHIP) 1.0K
RB201	1-236-907-11	s	NETWORK RESISTOR (CHIP) 100K
RB701	1-239-416-11	s	NETWORK RESISTOR (CHIP) 220
RB702	1-239-416-11	s	NETWORK RESISTOR (CHIP) 220
RB901	1-236-907-11	s	NETWORK RESISTOR (CHIP) 100K
RB902	1-236-907-11	s	NETWORK RESISTOR (CHIP) 100K
S1	1-692-271-31	s	SWITCH, SLIDE
S2	1-692-270-41	s	SWITCH, SLIDE
S3	1-692-271-31	s	SWITCH, SLIDE
X1	1-760-778-21	s	CRYSTAL 32.000000MHz
X2	1-767-208-11	s	CRYSTAL 4.9152000MHz

DVP-2 BOARD

Ref. No. or Q'ty	Part No.	SP	Description
1pc	A-8277-534-A	o	MOUNTED CIRCUIT BOARD, DVP-2
C106	1-104-852-11	s	TANTALUM, CHIP 22uF 20% 10V
C108	1-104-852-11	s	TANTALUM, CHIP 22uF 20% 10V
C109	1-104-852-11	s	TANTALUM, CHIP 22uF 20% 10V
C110	1-104-852-11	s	TANTALUM, CHIP 22uF 20% 10V
C111	1-104-913-11	s	TANTALUM, CHIP 10uF 20% 16V
C115-119	1-107-826-11	s	CERAMIC, CHIP 0.1uF 10% 16V
C122-139	1-107-826-11	s	CERAMIC, CHIP 0.1uF 10% 16V
C201-239	1-107-826-11	s	CERAMIC, CHIP 0.1uF 10% 16V
C241-252	1-107-826-11	s	CERAMIC, CHIP 0.1uF 10% 16V
C302-310	1-107-826-11	s	CERAMIC, CHIP 0.1uF 10% 16V
C314	1-107-826-11	s	CERAMIC, CHIP 0.1uF 10% 16V
C316	1-107-826-11	s	CERAMIC, CHIP 0.1uF 10% 16V
C319-323	1-107-826-11	s	CERAMIC, CHIP 0.1uF 10% 16V
C326	1-107-826-11	s	CERAMIC, CHIP 0.1uF 10% 16V
C327	1-107-826-11	s	CERAMIC, CHIP 0.1uF 10% 16V
C328	1-107-826-11	s	CERAMIC, CHIP 0.1uF 10% 16V
C334	1-107-826-11	s	CERAMIC, CHIP 0.1uF 10% 16V
C337	1-107-826-11	s	CERAMIC, CHIP 0.1uF 10% 16V
C339-343	1-107-826-11	s	CERAMIC, CHIP 0.1uF 10% 16V
C401-410	1-107-826-11	s	CERAMIC, CHIP 0.1uF 10% 16V
C411	1-104-851-11	s	TANTALUM, CHIP 10uF 20% 10V
C412	1-107-826-11	s	CERAMIC, CHIP 0.1uF 10% 16V
C414-419	1-107-826-11	s	CERAMIC, CHIP 0.1uF 10% 16V
C501	1-107-826-11	s	CERAMIC, CHIP 0.1uF 10% 16V
C502	1-107-826-11	s	CERAMIC, CHIP 0.1uF 10% 16V
C504-519	1-107-826-11	s	CERAMIC, CHIP 0.1uF 10% 16V
C601-609	1-107-826-11	s	CERAMIC, CHIP 0.1uF 10% 16V
C611	1-107-826-11	s	CERAMIC, CHIP 0.1uF 10% 16V
C612	1-107-826-11	s	CERAMIC, CHIP 0.1uF 10% 16V
C614	1-107-826-11	s	CERAMIC, CHIP 0.1uF 10% 16V
C615	1-107-826-11	s	CERAMIC, CHIP 0.1uF 10% 16V
C616	1-107-826-11	s	CERAMIC, CHIP 0.1uF 10% 16V
C617	1-107-826-11	s	CERAMIC, CHIP 0.1uF 10% 16V
C619-627	1-107-826-11	s	CERAMIC, CHIP 0.1uF 10% 16V
CN10	1-778-530-11	o	CONNECTOR, BOARD TO BOARD 140P
CP401	1-767-207-11	s	CRYSTAL 15.560073MHz
D101	8-719-938-72	s	DIODE SB01-05CP
D102	8-719-938-72	s	DIODE SB01-05CP
D103	8-719-938-72	s	DIODE SB01-05CP
D104	8-719-938-72	s	DIODE SB01-05CP
D401	8-719-026-34	s	LED CL-170UR-CD, RED
FB307	1-543-256-11	s	BEAD, FERRITE
FB308	1-543-256-11	s	BEAD, FERRITE
FL101	1-117-193-11	s	CERAMIC 3, TERMINAL 1.5uF 50V
FL102	1-117-193-11	s	CERAMIC 3, TERMINAL 1.5uF 50V
FL103	1-117-193-11	s	CERAMIC 3, TERMINAL 1.5uF 50V
IC102	8-729-024-50	s	TRANSISTOR SI9936DY
IC103	8-729-024-50	s	TRANSISTOR SI9936DY
IC105	8-759-080-06	s	IC TC74VHC574FS(EL)
IC106	8-759-080-06	s	IC TC74VHC574FS(EL)
IC107	8-759-080-06	s	IC TC74VHC574FS(EL)
IC108	8-759-080-02	s	IC TC74VHC541FS(EL)
IC109	8-759-080-02	s	IC TC74VHC541FS(EL)
IC110	8-759-080-02	s	IC TC74VHC541FS(EL)
IC111	8-759-079-49	s	IC TC74VHC04FS(EL)

(DVP-2 BOARD)

Ref. No. or Q'ty	Part No.	SP	Description
IC112	8-759-079-49	s	IC TC74VHC04FS(EL)
IC113	8-759-079-52	s	IC TC74VHC08FS(EL)
IC114	8-759-079-52	s	IC TC74VHC08FS(EL)
IC116	8-759-079-87	s	IC TC74VHC245FS(EL)
IC117	8-759-079-87	s	IC TC74VHC245FS(EL)
IC118	8-759-079-87	s	IC TC74VHC245FS(EL)
IC119	8-759-080-02	s	IC TC74VHC541FS(EL)
IC120	8-759-080-02	s	IC TC74VHC541FS(EL)
IC121	8-759-080-02	s	IC TC74VHC541FS(EL)
IC122	8-759-079-49	s	IC TC74VHC04FS(EL)
IC123	8-759-079-49	s	IC TC74VHC04FS(EL)
IC125	8-759-079-52	s	IC TC74VHC08FS(EL)
IC126	8-759-196-93	s	IC TC7SH00FU-TE85R
IC127	8-759-079-52	s	IC TC74VHC08FS(EL)
IC128	8-759-196-97	s	IC TC7SH32FU-TE85R
IC129	8-759-196-97	s	IC TC7SH32FU-TE85R
IC130	8-759-080-02	s	IC TC74VHC541FS(EL)
IC131	8-759-080-06	s	IC TC74VHC574FS(EL)
IC132	8-759-196-96	s	IC TC7SH08FU-TE85R
IC134	8-759-196-96	s	IC TC7SH08FU-TE85R
IC201	8-759-175-57	s	IC CXD8820AR
IC202	8-759-080-06	s	IC TC74VHC574FS(EL)
IC203	8-759-080-06	s	IC TC74VHC574FS(EL)
IC204	8-759-375-13	s	IC CXD8973AR
IC205	8-759-296-10	s	IC UPD4516821G5-A12-7JF
IC206	8-759-296-10	s	IC UPD4516821G5-A12-7JF
IC207	8-759-296-10	s	IC UPD4516821G5-A12-7JF
IC208	8-759-296-10	s	IC UPD4516821G5-A12-7JF
IC209	8-759-186-53	s	IC TC74VHC163F
IC210	8-759-079-49	s	IC TC74VHC04FS(EL)
IC211	8-759-079-61	s	IC TC74VHC74FS(EL)
IC212	8-759-079-61	s	IC TC74VHC74FS(EL)
IC213	8-759-186-54	s	IC TC74VHC164F
IC214	8-759-080-02	s	IC TC74VHC541FS(EL)
IC215	8-759-080-02	s	IC TC74VHC541FS(EL)
IC216	8-759-438-84	s	IC CXD9025R
IC302	8-759-375-21	s	IC CXD8974AR
IC307	8-759-296-10	s	IC UPD4516821G5-A12-7JF
IC309	8-759-296-10	s	IC UPD4516821G5-A12-7JF
IC310	8-759-389-33	s	IC 74LCX244MTCX
IC311	8-759-296-10	s	IC UPD4516821G5-A12-7JF
IC312	8-759-389-32	s	IC 74LCX240MTCX
IC313	8-759-296-10	s	IC UPD4516821G5-A12-7JF
IC401	8-759-167-20	s	IC UPD42280GU-30
IC402	8-759-167-20	s	IC UPD42280GU-30
IC403	8-759-080-06	s	IC TC74VHC574FS(EL)
IC404	8-759-080-06	s	IC TC74VHC574FS(EL)
IC405	8-759-390-96	s	IC CXD8946Q
IC406	8-759-079-46	s	IC TC74VHC00FS(EL)
IC407	8-759-080-02	s	IC TC74VHC541FS(EL)
IC408	8-759-080-02	s	IC TC74VHC541FS(EL)
IC409	8-759-389-66	s	IC UPD4516161G5-A12-7JF
IC411	8-759-196-93	s	IC TC7SH00FU-TE85R
IC501	8-759-080-02	s	IC TC74VHC541FS(EL)
IC502	8-759-080-02	s	IC TC74VHC541FS(EL)
IC504	8-759-449-09	s	IC CXD8945BR
IC505	8-759-296-10	s	IC UPD4516821G5-A12-7JF
IC506	8-759-080-02	s	IC TC74VHC541FS(EL)
IC507	8-759-296-10	s	IC UPD4516821G5-A12-7JF

(DVP-2 BOARD)

Ref. No. or Q'ty	Part No.	SP	Description
IC508	8-759-196-93	s	IC TC7SH00FU-TE85R
IC601	8-759-434-09	s	IC CXD9012R
IC602	8-759-451-72	s	IC CXD9040M
IC608	8-759-447-02	s	IC MN4SV17160T-A12
IC609	8-759-447-02	s	IC MN4SV17160T-A12
L401	1-410-803-11	s	INDUCTOR, CHIP 47nH
Q101	8-729-029-14	s	TRANSISTOR DTC144EUA-T106
Q102	8-729-029-14	s	TRANSISTOR DTC144EUA-T106
Q106	8-729-029-14	s	TRANSISTOR DTC144EUA-T106
Q107	8-729-029-14	s	TRANSISTOR DTC144EUA-T106
Q108	8-729-029-14	s	TRANSISTOR DTC144EUA-T106
R102-106	1-216-845-11	s	METAL, CHIP 100K 5% 1/16W
R109	1-216-805-11	s	METAL, CHIP 47 5% 1/16W
R110	1-216-845-11	s	METAL, CHIP 100K 5% 1/16W
R116	1-216-864-11	s	METAL, CHIP 0 5% 1/16W
R117	1-216-809-11	s	METAL, CHIP 100 5% 1/16W
R118	1-216-845-11	s	METAL, CHIP 100K 5% 1/16W
R120	1-216-864-11	s	METAL, CHIP 0 5% 1/16W
R122	1-216-864-11	s	METAL, CHIP 0 5% 1/16W
R124	1-216-864-11	s	METAL, CHIP 0 5% 1/16W
R126	1-216-864-11	s	METAL, CHIP 0 5% 1/16W
R128	1-216-864-11	s	METAL, CHIP 0 5% 1/16W
R130	1-216-864-11	s	METAL, CHIP 0 5% 1/16W
R133	1-216-864-11	s	METAL, CHIP 0 5% 1/16W
R134	1-216-864-11	s	METAL, CHIP 0 5% 1/16W
R138	1-216-864-11	s	METAL, CHIP 0 5% 1/16W
R141	1-218-899-11	s	METAL, CHIP 150K 0.5% 1/16W
R142	1-218-899-11	s	METAL, CHIP 150K 0.5% 1/16W
R145	1-216-864-11	s	METAL, CHIP 0 5% 1/16W
R149	1-216-864-11	s	METAL, CHIP 0 5% 1/16W
R150	1-216-809-11	s	METAL, CHIP 100 5% 1/16W
R151	1-216-809-11	s	METAL, CHIP 100 5% 1/16W
R152	1-211-969-11	s	METAL, CHIP 10 0.5% 1/16W
R153	1-216-864-11	s	METAL, CHIP 0 5% 1/16W
R200	1-216-845-11	s	METAL, CHIP 100K 5% 1/16W
R209	1-218-692-11	s	METAL, CHIP 1K 0.50% 1/16W
R210	1-218-692-11	s	METAL, CHIP 1K 0.50% 1/16W
R211	1-216-864-11	s	METAL, CHIP 0 5% 1/16W
R214	1-218-679-91	s	METAL, CHIP 300 0.50% 1/16W
R215	1-218-679-91	s	METAL, CHIP 300 0.50% 1/16W
R216	1-216-833-11	s	METAL, CHIP 10K 5% 1/16W
R217	1-218-679-91	s	METAL, CHIP 300 0.50% 1/16W
R231	1-216-864-11	s	METAL, CHIP 0 5% 1/16W
R316	1-218-692-11	s	METAL, CHIP 1K 0.50% 1/16W
R317	1-218-692-11	s	METAL, CHIP 1K 0.50% 1/16W
R322	1-218-679-91	s	METAL, CHIP 300 0.50% 1/16W
R323	1-216-833-11	s	METAL, CHIP 10K 5% 1/16W
R326	1-218-679-91	s	METAL, CHIP 300 0.50% 1/16W
R327	1-216-864-11	s	METAL, CHIP 0 5% 1/16W
R328	1-216-864-11	s	METAL, CHIP 0 5% 1/16W
R413	1-216-845-11	s	METAL, CHIP 100K 5% 1/16W
R414	1-216-805-11	s	METAL, CHIP 47 5% 1/16W
R415	1-216-805-11	s	METAL, CHIP 47 5% 1/16W
R416	1-216-805-11	s	METAL, CHIP 47 5% 1/16W
R417	1-216-805-11	s	METAL, CHIP 47 5% 1/16W
R421	1-216-827-11	s	METAL, CHIP 3.3K 5% 1/16W
R501	1-216-845-11	s	METAL, CHIP 100K 5% 1/16W
R502	1-216-845-11	s	METAL, CHIP 100K 5% 1/16W

(DVP-2 BOARD)

Ref. No. or Q'ty	Part No.	SP	Description
R517	1-216-809-11	s	METAL, CHIP 100 5% 1/16W
R518	1-216-809-11	s	METAL, CHIP 100 5% 1/16W
R519	1-218-679-91	s	METAL, CHIP 300 0.50% 1/16W
R601	1-218-692-11	s	METAL, CHIP 1K 0.50% 1/16W
R602	1-218-692-11	s	METAL, CHIP 1K 0.50% 1/16W
R603	1-218-679-91	s	METAL, CHIP 300 0.50% 1/16W
R604	1-216-833-11	s	METAL, CHIP 10K 5% 1/16W
R611	1-218-679-91	s	METAL, CHIP 300 0.50% 1/16W
RB101	1-239-409-11	s	NETWORK RESISTOR (CHIP) 47
RB102	1-239-409-11	s	NETWORK RESISTOR (CHIP) 47
RB103	1-239-409-11	s	NETWORK RESISTOR (CHIP) 47
RB104	1-239-309-11	s	RESISTOR BLOCK, CHIP 100kx8
RB105	1-236-907-11	s	NETWORK RESISTOR (CHIP) 100K
RB106	1-239-309-11	s	RESISTOR BLOCK, CHIP 100kx8
RB107	1-239-309-11	s	RESISTOR BLOCK, CHIP 100kx8
RB108-112	1-239-412-11	s	NETWORK RESISTOR (CHIP) 100
RB113	1-239-309-11	s	RESISTOR BLOCK, CHIP 100kx8
RB114	1-239-309-11	s	RESISTOR BLOCK, CHIP 100kx8
RB115	1-239-309-11	s	RESISTOR BLOCK, CHIP 100kx8
RB201	1-239-412-11	s	NETWORK RESISTOR (CHIP) 100
RB202	1-236-907-11	s	NETWORK RESISTOR (CHIP) 100K
RB203	1-239-309-11	s	RESISTOR BLOCK, CHIP 100kx8
RB204	1-239-309-11	s	RESISTOR BLOCK, CHIP 100kx8
RB501	1-239-309-11	s	RESISTOR BLOCK, CHIP 100kx8
RB502	1-239-412-11	s	NETWORK RESISTOR (CHIP) 100
S401	1-692-881-41	s	SWITCH, SLIDE

ES-11/11(P) BOARD * For DNW-7/7P/90/90P/90WS/90WSP only

Ref. No. or Q'ty	Part No.	SP	Description
1pc	A-8277-777-A	o	MOUNTED CIRCUIT BOARD, ES-11(N) [For UC, J]
	A-8277-810-A	o	MOUNTED CIRCUIT BOARD, ES-11(P) [For EK]
C2	1-162-920-11	s	CERAMIC, CHIP 27PF 5% 50V
C3	1-135-149-21	s	TANTALUM, CHIP 2.2uF 10% 10V
C4	1-135-149-21	s	TANTALUM, CHIP 2.2uF 10% 10V
C6	1-162-905-11	s	CERAMIC, CHIP 1PF 50V
C7	1-162-908-11	s	CERAMIC, CHIP 3PF 50V
C8	1-164-156-11	s	CERAMIC, CHIP 0.1uF 25V
C9	1-164-156-11	s	CERAMIC, CHIP 0.1uF 25V
C10	1-135-145-11	s	TANTALUM, CHIP 0.47uF 10% 35V
C11	1-135-145-11	s	TANTALUM, CHIP 0.47uF 10% 35V
C12	1-135-145-11	s	TANTALUM, CHIP 0.47uF 10% 35V
C13	1-135-145-11	s	TANTALUM, CHIP 0.47uF 10% 35V
C14	1-162-921-11	s	CERAMIC, CHIP 33PF 5% 50V [For UC, J]
	1-162-926-11	s	CERAMIC, CHIP 82PF 5% 50V [For EK]
C15	1-164-156-11	s	CERAMIC, CHIP 0.1uF 25V
C16	1-104-913-11	s	TANTALUM, CHIP 10uF 20% 16V
C17	1-104-913-11	s	TANTALUM, CHIP 10uF 20% 16V
C18	1-164-156-11	s	CERAMIC, CHIP 0.1uF 25V
C19	1-164-156-11	s	CERAMIC, CHIP 0.1uF 25V
C20	1-135-177-21	s	TANTALUM, CHIP 1uF 10% 25V
C23	1-104-823-11	s	TANTALUM, CHIP 47uF 20% 16V
C24	1-104-823-11	s	TANTALUM, CHIP 47uF 20% 16V
C25	1-113-994-11	s	TANTALUM, CHIP 6.8uF 20% 16V
C26	1-164-156-11	s	CERAMIC, CHIP 0.1uF 25V
C28	1-162-920-11	s	CERAMIC, CHIP 27PF 5% 50V
C29	1-135-177-21	s	TANTALUM, CHIP 1uF 10% 25V
C30	1-107-826-11	s	CERAMIC, CHIP 0.1uF 10% 16V
C33	1-162-908-11	s	CERAMIC, CHIP 3PF 50V
C34	1-164-156-11	s	CERAMIC, CHIP 0.1uF 25V
C35	1-164-156-11	s	CERAMIC, CHIP 0.1uF 25V
C36	1-135-145-11	s	TANTALUM, CHIP 0.47uF 10% 35V
C37	1-135-145-11	s	TANTALUM, CHIP 0.47uF 10% 35V
C38	1-135-145-11	s	TANTALUM, CHIP 0.47uF 10% 35V
C39	1-135-145-11	s	TANTALUM, CHIP 0.47uF 10% 35V
C41	1-164-156-11	s	CERAMIC, CHIP 0.1uF 25V
C42	1-164-156-11	s	CERAMIC, CHIP 0.1uF 25V
C43	1-164-156-11	s	CERAMIC, CHIP 0.1uF 25V
C45	1-162-907-11	s	CERAMIC, CHIP 2PF 50V
C46	1-110-569-11	s	TANTALUM, CHIP 47uF 20% 6.3V
C47	1-162-910-11	s	CERAMIC, CHIP 5PF 50V
C48	1-164-156-11	s	CERAMIC, CHIP 0.1uF 25V
C49	1-164-156-11	s	CERAMIC, CHIP 0.1uF 25V
C50	1-164-156-11	s	CERAMIC, CHIP 0.1uF 25V
C51	1-164-156-11	s	CERAMIC, CHIP 0.1uF 25V
C52	1-113-994-11	s	TANTALUM, CHIP 6.8uF 20% 16V
C53	1-164-156-11	s	CERAMIC, CHIP 0.1uF 25V
C54	1-162-919-11	s	CERAMIC, CHIP 22PF 5% 50V
C55	1-164-156-11	s	CERAMIC, CHIP 0.1uF 25V
C58	1-162-920-11	s	CERAMIC, CHIP 27PF 5% 50V
C59	1-135-091-00	s	TANTALUN, CHIP 1uF 10% 16V
C60	1-162-923-11	s	CERAMIC, CHIP 47PF 5% 50V [For EK]
C61	1-162-919-11	s	CERAMIC, CHIP 22PF 5% 50V

http://getMANUAL.com

(ES-11/11(P) BOARD)

Ref. No. or Q'ty	Part No.	SP	Description
C62	1-113-994-11	s	TANTALUM, CHIP 6.8uF 20% 16V
C63	1-164-156-11	s	CERAMIC, CHIP 0.1uF 25V
C64	1-164-156-11	s	CERAMIC, CHIP 0.1uF 25V
C65	1-162-915-11	s	CERAMIC, CHIP 10PF 50V [For UC, J]
C66	1-135-149-21	s	TANTALUM, CHIP 2.2uF 10% 10V
C67	1-107-686-11	s	TANTALUM, CHIP 4.7uF 20% 16V
C68	1-107-686-11	s	TANTALUM, CHIP 4.7uF 20% 16V
C69	1-104-823-11	s	TANTALUM, CHIP 47uF 20% 16V
C70	1-104-823-11	s	TANTALUM, CHIP 47uF 20% 16V
C71	1-113-985-11	s	TANTALUM, CHIP 10uF 20% 20V
C72	1-113-994-11	s	TANTALUM, CHIP 6.8uF 20% 16V
C73	1-107-686-11	s	TANTALUM, CHIP 4.7uF 20% 16V [For EK]
C74	1-162-970-11	s	CERAMIC, CHIP 0.01uF 10% 25V
C75	1-162-970-11	s	CERAMIC, CHIP 0.01uF 10% 25V
C77	1-164-156-11	s	CERAMIC, CHIP 0.1uF 25V
C78	1-113-994-11	s	TANTALUM, CHIP 6.8uF 20% 16V
C79	1-164-156-11	s	CERAMIC, CHIP 0.1uF 25V
C80	1-164-156-11	s	CERAMIC, CHIP 0.1uF 25V
C81	1-164-156-11	s	CERAMIC, CHIP 0.1uF 25V
C85	1-162-920-11	s	CERAMIC, CHIP 27PF 5% 50V
C86	1-107-826-11	s	CERAMIC, CHIP 0.1uF 10% 16V
C87	1-162-957-11	s	CERAMIC, CHIP 220PF 5% 50V
C88	1-162-915-11	s	CERAMIC, CHIP 10PF 50V [For UC, J]
C89	1-113-994-11	s	TANTALUM, CHIP 6.8uF 20% 16V
C90	1-164-156-11	s	CERAMIC, CHIP 0.1uF 25V
C91	1-164-156-11	s	CERAMIC, CHIP 0.1uF 25V
C92	1-107-826-11	s	CERAMIC, CHIP 0.1uF 10% 16V
C93	1-135-149-21	s	TANTALUM, CHIP 2.2uF 10% 10V
C94	1-107-686-11	s	TANTALUM, CHIP 4.7uF 20% 16V
C95	1-107-686-11	s	TANTALUM, CHIP 4.7uF 20% 16V
C97	1-107-686-11	s	TANTALUM, CHIP 4.7uF 20% 16V
C98	1-113-994-11	s	TANTALUM, CHIP 6.8uF 20% 16V
C99	1-164-156-11	s	CERAMIC, CHIP 0.1uF 25V
C100	1-162-919-11	s	CERAMIC, CHIP 22PF 5% 50V
C101	1-135-210-11	s	TANTALUM, CHIP 4.7uF 20% 10V
C102	1-162-923-11	s	CERAMIC, CHIP 47PF 5% 50V
C103	1-107-686-11	s	TANTALUM, CHIP 4.7uF 20% 16V
C104	1-164-156-11	s	CERAMIC, CHIP 0.1uF 25V
C105	1-162-915-11	s	CERAMIC, CHIP 10PF 50V
C107	1-164-156-11	s	CERAMIC, CHIP 0.1uF 25V
C108	1-164-156-11	s	CERAMIC, CHIP 0.1uF 25V
C109	1-164-156-11	s	CERAMIC, CHIP 0.1uF 25V
C110	1-162-927-11	s	CERAMIC, CHIP 100PF 5% 50V [For UC, J]
	1-162-924-11	s	CERAMIC 56PF 5% 50V [For EK]
C111	1-164-156-11	s	CERAMIC, CHIP 0.1uF 25V
C114	1-164-156-11	s	CERAMIC, CHIP 0.1uF 25V
C115	1-164-156-11	s	CERAMIC, CHIP 0.1uF 25V
C116	1-162-923-11	s	CERAMIC, CHIP 47PF 5% 50V [For EK]
C117	1-162-919-11	s	CERAMIC, CHIP 22PF 5% 50V
C118	1-162-923-11	s	CERAMIC, CHIP 47PF 5% 50V
C119	1-162-921-11	s	CERAMIC, CHIP 33PF 5% 50V
C120	1-164-156-11	s	CERAMIC, CHIP 0.1uF 25V
C121	1-104-823-11	s	TANTALUM, CHIP 47uF 20% 16V
C122	1-164-156-11	s	CERAMIC, CHIP 0.1uF 25V
C123	1-164-156-11	s	CERAMIC, CHIP 0.1uF 25V
C124	1-104-823-11	s	TANTALUM, CHIP 47uF 20% 16V

(ES-11/11(P) BOARD)

Ref. No. or Q'ty	Part No.	SP	Description
C125	1-113-985-11	s	TANTALUM, CHIP 10uF 20% 20V
C126	1-164-156-11	s	CERAMIC, CHIP 0.1uF 25V
C127	1-164-156-11	s	CERAMIC, CHIP 0.1uF 25V
C128	1-135-091-00	s	TANTALUN, CHIP 1uF 10% 16V
C129	1-107-826-11	s	CERAMIC, CHIP 0.1uF 10% 16V
C130	1-164-217-11	s	CERAMIC, CHIP 150PF 5% 50V
C131	1-164-156-11	s	CERAMIC, CHIP 0.1uF 25V
C132	1-165-176-11	s	CERAMIC 0.047uF 10% 16V
C133	1-135-091-00	s	TANTALUN, CHIP 1uF 10% 16V
C134	1-164-156-11	s	CERAMIC, CHIP 0.1uF 25V
C135	1-164-156-11	s	CERAMIC, CHIP 0.1uF 25V
C136	1-164-156-11	s	CERAMIC, CHIP 0.1uF 25V
C137	1-162-964-11	s	CERAMIC, CHIP 0.001uF 10% 50V
C138	1-162-964-11	s	CERAMIC, CHIP 0.001uF 10% 50V
C139	1-162-927-11	s	CERAMIC, CHIP 100PF 5% 50V
C140	1-162-918-11	s	CERAMIC, CHIP 18PF 5% 50V
C140	1-162-918-11	s	CERAMIC, CHIP 18PF 5% 50V
C141	1-164-156-11	s	CERAMIC, CHIP 0.1uF 25V
C142	1-164-156-11	s	CERAMIC, CHIP 0.1uF 25V
C143	1-107-826-11	s	CERAMIC, CHIP 0.1uF 10% 16V
C144	1-107-686-11	s	TANTALUM, CHIP 4.7uF 20% 16V
C145	1-162-918-11	s	CERAMIC, CHIP 18PF 5% 50V
C146	1-162-970-11	s	CERAMIC, CHIP 0.01uF 10% 25V
C147	1-107-826-11	s	CERAMIC, CHIP 0.1uF 10% 16V
C148	1-107-686-11	s	TANTALUM, CHIP 4.7uF 20% 16V
C149	1-162-919-11	s	CERAMIC, CHIP 22PF 5% 50V [For UC, J]
	1-162-918-11	s	CERAMIC, CHIP 18PF 5% 50V [For EK]
C150	1-165-176-11	s	CERAMIC 0.047uF 10% 16V
C151	1-107-686-11	s	TANTALUM, CHIP 4.7uF 20% 16V
C152	1-164-156-11	s	CERAMIC, CHIP 0.1uF 25V
C153	1-164-156-11	s	CERAMIC, CHIP 0.1uF 25V
C154	1-135-211-11	s	TANTALUM, CHIP 6.8uF 20% 6.3V
C155-167	1-164-156-11	s	CERAMIC, CHIP 0.1uF 25V
C168	1-104-823-11	s	TANTALUM, CHIP 47uF 20% 16V
C169	1-104-823-11	s	TANTALUM, CHIP 47uF 20% 16V
C170-179	1-164-156-11	s	CERAMIC, CHIP 0.1uF 25V
C182	1-107-686-11	s	TANTALUM, CHIP 4.7uF 20% 16V
C183	1-162-919-11	s	CERAMIC, CHIP 22PF 5% 50V
C184	1-162-919-11	s	CERAMIC, CHIP 22PF 5% 50V
C185	1-162-919-11	s	CERAMIC, CHIP 22PF 5% 50V
C186	1-162-919-11	s	CERAMIC, CHIP 22PF 5% 50V
C187	1-162-915-11	s	CERAMIC, CHIP 10PF 50V
C189	1-162-915-11	s	CERAMIC, CHIP 10PF 50V
C191	1-162-915-11	s	CERAMIC, CHIP 10PF 50V
C193	1-162-915-11	s	CERAMIC, CHIP 10PF 50V
C195	1-113-985-11	s	TANTALUM, CHIP 10uF 20% 20V
C196	1-162-920-11	s	CERAMIC, CHIP 27PF 5% 50V
CN1	1-568-358-11	s	CONNECTOR, BOARD TO BOARD 18P
CN2	1-568-358-11	s	CONNECTOR, BOARD TO BOARD 18P
CN3	1-568-358-11	s	CONNECTOR, BOARD TO BOARD 18P
CP1	1-579-716-11	s	VCO, CRYSTAL 14.318180MHz [For UC, J]
	1-579-718-11	s	VCO, CRYSTAL 17.734000MHz [For EK]
D1	8-719-948-47	s	DIODE HSM88AS
D2	8-719-948-47	s	DIODE HSM88AS
D3	8-719-948-47	s	DIODE HSM88AS

(ES-11/11(P) BOARD)

Ref. No. or Q'ty	Part No.	SP	Description
D4-8	8-719-820-41	s	DIODE 1SS302
D9	8-719-948-47	s	DIODE HSM88AS
D13	8-719-820-41	s	DIODE 1SS302 [For UC, J]
DL1	1-411-271-21	s	DELAY LINE 155ns
DL2	1-411-272-21	s	DELAY LINE 185ns
FL1	1-233-740-11	s	FILTER, LOW-PASS
FL2	1-233-742-11	s	FILTER, LOW-PASS
FL3	1-239-528-21	s	FILTER, LOW-PASS (NTSC BLANKING) [For UC, J]
	1-239-527-21	s	FILTER, LOW-PASS (PAL BLANKING) [For EK]
FL4	1-239-383-12	s	FILTER, LOW-PASS (NTSC SYNC) [For UC, J]
	1-239-381-21	s	FILTER, LOW-PASS (PAL SYNC) [For EK]
FL5	1-233-740-11	s	FILTER, LOW-PASS
FL6	1-233-742-11	s	FILTER, LOW-PASS
FL7	1-233-737-11	s	FILTER, BANDPASS 3.58MHz [For UC, J]
	1-233-738-11	s	FILTER, BANDPASS 4.43MHz [For EK]
FL8	1-239-383-12	s	FILTER, LOW-PASS (NTSC SYNC) [For UC, J]
	1-239-381-21	s	FILTER, LOW-PASS (PAL SYNC) [For EK]
FL9	1-233-740-11	s	FILTER, LOW-PASS
FL10	1-233-742-11	s	FILTER, LOW-PASS
FL11	1-239-382-22	s	FILTER, LOW-PASS (U/V)
FL12	1-402-647-11	s	DELAY LINE (NTSC) 90deg [For UC, J]
	1-402-646-21	s	DELAY LINE (PAL) 90deg [For EK]
FL13	1-239-375-21	s	FILTER, LOW-PASS
FL14	1-233-740-11	s	FILTER, LOW-PASS
FL15	1-233-742-11	s	FILTER, LOW-PASS
FL16	1-239-382-22	s	FILTER, LOW-PASS (U/V)
FL17	1-239-371-21	s	FILTER, BANDPASS 3.58MHz [For UC, J]
	1-239-374-11	s	FILTER, BANDPASS 4.43MHz [For EK]
FL18	1-239-375-21	s	FILTER, LOW-PASS
IC1	8-759-082-61	s	IC TC4W53FU
IC2	8-759-173-16	s	IC TL062CPW
IC3	8-759-271-86	s	IC TC7SH04FU
IC4	8-759-271-86	s	IC TC7SH04FU
IC5	8-759-082-61	s	IC TC4W53FU
IC6	8-759-066-59	s	IC TC74HC4053AFS
IC7	8-759-271-86	s	IC TC7SH04FU
IC8	8-759-079-51	s	IC TC74VHCU04FS(EL)
IC9	8-759-082-61	s	IC TC4W53FU
IC10	8-759-906-59	s	IC CX22017
IC11	8-759-271-86	s	IC TC7SH04FU
IC12	8-759-254-49	s	IC EL4581CS-TE2
IC13	8-759-295-09	s	IC TLC2932IPW [For UC, J]
IC14	8-759-049-58	s	IC SN74HC04APW-E05
IC15	8-759-050-10	s	IC SN74HC163APW-E05 [For UC, J]
IC16	8-759-050-10	s	IC SN74HC163APW-E05 [For UC, J]
IC17	8-759-050-10	s	IC SN74HC163APW-E05 [For UC, J]
IC18	8-759-082-59	s	IC TC7W32FU
IC19	8-759-086-41	s	IC X24C02S-3.0
IC20	8-759-635-27	s	IC M62352GP
IC21	8-759-347-09	s	IC NJU7034V-TE2
IC22	8-759-180-08	s	IC TC74HC4538AFS

(ES-11/11(P) BOARD)

Ref. No. or Q'ty	Part No.	SP	Description
IC23	8-752-335-47	s	IC CXD1216M
IC24	8-759-082-61	s	IC TC4W53FU
IC25	8-759-066-59	s	IC TC74HC4053AFS
IC26	8-759-159-52	s	IC NJU7024M
IC27	8-752-332-67	s	IC CXD1217M
IC28	8-759-902-88	s	IC SN74LS123NS
IC29	8-759-035-93	s	IC TC7S32F-TE85L
IC30	8-759-082-58	s	IC TC7W08FU
IC31	8-759-635-27	s	IC M62352GP
IC32	8-759-271-86	s	IC TC7SH04FU
IC33	8-759-082-61	s	IC TC4W53FU
IC34	8-759-082-61	s	IC TC4W53FU
IC35	8-759-256-90	s	IC NJU7021V-TE2
IC36	8-759-083-94	s	IC TC7W74FU
IC37	8-759-082-61	s	IC TC4W53FU
IC38	8-759-082-61	s	IC TC4W53FU
IC39	8-759-062-66	s	IC TC7S66F
IC40	8-759-271-86	s	IC TC7SH04FU
IC41	8-759-082-61	s	IC TC4W53FU
IC42	8-759-196-96	s	IC TC7SH08FU-TE85R
JR1	1-216-864-11	s	METAL, CHIP 0 5% 1/16W [For UC, J]
JR2	1-216-864-11	s	METAL, CHIP 0 5% 1/16W [For EK]
JR3	1-216-864-11	s	METAL, CHIP 0 5% 1/16W [For EK]
JR4	1-216-864-11	s	METAL, CHIP 0 5% 1/16W [For UC, J]
L2	1-412-951-11	s	INDUCTOR 10uH
L5	1-410-373-31	s	INDUCTOR, CHIP 2.2uH
L6	1-410-373-31	s	INDUCTOR, CHIP 2.2uH
L7	1-412-955-11	s	INDUCTOR 22uH
L8	1-412-959-11	s	INDUCTOR 47uH
L10	1-410-373-31	s	INDUCTOR, CHIP 2.2uH
Q1	8-729-017-10	s	TRANSISTOR 2SJ244JY-TL
Q2	8-729-022-32	s	TRANSISTOR 2SK1579DY-TL
Q3	8-729-403-32	s	TRANSISTOR XN6534
Q4	8-729-403-29	s	TRANSISTOR XN6435
Q5	8-729-117-32	s	TRANSISTOR 2SC4177
Q6	8-729-403-32	s	TRANSISTOR XN6534
Q7	8-729-403-29	s	TRANSISTOR XN6435
Q8	8-729-109-44	s	TRANSISTOR 2SK94
Q9	8-729-403-32	s	TRANSISTOR XN6534
Q10	8-729-403-29	s	TRANSISTOR XN6435
Q11	8-729-403-32	s	TRANSISTOR XN6534
Q12	8-729-402-19	s	TRANSISTOR XN6501
Q13	8-729-403-32	s	TRANSISTOR XN6534
Q14	8-729-403-32	s	TRANSISTOR XN6534
Q15	8-729-402-19	s	TRANSISTOR XN6501
Q16	8-729-403-29	s	TRANSISTOR XN6435
Q17	8-729-402-19	s	TRANSISTOR XN6501
Q18	8-729-402-19	s	TRANSISTOR XN6501
Q19	8-729-140-63	s	TRANSISTOR 2SA1611-M5M6
Q20	8-729-403-32	s	TRANSISTOR XN6534
Q21	8-729-403-29	s	TRANSISTOR XN6435
Q22	8-729-117-32	s	TRANSISTOR 2SC4177
Q23	8-729-403-32	s	TRANSISTOR XN6534
Q24	8-729-403-29	s	TRANSISTOR XN6435
Q25	8-729-109-44	s	TRANSISTOR 2SK94
Q26	8-729-403-32	s	TRANSISTOR XN6534
Q27	8-729-403-29	s	TRANSISTOR XN6435
Q28	8-729-403-32	s	TRANSISTOR XN6534

(ES-11/11(P) BOARD)

Ref. No. or Q'ty	Part No.	SP	Description
Q29	8-729-403-29	s	TRANSISTOR XN6435
Q30	8-729-403-32	s	TRANSISTOR XN6534
Q31	8-729-403-32	s	TRANSISTOR XN6534
Q32	8-729-402-19	s	TRANSISTOR XN6501
Q33	8-729-403-29	s	TRANSISTOR XN6435
Q34	8-729-403-32	s	TRANSISTOR XN6534
Q35	8-729-403-32	s	TRANSISTOR XN6534
Q36	8-729-403-29	s	TRANSISTOR XN6435
Q37	8-729-117-32	s	TRANSISTOR 2SC4177
Q38	8-729-109-44	s	TRANSISTOR 2SK94
Q39	8-729-403-29	s	TRANSISTOR XN6435
Q40	8-729-403-32	s	TRANSISTOR XN6534
Q41	8-729-402-19	s	TRANSISTOR XN6501
Q42	8-729-122-63	s	TRANSISTOR 2SA1226
Q43	8-729-403-29	s	TRANSISTOR XN6435
Q44	8-729-403-32	s	TRANSISTOR XN6534
Q45	8-729-402-19	s	TRANSISTOR XN6501
Q46	8-729-402-19	s	TRANSISTOR XN6501
Q47	8-729-403-32	s	TRANSISTOR XN6534
Q48	8-729-403-29	s	TRANSISTOR XN6435
Q49	8-729-117-32	s	TRANSISTOR 2SC4177
Q50	8-729-109-44	s	TRANSISTOR 2SK94
Q51	8-729-403-29	s	TRANSISTOR XN6435
Q52	8-729-403-32	s	TRANSISTOR XN6534
Q53	8-729-402-19	s	TRANSISTOR XN6501
Q54	8-729-122-63	s	TRANSISTOR 2SA1226
Q55	8-729-141-48	s	TRANSISTOR 2SB624-BV345
Q56	8-729-402-19	s	TRANSISTOR XN6501
Q57	8-729-403-29	s	TRANSISTOR XN6435
Q58	8-729-403-32	s	TRANSISTOR XN6534
Q59	8-729-117-32	s	TRANSISTOR 2SC4177
Q60	8-729-403-32	s	TRANSISTOR XN6534
Q61	8-729-403-29	s	TRANSISTOR XN6435
Q62	8-729-117-32	s	TRANSISTOR 2SC4177
Q63	8-729-117-32	s	TRANSISTOR 2SC4177
Q64	8-729-122-63	s	TRANSISTOR 2SA1226
Q65	8-729-117-73	s	TRANSISTOR 2SC4178-F14
Q66	8-729-403-29	s	TRANSISTOR XN6435
Q67	8-729-117-32	s	TRANSISTOR 2SC4177
Q68	8-729-403-29	s	TRANSISTOR XN6435
Q69	8-729-402-19	s	TRANSISTOR XN6501
Q70	8-729-117-32	s	TRANSISTOR 2SC4177
Q71	8-729-140-63	s	TRANSISTOR 2SA1611-M5M6
Q72	8-729-141-48	s	TRANSISTOR 2SB624-BV345
Q73	8-729-117-32	s	TRANSISTOR 2SC4177
Q74	8-729-028-91	s	TRANSISTOR DTA144EUA-T106
Q75	8-729-904-54	s	TRANSISTOR DTB143EK
Q76	8-729-904-72	s	TRANSISTOR DTD143EK
Q77	8-729-017-10	s	TRANSISTOR 2SJ244JY-TL
Q78	8-729-140-63	s	TRANSISTOR 2SA1611-M5M6
R1	1-218-668-11	s	METAL, CHIP 100 0.50% 1/16W
R2	1-218-652-11	s	METAL, CHIP 22 0.50% 1/16W
R3	1-218-652-11	s	METAL, CHIP 22 0.50% 1/16W
R4	1-218-672-11	s	METAL, CHIP 150 0.50% 1/16W
R5	1-218-696-11	s	METAL, CHIP 1.5K 0.50% 1/16W
R6	1-218-696-11	s	METAL, CHIP 1.5K 0.50% 1/16W
R7	1-218-692-11	s	METAL, CHIP 1K 0.50% 1/16W
R8	1-218-684-11	s	METAL, CHIP 470 0.50% 1/16W
R10	1-218-708-11	s	METAL, CHIP 4.7K 0.50% 1/16W

(ES-11/11(P) BOARD)

Ref. No. or Q'ty	Part No.	SP	Description
R11	1-218-692-11	s	METAL, CHIP 1K 0.50% 1/16W
R12	1-218-652-11	s	METAL, CHIP 22 0.50% 1/16W
R13	1-218-684-11	s	METAL, CHIP 470 0.50% 1/16W
R14	1-218-652-11	s	METAL, CHIP 22 0.50% 1/16W
R15	1-218-714-11	s	METAL, CHIP 8.2K 0.50% 1/16W
R16	1-218-714-11	s	METAL, CHIP 8.2K 0.50% 1/16W
R17	1-218-652-11	s	METAL, CHIP 22 0.50% 1/16W
R18	1-218-708-11	s	METAL, CHIP 4.7K 0.50% 1/16W
R19	1-218-694-11	s	METAL, CHIP 1.2K 0.50% 1/16W
R20	1-218-708-11	s	METAL, CHIP 4.7K 0.50% 1/16W
R21	1-218-695-11	s	METAL, CHIP 1.3K 0.50% 1/16W
R22	1-218-706-11	s	METAL, CHIP 3.9K 0.50% 1/16W
R23	1-218-668-11	s	METAL, CHIP 100 0.50% 1/16W
R24	1-218-706-11	s	METAL, CHIP 3.9K 0.50% 1/16W
R25	1-218-712-11	s	METAL, CHIP 6.8K 0.50% 1/16W
R26	1-216-861-11	s	METAL, CHIP 2.2M 5% 1/16W
R27	1-216-861-11	s	METAL, CHIP 2.2M 5% 1/16W
R28	1-218-668-11	s	METAL, CHIP 100 0.50% 1/16W
R29	1-218-740-11	s	METAL, CHIP 100K 0.50% 1/16W
R30	1-218-694-11	s	METAL, CHIP 1.2K 0.50% 1/16W
R31	1-218-723-11	s	METAL, CHIP 20K 0.50% 1/16W
R32	1-218-716-11	s	METAL, CHIP 10K 0.50% 1/16W
R33	1-218-716-11	s	METAL, CHIP 10K 0.50% 1/16W
R34	1-218-652-11	s	METAL, CHIP 22 0.50% 1/16W
R35	1-218-704-11	s	METAL, CHIP 3.3K 0.50% 1/16W
R36	1-218-652-11	s	METAL, CHIP 22 0.50% 1/16W
R37	1-218-652-11	s	METAL, CHIP 22 0.50% 1/16W
R38	1-218-708-11	s	METAL, CHIP 4.7K 0.50% 1/16W
R39	1-218-652-11	s	METAL, CHIP 22 0.50% 1/16W
R40	1-218-652-11	s	METAL, CHIP 22 0.50% 1/16W
R41	1-218-708-11	s	METAL, CHIP 4.7K 0.50% 1/16W
R42	1-218-652-11	s	METAL, CHIP 22 0.50% 1/16W
R43	1-218-726-11	s	METAL, CHIP 27K 0.50% 1/16W
R44	1-218-734-11	s	METAL, CHIP 56K 0.50% 1/16W
R45	1-218-730-11	s	METAL, CHIP 39K 0.50% 1/16W
R46	1-218-724-11	s	METAL, CHIP 22K 0.50% 1/16W
R47	1-218-652-11	s	METAL, CHIP 22 0.50% 1/16W
R48	1-218-730-11	s	METAL, CHIP 39K 0.50% 1/16W
R49	1-218-716-11	s	METAL, CHIP 10K 0.50% 1/16W
R50	1-218-708-11	s	METAL, CHIP 4.7K 0.50% 1/16W
R51	1-216-791-11	s	METAL, CHIP 3.3 5% 1/16W
R52	1-216-791-11	s	METAL, CHIP 3.3 5% 1/16W
R53	1-218-692-11	s	METAL, CHIP 1K 0.50% 1/16W
R54	1-218-683-11	s	METAL, CHIP 430 0.50% 1/16W
R55	1-218-740-11	s	METAL, CHIP 100K 0.50% 1/16W
R56	1-218-712-11	s	METAL, CHIP 6.8K 0.50% 1/16W
R57	1-218-668-11	s	METAL, CHIP 100 0.50% 1/16W
R58	1-218-710-11	s	METAL, CHIP 5.6K 0.50% 1/16W
R59	1-218-714-11	s	METAL, CHIP 8.2K 0.50% 1/16W
R60	1-218-700-11	s	METAL, CHIP 2.2K 0.50% 1/16W
R61	1-218-722-11	s	METAL, CHIP 18K 0.50% 1/16W
R62	1-218-708-11	s	METAL, CHIP 4.7K 0.50% 1/16W
R63	1-218-716-11	s	METAL, CHIP 10K 0.50% 1/16W
R64	1-218-668-11	s	METAL, CHIP 100 0.50% 1/16W
R65	1-218-716-11	s	METAL, CHIP 10K 0.50% 1/16W
R66	1-218-730-11	s	METAL, CHIP 39K 0.50% 1/16W
R67	1-218-700-11	s	METAL, CHIP 2.2K 0.50% 1/16W
R68	1-218-730-11	s	METAL, CHIP 39K 0.50% 1/16W
R69	1-218-716-11	s	METAL, CHIP 10K 0.50% 1/16W

(ES-11/11(P) BOARD)

Ref. No. or Q'ty	Part No.	SP	Description
R70	1-218-722-11	s	METAL, CHIP 18K 0.50% 1/16W
R71	1-218-716-11	s	METAL, CHIP 10K 0.50% 1/16W
R72	1-218-730-11	s	METAL, CHIP 39K 0.50% 1/16W
R73	1-218-708-11	s	METAL, CHIP 4.7K 0.50% 1/16W
R74	1-218-710-11	s	METAL, CHIP 5.6K 0.50% 1/16W
R75	1-218-702-11	s	METAL, CHIP 2.7K 0.50% 1/16W
R76	1-218-716-11	s	METAL, CHIP 10K 0.50% 1/16W
R77	1-218-668-11	s	METAL, CHIP 100 0.50% 1/16W
R78	1-218-672-11	s	METAL, CHIP 150 0.50% 1/16W
R79	1-218-652-11	s	METAL, CHIP 22 0.50% 1/16W
R80	1-218-652-11	s	METAL, CHIP 22 0.50% 1/16W
R81	1-218-696-11	s	METAL, CHIP 1.5K 0.50% 1/16W
R82	1-218-696-11	s	METAL, CHIP 1.5K 0.50% 1/16W
R83	1-218-692-11	s	METAL, CHIP 1K 0.50% 1/16W
R84	1-218-684-11	s	METAL, CHIP 470 0.50% 1/16W
R86	1-218-708-11	s	METAL, CHIP 4.7K 0.50% 1/16W
R87	1-218-692-11	s	METAL, CHIP 1K 0.50% 1/16W
R88	1-218-652-11	s	METAL, CHIP 22 0.50% 1/16W
R89	1-218-684-11	s	METAL, CHIP 470 0.50% 1/16W
R90	1-218-652-11	s	METAL, CHIP 22 0.50% 1/16W
R91	1-218-714-11	s	METAL, CHIP 8.2K 0.50% 1/16W
R92	1-218-714-11	s	METAL, CHIP 8.2K 0.50% 1/16W
R93	1-218-652-11	s	METAL, CHIP 22 0.50% 1/16W
R94	1-218-708-11	s	METAL, CHIP 4.7K 0.50% 1/16W
R95	1-218-694-11	s	METAL, CHIP 1.2K 0.50% 1/16W
R96	1-218-714-11	s	METAL, CHIP 8.2K 0.50% 1/16W
R97	1-218-708-11	s	METAL, CHIP 4.7K 0.50% 1/16W
R98	1-218-706-11	s	METAL, CHIP 3.9K 0.50% 1/16W
R99	1-218-668-11	s	METAL, CHIP 100 0.50% 1/16W
R100	1-218-695-11	s	METAL, CHIP 1.3K 0.50% 1/16W
R101	1-218-706-11	s	METAL, CHIP 3.9K 0.50% 1/16W
R102	1-218-712-11	s	METAL, CHIP 6.8K 0.50% 1/16W
R103	1-216-861-11	s	METAL, CHIP 2.2M 5% 1/16W
R104	1-216-861-11	s	METAL, CHIP 2.2M 5% 1/16W
R105	1-218-740-11	s	METAL, CHIP 100K 0.50% 1/16W
R106	1-218-668-11	s	METAL, CHIP 100 0.50% 1/16W
R107	1-218-716-11	s	METAL, CHIP 10K 0.50% 1/16W
R108	1-218-694-11	s	METAL, CHIP 1.2K 0.50% 1/16W
R109	1-218-723-11	s	METAL, CHIP 20K 0.50% 1/16W
R110	1-218-716-11	s	METAL, CHIP 10K 0.50% 1/16W
R111	1-218-652-11	s	METAL, CHIP 22 0.50% 1/16W
R112	1-218-652-11	s	METAL, CHIP 22 0.50% 1/16W
R113	1-218-704-11	s	METAL, CHIP 3.3K 0.50% 1/16W
R114	1-218-652-11	s	METAL, CHIP 22 0.50% 1/16W
R115	1-218-708-11	s	METAL, CHIP 4.7K 0.50% 1/16W
R116	1-218-652-11	s	METAL, CHIP 22 0.50% 1/16W
R117	1-218-652-11	s	METAL, CHIP 22 0.50% 1/16W
R118	1-218-708-11	s	METAL, CHIP 4.7K 0.50% 1/16W
R119	1-218-652-11	s	METAL, CHIP 22 0.50% 1/16W
R120	1-218-687-11	s	METAL, CHIP 620 0.50% 1/16W
R121	1-218-698-11	s	METAL, CHIP 1.8K 0.50% 1/16W
R122	1-218-685-11	s	METAL, CHIP 510 0.50% 1/16W
R123	1-218-742-11	s	METAL, CHIP 120K 0.50% 1/16W
R124	1-218-708-11	s	METAL, CHIP 4.7K 0.50% 1/16W
R125	1-218-701-11	s	METAL, CHIP 2.4K 0.50% 1/16W
R126	1-218-706-11	s	METAL, CHIP 3.9K 0.50% 1/16W
R127	1-218-708-11	s	METAL, CHIP 4.7K 0.50% 1/16W
R128	1-218-695-11	s	METAL, CHIP 1.3K 0.50% 1/16W
R129	1-218-668-11	s	METAL, CHIP 100 0.50% 1/16W

(ES-11/11(P) BOARD)

Ref. No. or Q'ty	Part No.	SP	Description
R130	1-218-706-11	s	METAL, CHIP 3.9K 0.50% 1/16W
R131	1-218-708-11	s	METAL, CHIP 4.7K 0.50% 1/16W
R132	1-218-700-11	s	METAL, CHIP 2.2K 0.50% 1/16W
R133	1-218-692-11	s	METAL, CHIP 1K 0.50% 1/16W
R134	1-218-691-11	s	METAL, CHIP 910 0.50% 1/16W
R135	1-218-716-11	s	METAL, CHIP 10K 0.50% 1/16W
R136	1-218-668-11	s	METAL, CHIP 100 0.50% 1/16W
R137	1-218-716-11	s	METAL, CHIP 10K 0.50% 1/16W
R138	1-218-730-11	s	METAL, CHIP 39K 0.50% 1/16W
R139	1-218-700-11	s	METAL, CHIP 2.2K 0.50% 1/16W
R140	1-218-722-11	s	METAL, CHIP 18K 0.50% 1/16W
R141	1-218-716-11	s	METAL, CHIP 10K 0.50% 1/16W
R142	1-218-730-11	s	METAL, CHIP 39K 0.50% 1/16W
R143	1-218-716-11	s	METAL, CHIP 10K 0.50% 1/16W
R144	1-218-732-11	s	METAL, CHIP 47K 0.50% 1/16W
R145	1-218-719-11	s	METAL, CHIP 13K 0.50% 1/16W
R146	1-218-724-11	s	METAL, CHIP 22K 0.50% 1/16W
R147	1-218-719-11	s	METAL, CHIP 13K 0.50% 1/16W
R148	1-218-722-11	s	METAL, CHIP 18K 0.50% 1/16W
R149	1-218-740-11	s	METAL, CHIP 100K 0.50% 1/16W
R150	1-218-700-11	s	METAL, CHIP 2.2K 0.50% 1/16W
R151	1-218-706-11	s	METAL, CHIP 3.9K 0.50% 1/16W
R152	1-218-716-11	s	METAL, CHIP 10K 0.50% 1/16W
R153	1-218-713-11	s	METAL, CHIP 7.5K 0.50% 1/16W
R154	1-218-713-11	s	METAL, CHIP 7.5K 0.50% 1/16W
R155	1-218-716-11	s	METAL, CHIP 10K 0.50% 1/16W
R156	1-218-707-11	s	METAL, CHIP 4.3K 0.50% 1/16W
R157	1-218-704-11	s	METAL, CHIP 3.3K 0.50% 1/16W
R158	1-218-660-11	s	METAL, CHIP 47 0.50% 1/16W
R159	1-218-676-11	s	METAL, CHIP 220 0.50% 1/16W
R160	1-218-652-11	s	METAL, CHIP 22 0.50% 1/16W
R161	1-218-652-11	s	METAL, CHIP 22 0.50% 1/16W
R162	1-218-696-11	s	METAL, CHIP 1.5K 0.50% 1/16W
R163	1-218-696-11	s	METAL, CHIP 1.5K 0.50% 1/16W
R164	1-218-692-11	s	METAL, CHIP 1K 0.50% 1/16W
R165	1-218-684-11	s	METAL, CHIP 470 0.50% 1/16W
R167	1-218-708-11	s	METAL, CHIP 4.7K 0.50% 1/16W
R168	1-218-692-11	s	METAL, CHIP 1K 0.50% 1/16W
R169	1-218-652-11	s	METAL, CHIP 22 0.50% 1/16W
R170	1-218-684-11	s	METAL, CHIP 470 0.50% 1/16W
R171	1-218-652-11	s	METAL, CHIP 22 0.50% 1/16W
R172	1-218-714-11	s	METAL, CHIP 8.2K 0.50% 1/16W
R173	1-218-714-11	s	METAL, CHIP 8.2K 0.50% 1/16W
R174	1-218-652-11	s	METAL, CHIP 22 0.50% 1/16W
R175	1-218-644-11	s	METAL, CHIP 10 0.50% 1/16W
R176	1-218-716-11	s	METAL, CHIP 10K 0.50% 1/16W
R177	1-218-708-11	s	METAL, CHIP 4.7K 0.50% 1/16W
R178	1-218-644-11	s	METAL, CHIP 10 0.50% 1/16W
R179	1-218-652-11	s	METAL, CHIP 22 0.50% 1/16W
R180	1-218-708-11	s	METAL, CHIP 4.7K 0.50% 1/16W
R181	1-218-700-11	s	METAL, CHIP 2.2K 0.50% 1/16W
R182	1-218-700-11	s	METAL, CHIP 2.2K 0.50% 1/16W
R183	1-218-652-11	s	METAL, CHIP 22 0.50% 1/16W
R184	1-218-708-11	s	METAL, CHIP 4.7K 0.50% 1/16W
R185	1-218-700-11	s	METAL, CHIP 2.2K 0.50% 1/16W [For UC, J]
	1-218-698-11	s	METAL, CHIP 1.8K 0.50% 1/16W [For EK]
R186	1-218-708-11	s	METAL, CHIP 4.7K 0.50% 1/16W

(ES-11/11(P) BOARD)

Ref. No. or Q'ty	Part No.	SP	Description
R187	1-218-728-11	s	METAL, CHIP 33K 0.50% 1/16W
R188	1-218-726-11	s	METAL, CHIP 27K 0.50% 1/16W [For EK]
R189	1-218-700-11	s	METAL, CHIP 2.2K 0.50% 1/16W
R190	1-218-708-11	s	METAL, CHIP 4.7K 0.50% 1/16W
R191	1-216-864-11	s	METAL, CHIP 0 5% 1/16W
R192	1-218-708-11	s	METAL, CHIP 4.7K 0.50% 1/16W
R193	1-218-692-11	s	METAL, CHIP 1K 0.50% 1/16W
R195	1-218-744-11	s	METAL, CHIP 150K 0.50% 1/16W
R196	1-218-740-11	s	METAL, CHIP 100K 0.50% 1/16W [For UC, J]
R197	1-218-724-11	s	METAL, CHIP 22K 0.50% 1/16W [For EK]
R198	1-218-708-11	s	METAL, CHIP 4.7K 0.50% 1/16W
R199	1-218-708-11	s	METAL, CHIP 4.7K 0.50% 1/16W
R200	1-218-692-11	s	METAL, CHIP 1K 0.50% 1/16W
R201	1-218-692-11	s	METAL, CHIP 1K 0.50% 1/16W
R202	1-218-678-11	s	METAL, CHIP 270 0.50% 1/16W
R203	1-218-700-11	s	METAL, CHIP 2.2K 0.50% 1/16W
R204	1-218-708-11	s	METAL, CHIP 4.7K 0.50% 1/16W
R205	1-218-652-11	s	METAL, CHIP 22 0.50% 1/16W
R206	1-218-696-11	s	METAL, CHIP 1.5K 0.50% 1/16W
R207	1-218-692-11	s	METAL, CHIP 1K 0.50% 1/16W
R208	1-218-710-11	s	METAL, CHIP 5.6K 0.50% 1/16W
R209	1-218-716-11	s	METAL, CHIP 10K 0.50% 1/16W
R210	1-218-668-11	s	METAL, CHIP 100 0.50% 1/16W
R211	1-218-692-11	s	METAL, CHIP 1K 0.50% 1/16W
R212	1-218-692-11	s	METAL, CHIP 1K 0.50% 1/16W
R213	1-218-730-11	s	METAL, CHIP 39K 0.50% 1/16W
R214	1-218-716-11	s	METAL, CHIP 10K 0.50% 1/16W
R215	1-218-716-11	s	METAL, CHIP 10K 0.50% 1/16W
R216	1-218-722-11	s	METAL, CHIP 18K 0.50% 1/16W
R217	1-218-676-11	s	METAL, CHIP 220 0.50% 1/16W
R218	1-218-652-11	s	METAL, CHIP 22 0.50% 1/16W
R219	1-218-652-11	s	METAL, CHIP 22 0.50% 1/16W
R220	1-218-696-11	s	METAL, CHIP 1.5K 0.50% 1/16W
R221	1-218-696-11	s	METAL, CHIP 1.5K 0.50% 1/16W
R222	1-218-692-11	s	METAL, CHIP 1K 0.50% 1/16W
R223	1-218-684-11	s	METAL, CHIP 470 0.50% 1/16W
R225	1-218-708-11	s	METAL, CHIP 4.7K 0.50% 1/16W
R226	1-218-692-11	s	METAL, CHIP 1K 0.50% 1/16W
R227	1-218-652-11	s	METAL, CHIP 22 0.50% 1/16W
R228	1-218-684-11	s	METAL, CHIP 470 0.50% 1/16W
R229	1-218-652-11	s	METAL, CHIP 22 0.50% 1/16W
R230	1-218-714-11	s	METAL, CHIP 8.2K 0.50% 1/16W
R231	1-218-714-11	s	METAL, CHIP 8.2K 0.50% 1/16W
R232	1-218-652-11	s	METAL, CHIP 22 0.50% 1/16W
R233	1-218-716-11	s	METAL, CHIP 10K 0.50% 1/16W
R234	1-218-708-11	s	METAL, CHIP 4.7K 0.50% 1/16W
R235	1-218-644-11	s	METAL, CHIP 10 0.50% 1/16W
R236	1-218-644-11	s	METAL, CHIP 10 0.50% 1/16W
R237	1-218-652-11	s	METAL, CHIP 22 0.50% 1/16W
R238	1-218-708-11	s	METAL, CHIP 4.7K 0.50% 1/16W
R239	1-218-700-11	s	METAL, CHIP 2.2K 0.50% 1/16W
R240	1-218-700-11	s	METAL, CHIP 2.2K 0.50% 1/16W
R241	1-218-652-11	s	METAL, CHIP 22 0.50% 1/16W
R242	1-218-708-11	s	METAL, CHIP 4.7K 0.50% 1/16W
R243	1-218-686-11	s	METAL, CHIP 560 0.50% 1/16W [For UC, J]
	1-218-682-11	s	METAL, CHIP 390 0.50% 1/16W [For EK]

(ES-11/11(P) BOARD)

Ref. No. or Q'ty	Part No.	SP	Description
R244	1-218-660-11	s	METAL, CHIP 47 0.50% 1/16W [For EK]
R245	1-218-708-11	s	METAL, CHIP 4.7K 0.50% 1/16W
R246	1-218-700-11	s	METAL, CHIP 2.2K 0.50% 1/16W
R247	1-218-710-11	s	METAL, CHIP 5.6K 0.50% 1/16W [For UC, J]
	1-218-709-11	s	METAL, CHIP 5.1K 0.50% 1/16W [For EK]
R248	1-218-708-11	s	METAL, CHIP 4.7K 0.50% 1/16W
R249	1-216-864-11	s	METAL, CHIP 0 5% 1/16W
R250	1-218-708-11	s	METAL, CHIP 4.7K 0.50% 1/16W
R251	1-218-692-11	s	METAL, CHIP 1K 0.50% 1/16W
R253	1-218-744-11	s	METAL, CHIP 150K 0.50% 1/16W
R254	1-218-740-11	s	METAL, CHIP 100K 0.50% 1/16W
R255	1-218-716-11	s	METAL, CHIP 10K 0.50% 1/16W
R256	1-218-722-11	s	METAL, CHIP 18K 0.50% 1/16W [For EK]
R257	1-218-692-11	s	METAL, CHIP 1K 0.50% 1/16W [For UC, J]
R258	1-218-668-11	s	METAL, CHIP 100 0.50% 1/16W
R259	1-218-692-11	s	METAL, CHIP 1K 0.50% 1/16W
R260	1-218-692-11	s	METAL, CHIP 1K 0.50% 1/16W
R261	1-218-730-11	s	METAL, CHIP 39K 0.50% 1/16W
R262	1-218-722-11	s	METAL, CHIP 18K 0.50% 1/16W
R263	1-218-716-11	s	METAL, CHIP 10K 0.50% 1/16W
R264	1-218-716-11	s	METAL, CHIP 10K 0.50% 1/16W
R265	1-218-732-11	s	METAL, CHIP 47K 0.50% 1/16W
R266	1-218-722-11	s	METAL, CHIP 18K 0.50% 1/16W
R267	1-218-740-11	s	METAL, CHIP 100K 0.50% 1/16W
R268	1-218-700-11	s	METAL, CHIP 2.2K 0.50% 1/16W
R269	1-218-706-11	s	METAL, CHIP 3.9K 0.50% 1/16W
R270	1-218-716-11	s	METAL, CHIP 10K 0.50% 1/16W
R271	1-218-713-11	s	METAL, CHIP 7.5K 0.50% 1/16W
R272	1-218-713-11	s	METAL, CHIP 7.5K 0.50% 1/16W
R273	1-218-719-11	s	METAL, CHIP 13K 0.50% 1/16W
R274	1-218-706-11	s	METAL, CHIP 3.9K 0.50% 1/16W
R275	1-218-704-11	s	METAL, CHIP 3.3K 0.50% 1/16W
R276	1-218-716-11	s	METAL, CHIP 10K 0.50% 1/16W
R277	1-218-698-11	s	METAL, CHIP 1.8K 0.50% 1/16W [For UC, J]
	1-218-719-11	s	METAL, CHIP 13K 0.50% 1/16W [For EK]
R278	1-218-732-11	s	METAL, CHIP 47K 0.50% 1/16W
R279	1-218-740-11	s	METAL, CHIP 100K 0.50% 1/16W
R280	1-218-704-11	s	METAL, CHIP 3.3K 0.50% 1/16W
R281	1-218-716-11	s	METAL, CHIP 10K 0.50% 1/16W
R282	1-218-716-11	s	METAL, CHIP 10K 0.50% 1/16W
R283	1-218-716-11	s	METAL, CHIP 10K 0.50% 1/16W
R284	1-218-736-11	s	METAL, CHIP 68K 0.50% 1/16W
R285	1-218-704-11	s	METAL, CHIP 3.3K 0.50% 1/16W
R286	1-218-716-11	s	METAL, CHIP 10K 0.50% 1/16W
R287	1-218-740-11	s	METAL, CHIP 100K 0.50% 1/16W
R288	1-218-690-11	s	METAL, CHIP 820 0.50% 1/16W
R289	1-218-700-11	s	METAL, CHIP 2.2K 0.50% 1/16W
R290	1-218-699-11	s	METAL, CHIP 2K 0.50% 1/16W
R291	1-218-716-11	s	METAL, CHIP 10K 0.50% 1/16W
R292	1-218-720-11	s	METAL, CHIP 15K 0.50% 1/16W

(ES-11/11(P) BOARD)

Ref. No. or Q'ty	Part No.	SP	Description
R293	1-218-668-11	s	METAL, CHIP 100 0.50% 1/16W
R294	1-218-684-11	s	METAL, CHIP 470 0.50% 1/16W
R295	1-218-692-11	s	METAL, CHIP 1K 0.50% 1/16W
R296	1-218-706-11	s	METAL, CHIP 3.9K 0.50% 1/16W
R298	1-216-855-11	s	METAL, CHIP 680K 5% 1/16W
R299	1-218-706-11	s	METAL, CHIP 3.9K 0.50% 1/16W
R300	1-218-716-11	s	METAL, CHIP 10K 0.50% 1/16W
R301	1-218-692-11	s	METAL, CHIP 1K 0.50% 1/16W
R302	1-218-668-11	s	METAL, CHIP 100 0.50% 1/16W [For UC, J]
R303	1-218-660-11	s	METAL, CHIP 47 0.50% 1/16W [For UC, J]
R305	1-218-692-11	s	METAL, CHIP 1K 0.50% 1/16W [For UC, J]
	1-218-710-11	s	METAL, CHIP 5.6K 0.50% 1/16W [For EK]
R306	1-218-706-11	s	METAL, CHIP 3.9K 0.50% 1/16W
R307	1-218-720-11	s	METAL, CHIP 15K 0.50% 1/16W
R308	1-218-692-11	s	METAL, CHIP 1K 0.50% 1/16W
R309	1-218-668-11	s	METAL, CHIP 100 0.50% 1/16W
R310	1-218-732-11	s	METAL, CHIP 47K 0.50% 1/16W
R311	1-218-728-11	s	METAL, CHIP 33K 0.50% 1/16W
R312	1-216-864-11	s	METAL, CHIP 0 5% 1/16W [For EK]
R313	1-218-708-11	s	METAL, CHIP 4.7K 0.50% 1/16W
R314	1-216-861-11	s	METAL, CHIP 2.2M 5% 1/16W
R315	1-216-864-11	s	METAL, CHIP 0 5% 1/16W [For EK]
R321	1-218-740-11	s	METAL, CHIP 100K 0.50% 1/16W
R322	1-218-740-11	s	METAL, CHIP 100K 0.50% 1/16W
R323	1-218-740-11	s	METAL, CHIP 100K 0.50% 1/16W
R324	1-218-732-11	s	METAL, CHIP 47K 0.50% 1/16W
R325	1-216-853-11	s	METAL, CHIP 470K 5% 1/16W
R326	1-218-710-11	s	METAL, CHIP 5.6K 0.50% 1/16W
R327	1-218-716-11	s	METAL, CHIP 10K 0.50% 1/16W
R328	1-218-732-11	s	METAL, CHIP 47K 0.50% 1/16W
R329	1-218-724-11	s	METAL, CHIP 22K 0.50% 1/16W
R330	1-218-692-11	s	METAL, CHIP 1K 0.50% 1/16W
R332	1-218-740-11	s	METAL, CHIP 100K 0.50% 1/16W
R333	1-218-660-11	s	METAL, CHIP 47 0.50% 1/16W [For UC, J]
R334	1-218-692-11	s	METAL, CHIP 1K 0.50% 1/16W
R335	1-218-660-11	s	METAL, CHIP 47 0.50% 1/16W
R336	1-218-716-11	s	METAL, CHIP 10K 0.50% 1/16W
R338	1-218-740-11	s	METAL, CHIP 100K 0.50% 1/16W
R339	1-218-724-11	s	METAL, CHIP 22K 0.50% 1/16W
R340	1-218-724-11	s	METAL, CHIP 22K 0.50% 1/16W
R341	1-218-724-11	s	METAL, CHIP 22K 0.50% 1/16W
R342	1-218-732-11	s	METAL, CHIP 47K 0.50% 1/16W
R343	1-218-656-11	s	METAL, CHIP 33 0.50% 1/16W
R344	1-218-656-11	s	METAL, CHIP 33 0.50% 1/16W
R345	1-216-857-11	s	METAL, CHIP 1M 5% 1/16W
R346	1-216-857-11	s	METAL, CHIP 1M 5% 1/16W
R347	1-216-864-11	s	METAL, CHIP 0 5% 1/16W [For UC, J]
R348	1-216-864-11	s	METAL, CHIP 0 5% 1/16W [For EK]
R349	1-218-660-11	s	METAL, CHIP 47 0.50% 1/16W [For EK]

(ES-11/11(P) BOARD)

Ref. No. or Q'ty	Part No.	SP	Description
R350	1-218-660-11	s	METAL, CHIP 47 0.50% 1/16W [For UC, J]
R351	1-218-740-11	s	METAL, CHIP 100K 0.50% 1/16W
R352	1-218-660-11	s	METAL, CHIP 47 0.50% 1/16W [For EK]
R353	1-218-704-11	s	METAL, CHIP 3.3K 0.50% 1/16W [For UC, J]
	1-218-705-11	s	METAL, CHIP 3.6K 0.50% 1/16W [For EK]
R354	1-218-716-11	s	METAL, CHIP 10K 0.50% 1/16W
R355	1-218-716-11	s	METAL, CHIP 10K 0.50% 1/16W [For UC, J]
	1-218-712-11	s	METAL, CHIP 6.8K 0.50% 1/16W [For EK]
R356	1-218-724-11	s	METAL, CHIP 22K 0.50% 1/16W
R357	1-218-724-11	s	METAL, CHIP 22K 0.50% 1/16W
R358	1-218-724-11	s	METAL, CHIP 22K 0.50% 1/16W
R359	1-218-692-11	s	METAL, CHIP 1K 0.50% 1/16W
R360	1-218-716-11	s	METAL, CHIP 10K 0.50% 1/16W
R361	1-218-700-11	s	METAL, CHIP 2.2K 0.50% 1/16W
R362	1-218-668-11	s	METAL, CHIP 100 0.50% 1/16W
R363	1-218-692-11	s	METAL, CHIP 1K 0.50% 1/16W
R364	1-218-692-11	s	METAL, CHIP 1K 0.50% 1/16W
R365	1-218-726-11	s	METAL, CHIP 27K 0.50% 1/16W
R366	1-218-726-11	s	METAL, CHIP 27K 0.50% 1/16W
R367	1-218-716-11	s	METAL, CHIP 10K 0.50% 1/16W
R368	1-218-668-11	s	METAL, CHIP 100 0.50% 1/16W
R369	1-218-700-11	s	METAL, CHIP 2.2K 0.50% 1/16W
R370	1-218-720-11	s	METAL, CHIP 15K 0.50% 1/16W
R371	1-218-716-11	s	METAL, CHIP 10K 0.50% 1/16W
R372	1-218-716-11	s	METAL, CHIP 10K 0.50% 1/16W
R373	1-218-700-11	s	METAL, CHIP 2.2K 0.50% 1/16W
R374	1-218-692-11	s	METAL, CHIP 1K 0.50% 1/16W
R375	1-218-724-11	s	METAL, CHIP 22K 0.50% 1/16W
R376	1-218-740-11	s	METAL, CHIP 100K 0.50% 1/16W
R377	1-216-864-11	s	METAL, CHIP 0 5% 1/16W
R379	1-218-704-11	s	METAL, CHIP 3.3K 0.50% 1/16W
R380	1-218-724-11	s	METAL, CHIP 22K 0.50% 1/16W
R381	1-218-660-11	s	METAL, CHIP 47 0.50% 1/16W
R382	1-218-740-11	s	METAL, CHIP 100K 0.50% 1/16W
R383	1-218-724-11	s	METAL, CHIP 22K 0.50% 1/16W
R384	1-218-724-11	s	METAL, CHIP 22K 0.50% 1/16W
R386	1-218-692-11	s	METAL, CHIP 1K 0.50% 1/16W
R388	1-218-740-11	s	METAL, CHIP 100K 0.50% 1/16W
R389	1-218-692-11	s	METAL, CHIP 1K 0.50% 1/16W [For EK]
R390	1-218-656-11	s	METAL, CHIP 33 0.50% 1/16W
R391	1-218-656-11	s	METAL, CHIP 33 0.50% 1/16W
R392	1-218-719-11	s	METAL, CHIP 13K 0.50% 1/16W
R393	1-218-724-11	s	METAL, CHIP 22K 0.50% 1/16W
R394	1-218-736-11	s	METAL, CHIP 68K 0.50% 1/16W
R395	1-218-714-11	s	METAL, CHIP 8.2K 0.50% 1/16W
R396-400	1-218-652-11	s	METAL, CHIP 22 0.50% 1/16W
R401	1-218-742-11	s	METAL, CHIP 120K 0.50% 1/16W
R402	1-218-736-11	s	METAL, CHIP 68K 0.50% 1/16W
R403	1-218-742-11	s	METAL, CHIP 120K 0.50% 1/16W
R404	1-216-791-11	s	METAL, CHIP 3.3 5% 1/16W

(ES-11/11(P) BOARD)

Ref. No. or Q'ty	Part No.	SP	Description
R405	1-216-791-11	s	METAL, CHIP 3.3 5% 1/16W
R406	1-218-683-11	s	METAL, CHIP 430 0.50% 1/16W
R407	1-218-722-11	s	METAL, CHIP 18K 0.50% 1/16W
R408	1-216-864-11	s	METAL, CHIP 0 5% 1/16W
R409	1-218-700-11	s	METAL, CHIP 2.2K 0.50% 1/16W
R410	1-218-724-11	s	METAL, CHIP 22K 0.50% 1/16W
R411	1-218-652-11	s	METAL, CHIP 22 0.50% 1/16W
R412	1-218-719-11	s	METAL, CHIP 13K 0.50% 1/16W
R414	1-218-719-11	s	METAL, CHIP 13K 0.50% 1/16W
R416	1-218-719-11	s	METAL, CHIP 13K 0.50% 1/16W
R418	1-218-719-11	s	METAL, CHIP 13K 0.50% 1/16W
R420	1-218-724-11	s	METAL, CHIP 22K 0.50% 1/16W
R421	1-218-724-11	s	METAL, CHIP 22K 0.50% 1/16W
R422	1-218-723-11	s	METAL, CHIP 20K 0.50% 1/16W
R423	1-218-718-11	s	METAL, CHIP 12K 0.50% 1/16W
R425	1-218-708-11	s	METAL, CHIP 4.7K 0.50% 1/16W
R426	1-218-730-11	s	METAL, CHIP 39K 0.50% 1/16W
R427	1-218-716-11	s	METAL, CHIP 10K 0.50% 1/16W
R428	1-218-708-11	s	METAL, CHIP 4.7K 0.50% 1/16W
R429	1-218-692-11	s	METAL, CHIP 1K 0.50% 1/16W
R430	1-218-716-11	s	METAL, CHIP 10K 0.50% 1/16W
R431	1-218-708-11	s	METAL, CHIP 4.7K 0.50% 1/16W
R432	1-218-730-11	s	METAL, CHIP 39K 0.50% 1/16W
R433	1-218-716-11	s	METAL, CHIP 10K 0.50% 1/16W
R434	1-218-708-11	s	METAL, CHIP 4.7K 0.50% 1/16W
R435	1-218-692-11	s	METAL, CHIP 1K 0.50% 1/16W
R436	1-218-716-11	s	METAL, CHIP 10K 0.50% 1/16W
R437	1-218-660-11	s	METAL, CHIP 47 0.50% 1/16W [For UC, J]
R438	1-218-660-11	s	METAL, CHIP 47 0.50% 1/16W [For UC, J]
	1-218-711-11	s	METAL, CHIP 6.2K 0.50% 1/16W [For EK]
R439	1-216-864-11	s	METAL, CHIP 0 5% 1/16W [For UC, J]
R440	1-218-740-11	s	METAL, CHIP 100K 0.50% 1/16W
R441	1-218-682-11	s	METAL, CHIP 390 0.50% 1/16W
R442	1-216-853-11	s	METAL, CHIP 470K 5% 1/16W
R443	1-216-864-11	s	METAL, CHIP 0 5% 1/16W
R444	1-218-668-11	s	METAL, CHIP 100 0.50% 1/16W
R445	1-216-864-11	s	METAL, CHIP 0 5% 1/16W [For EK]
R446	1-216-864-11	s	METAL, CHIP 0 5% 1/16W [For UC, J]
R447	1-218-716-11	s	METAL, CHIP 10K 0.50% 1/16W
R448	1-216-857-11	s	METAL, CHIP 1M 5% 1/16W
R449	1-216-857-11	s	METAL, CHIP 1M 5% 1/16W
R450	1-216-857-11	s	METAL, CHIP 1M 5% 1/16W
R452	1-218-740-11	s	METAL, CHIP 100K 0.50% 1/16W
R453	1-218-740-11	s	METAL, CHIP 100K 0.50% 1/16W
R454	1-216-857-11	s	METAL, CHIP 1M 5% 1/16W
R455	1-216-857-11	s	METAL, CHIP 1M 5% 1/16W
RB1	1-236-908-11	s	NETWORK RESISTOR (CHIP) 10K

HN-224 BOARD

Ref. No. or Q'ty	Part No.	SP	Description
1pc	A-8277-530-A	o	MOUNTED CIRCUIT BOARD, HN-224
1pc	2-279-715-11	s	RIVET, NYLON
1pc	3-603-566-01	o	BRACKET HN
1pc	3-729-013-41	s	SCREW M1.4X3.5, WASHERHEAD(+P)
C1	1-162-959-11	s	CERAMIC, CHIP 330PF 5% 50V
C2	1-162-970-11	s	CERAMIC, CHIP 0.01uF 10% 25V
C3	1-107-826-11	s	CERAMIC, CHIP 0.1uF 10% 16V
C4	1-104-553-11	s	FILM, CHIP 0.015uF 5% 16V
C5	1-104-913-11	s	TANTALUM, CHIP 10uF 20% 16V
C6	1-104-913-11	s	TANTALUM, CHIP 10uF 20% 16V
C7	1-162-925-11	s	CERAMIC, CHIP 68PF 5% 50V
C8	1-104-913-11	s	TANTALUM, CHIP 10uF 20% 16V
C9	1-104-913-11	s	TANTALUM, CHIP 10uF 20% 16V
C10	1-104-913-11	s	TANTALUM, CHIP 10uF 20% 16V
C11	1-104-913-11	s	TANTALUM, CHIP 10uF 20% 16V
C12-21	1-107-826-11	s	CERAMIC, CHIP 0.1uF 10% 16V
CN1	1-569-607-21	o	CONNECTOR, BOARD TO BOARD 24P
CN2	1-573-290-21	s	PIN, CONNECTOR (1.5MM)(SMD) 4P
CN3	1-569-775-21	s	PIN, CONNECTOR (1.5MM)(SMD) 5P
CN4	1-691-551-11	s	PIN, CONNECTOR (1.5MM)(SMD) 8P
CN5	1-750-159-21	o	CONNECTOR, FPC 5P
CN6	1-580-789-21	s	PIN, CONNECTOR (1.5MM)(SMD) 6P
IC1	8-759-066-61	s	IC TC4053BFS
IC2	8-759-710-28	s	IC NJM4565M-A
IC3	8-759-710-28	s	IC NJM4565M-A
IC4	8-759-338-95	s	IC NJM2903V(TE2)
IC5	8-759-031-84	s	IC TC7S04F
IC6	8-759-234-77	s	IC TC4S66F
Q1	8-729-117-32	s	TRANSISTOR 2SC4177
Q2	8-729-140-63	s	TRANSISTOR 2SA1611-M5M6
Q10	8-729-140-63	s	TRANSISTOR 2SA1611-M5M6
Q11	8-729-117-32	s	TRANSISTOR 2SC4177
Q12	8-729-140-63	s	TRANSISTOR 2SA1611-M5M6
Q13	8-729-117-32	s	TRANSISTOR 2SC4177
R1	1-218-708-11	s	METAL, CHIP 4.7K 0.50% 1/16W
R2	1-218-708-11	s	METAL, CHIP 4.7K 0.50% 1/16W
R3	1-218-740-11	s	METAL, CHIP 100K 0.50% 1/16W
R4	1-216-853-11	s	METAL, CHIP 470K 5% 1/16W
R5	1-218-716-11	s	METAL, CHIP 10K 0.50% 1/16W
R6	1-218-696-11	s	METAL, CHIP 1.5K 0.50% 1/16W
R7	1-218-750-11	s	METAL, CHIP 270K 0.50% 1/16W
R8	1-218-676-11	s	METAL, CHIP 220 0.50% 1/16W
R9	1-218-740-11	s	METAL, CHIP 100K 0.50% 1/16W
R10	1-218-708-11	s	METAL, CHIP 4.7K 0.50% 1/16W
R11	1-218-644-11	s	METAL, CHIP 10 0.50% 1/16W
R12	1-218-740-11	s	METAL, CHIP 100K 0.50% 1/16W
R13	1-218-684-11	s	METAL, CHIP 470 0.50% 1/16W
R14	1-218-678-11	s	METAL, CHIP 270 0.50% 1/16W
R15	1-218-696-11	s	METAL, CHIP 1.5K 0.50% 1/16W
R16	1-218-744-11	s	METAL, CHIP 150K 0.50% 1/16W
R17	1-218-708-11	s	METAL, CHIP 4.7K 0.50% 1/16W
R18	1-218-668-11	s	METAL, CHIP 100 0.50% 1/16W
R19	1-218-704-11	s	METAL, CHIP 3.3K 0.50% 1/16W
R20	1-218-740-11	s	METAL, CHIP 100K 0.50% 1/16W
R21	1-218-716-11	s	METAL, CHIP 10K 0.50% 1/16W
R22	1-216-857-11	s	METAL, CHIP 1M 5% 1/16W

(HN-224 BOARD)

Ref. No. or Q'ty	Part No.	SP	Description
R23	1-218-708-11	s	METAL, CHIP 4.7K 0.50% 1/16W
R24	1-218-708-11	s	METAL, CHIP 4.7K 0.50% 1/16W
R25	1-218-740-11	s	METAL, CHIP 100K 0.50% 1/16W
R26	1-218-732-11	s	METAL, CHIP 47K 0.50% 1/16W
R27	1-218-732-11	s	METAL, CHIP 47K 0.50% 1/16W
R28	1-218-708-11	s	METAL, CHIP 4.7K 0.50% 1/16W
R29	1-218-750-11	s	METAL, CHIP 270K 0.50% 1/16W
R30	1-218-746-11	s	METAL, CHIP 180K 0.50% 1/16W
R31	1-218-692-11	s	METAL, CHIP 1K 0.50% 1/16W
R32	1-218-716-11	s	METAL, CHIP 10K 0.50% 1/16W
R33	1-218-716-11	s	METAL, CHIP 10K 0.50% 1/16W
R34	1-218-740-11	s	METAL, CHIP 100K 0.50% 1/16W
R35	1-218-740-11	s	METAL, CHIP 100K 0.50% 1/16W
R36	1-218-692-11	s	METAL, CHIP 1K 0.50% 1/16W

HP-70 BOARD

Ref. No. or Q'ty	Part No.	SP	Description
1pc	1-662-345-11	o	PRINTED CIRCUIT BOARD, HP-70
C1	1-164-161-11	s	CERAMIC, CHIP 0.0022uF 10% 100V
C2	1-164-161-11	s	CERAMIC, CHIP 0.0022uF 10% 100V
CN1	1-580-057-11	s	PIN, CONNECTOR (1.5MM)(SMD) 4P
FL1	1-239-895-12	s	FILTER, EMI (SMD)
J1	1-507-980-41	s	JACK, MINI
L1	1-412-170-11	s	INDUCTOR 0.47uH
L2	1-410-389-31	s	INDUCTOR CHIP 47UH
Q1	8-729-209-07	s	TRANSISTOR 2SC4213-B
Q2	8-729-209-07	s	TRANSISTOR 2SC4213-B
R1	1-216-607-11	s	METAL, CHIP 15 0.50% 1/10W
R2	1-216-607-11	s	METAL, CHIP 15 0.50% 1/10W
R4	1-216-651-11	s	METAL, CHIP 1K 0.5% 1/10W
R5	1-216-651-11	s	METAL, CHIP 1K 0.5% 1/10W

IF-634 BOARD *For DNV-5 only

Ref. No. or Q'ty	Part No.	SP	Description
DUS-42 board, DUS-54 board, DUS-55 board and DUS-56 board are included in this board.			
1pc	A-8311-264-A	o	MOUNTED CIRCUIT BOARD, IF-634
2pcs	3-603-737-01	o	LEVER,BOARD
5pcs	3-729-061-01	s	SCREW M2X4.5 (TYPE 1)
C1	1-107-826-11	s	CERAMIC, CHIP 0.1uF 10% 16V
C2	1-107-826-11	s	CERAMIC, CHIP 0.1uF 10% 16V
C4	1-164-227-11	s	CERAMIC, CHIP 0.022uF 10% 25V
C5	1-164-227-11	s	CERAMIC, CHIP 0.022uF 10% 25V
C6	1-164-227-11	s	CERAMIC, CHIP 0.022uF 10% 25V
C7	1-164-227-11	s	CERAMIC, CHIP 0.022uF 10% 25V
C100	1-104-823-11	s	TANTALUM, CHIP 47uF 20% 16V
C101	1-164-227-11	s	CERAMIC, CHIP 0.022uF 10% 25V
C102	1-104-823-11	s	TANTALUM, CHIP 47uF 20% 16V
C103	1-164-227-11	s	CERAMIC, CHIP 0.022uF 10% 25V
C104	1-162-926-11	s	CERAMIC, CHIP 82PF 5% 50V
C105	1-162-928-11	s	CERAMIC, CHIP 120PF 5% 50V
C106	1-162-920-11	s	CERAMIC, CHIP 27PF 5% 50V
C107	1-104-914-11	s	TANTALUM, CHIP 22uF 20% 16V
C108	1-104-914-11	s	TANTALUM, CHIP 22uF 20% 16V
C109	1-164-227-11	s	CERAMIC, CHIP 0.022uF 10% 25V
C110	1-164-227-11	s	CERAMIC, CHIP 0.022uF 10% 25V
C111	1-135-072-21	s	TANTALUM, CHIP 0.22uF 10% 35V
C112	1-104-851-11	s	TANTALUM, CHIP 10uF 20% 10V
C113	1-135-070-00	s	TANTALUM, CHIP 0.1uF 10% 35V
C114	1-164-227-11	s	CERAMIC, CHIP 0.022uF 10% 25V
C115	1-164-227-11	s	CERAMIC, CHIP 0.022uF 10% 25V
C116	1-164-227-11	s	CERAMIC, CHIP 0.022uF 10% 25V
C117	1-104-851-11	s	TANTALUM, CHIP 10uF 20% 10V
C118	1-107-826-11	s	CERAMIC, CHIP 0.1uF 10% 16V
C119	1-164-227-11	s	CERAMIC, CHIP 0.022uF 10% 25V
C120	1-164-227-11	s	CERAMIC, CHIP 0.022uF 10% 25V
C121	1-104-914-11	s	TANTALUM, CHIP 22uF 20% 16V
C122	1-104-914-11	s	TANTALUM, CHIP 22uF 20% 16V
C123	1-107-826-11	s	CERAMIC, CHIP 0.1uF 10% 16V
C124	1-162-923-11	s	CERAMIC, CHIP 47PF 5% 50V
C125	1-107-826-11	s	CERAMIC, CHIP 0.1uF 10% 16V
C126	1-104-851-11	s	TANTALUM, CHIP 10uF 20% 10V
C127	1-107-826-11	s	CERAMIC, CHIP 0.1uF 10% 16V
C128	1-107-826-11	s	CERAMIC, CHIP 0.1uF 10% 16V
C129	1-107-826-11	s	CERAMIC, CHIP 0.1uF 10% 16V
C130	1-107-826-11	s	CERAMIC, CHIP 0.1uF 10% 16V
C200	1-104-823-11	s	TANTALUM, CHIP 47uF 20% 16V
C201	1-164-227-11	s	CERAMIC, CHIP 0.022uF 10% 25V
C202	1-104-823-11	s	TANTALUM, CHIP 47uF 20% 16V
C203	1-164-227-11	s	CERAMIC, CHIP 0.022uF 10% 25V
C204	1-162-923-11	s	CERAMIC, CHIP 47PF 5% 50V
C205	1-104-914-11	s	TANTALUM, CHIP 22uF 20% 16V
C206	1-104-914-11	s	TANTALUM, CHIP 22uF 20% 16V
C207	1-164-227-11	s	CERAMIC, CHIP 0.022uF 10% 25V
C208	1-164-227-11	s	CERAMIC, CHIP 0.022uF 10% 25V
C209	1-135-072-21	s	TANTALUM, CHIP 0.22uF 10% 35V
C210	1-104-851-11	s	TANTALUM, CHIP 10uF 20% 10V
C211	1-135-070-00	s	TANTALUM, CHIP 0.1uF 10% 35V
C212	1-164-227-11	s	CERAMIC, CHIP 0.022uF 10% 25V

(IF-634 BOARD)

Ref. No. or Q'ty	Part No.	SP	Description
C213	1-107-826-11	s	CERAMIC, CHIP 0.1uF 10% 16V
C214	1-162-927-11	s	CERAMIC, CHIP 100PF 5% 50V
C215	1-162-970-11	s	CERAMIC, CHIP 0.01uF 10% 25V
C216	1-162-923-11	s	CERAMIC, CHIP 47PF 5% 50V
C217	1-164-227-11	s	CERAMIC, CHIP 0.022uF 10% 25V
C218	1-164-227-11	s	CERAMIC, CHIP 0.022uF 10% 25V
C219	1-104-914-11	s	TANTALUM, CHIP 22uF 20% 16V
C220	1-104-914-11	s	TANTALUM, CHIP 22uF 20% 16V
C221	1-107-826-11	s	CERAMIC, CHIP 0.1uF 10% 16V
C222	1-162-927-11	s	CERAMIC, CHIP 100PF 5% 50V
C223	1-107-826-11	s	CERAMIC, CHIP 0.1uF 10% 16V
C224	1-104-851-11	s	TANTALUM, CHIP 10uF 20% 10V
C225	1-107-826-11	s	CERAMIC, CHIP 0.1uF 10% 16V
C226	1-107-826-11	s	CERAMIC, CHIP 0.1uF 10% 16V
C227	1-107-826-11	s	CERAMIC, CHIP 0.1uF 10% 16V
C228	1-107-826-11	s	CERAMIC, CHIP 0.1uF 10% 16V
C229	1-164-227-11	s	CERAMIC, CHIP 0.022uF 10% 25V
C300	1-104-823-11	s	TANTALUM, CHIP 47uF 20% 16V
C301	1-164-227-11	s	CERAMIC, CHIP 0.022uF 10% 25V
C302	1-104-823-11	s	TANTALUM, CHIP 47uF 20% 16V
C303	1-164-227-11	s	CERAMIC, CHIP 0.022uF 10% 25V
C304	1-162-923-11	s	CERAMIC, CHIP 47PF 5% 50V
C305	1-104-914-11	s	TANTALUM, CHIP 22uF 20% 16V
C306	1-104-914-11	s	TANTALUM, CHIP 22uF 20% 16V
C307	1-164-227-11	s	CERAMIC, CHIP 0.022uF 10% 25V
C308	1-164-227-11	s	CERAMIC, CHIP 0.022uF 10% 25V
C309	1-135-072-21	s	TANTALUM, CHIP 0.22uF 10% 35V
C310	1-104-851-11	s	TANTALUM, CHIP 10uF 20% 10V
C311	1-135-070-00	s	TANTALUM, CHIP 0.1uF 10% 35V
C312	1-164-227-11	s	CERAMIC, CHIP 0.022uF 10% 25V
C313	1-107-826-11	s	CERAMIC, CHIP 0.1uF 10% 16V
C314	1-162-927-11	s	CERAMIC, CHIP 100PF 5% 50V
C315	1-162-970-11	s	CERAMIC, CHIP 0.01uF 10% 25V
C316	1-162-923-11	s	CERAMIC, CHIP 47PF 5% 50V
C317	1-164-227-11	s	CERAMIC, CHIP 0.022uF 10% 25V
C318	1-164-227-11	s	CERAMIC, CHIP 0.022uF 10% 25V
C319	1-104-914-11	s	TANTALUM, CHIP 22uF 20% 16V
C320	1-162-927-11	s	CERAMIC, CHIP 100PF 5% 50V
C321	1-104-914-11	s	TANTALUM, CHIP 22uF 20% 16V
C322	1-107-826-11	s	CERAMIC, CHIP 0.1uF 10% 16V
C323	1-107-826-11	s	CERAMIC, CHIP 0.1uF 10% 16V
C324	1-104-851-11	s	TANTALUM, CHIP 10uF 20% 10V
C325	1-107-826-11	s	CERAMIC, CHIP 0.1uF 10% 16V
C326	1-107-826-11	s	CERAMIC, CHIP 0.1uF 10% 16V
C328	1-107-826-11	s	CERAMIC, CHIP 0.1uF 10% 16V
C329	1-107-826-11	s	CERAMIC, CHIP 0.1uF 10% 16V
C400	1-164-227-11	s	CERAMIC, CHIP 0.022uF 10% 25V
C401	1-164-227-11	s	CERAMIC, CHIP 0.022uF 10% 25V
C402	1-164-315-11	s	CERAMIC, CHIP 470PF 5% 50V
C403	1-162-957-11	s	CERAMIC, CHIP 220PF 5% 50V
C404	1-162-957-11	s	CERAMIC, CHIP 220PF 5% 50V
C405	1-162-970-11	s	CERAMIC, CHIP 0.01uF 10% 25V
C407	1-162-927-11	s	CERAMIC, CHIP 100PF 5% 50V
C408	1-164-227-11	s	CERAMIC, CHIP 0.022uF 10% 25V
C409	1-164-227-11	s	CERAMIC, CHIP 0.022uF 10% 25V
C410	1-104-559-11	s	FILM, CHIP 0.047uF 5% 16V
C411	1-164-227-11	s	CERAMIC, CHIP 0.022uF 10% 25V
C412	1-164-227-11	s	CERAMIC, CHIP 0.022uF 10% 25V
C413	1-164-227-11	s	CERAMIC, CHIP 0.022uF 10% 25V

(IF-634 BOARD)

Ref. No. or Q'ty	Part No.	SP	Description
C414	1-164-227-11	s	CERAMIC, CHIP 0.022uF 10% 25V
C415	1-162-928-11	s	CERAMIC, CHIP 120PF 5% 50V
C416	1-107-826-11	s	CERAMIC, CHIP 0.1uF 10% 16V
C417	1-164-227-11	s	CERAMIC, CHIP 0.022uF 10% 25V
C418	1-164-227-11	s	CERAMIC, CHIP 0.022uF 10% 25V
C420	1-164-227-11	s	CERAMIC, CHIP 0.022uF 10% 25V
C422	1-164-227-11	s	CERAMIC, CHIP 0.022uF 10% 25V
C425-432	1-164-227-11	s	CERAMIC, CHIP 0.022uF 10% 25V
C500	1-104-851-11	s	TANTALUM, CHIP 10uF 20% 10V
C501	1-113-991-11	s	TANTALUM, CHIP 33uF 20% 16V
C502	1-164-227-11	s	CERAMIC, CHIP 0.022uF 10% 25V
C503	1-104-851-11	s	TANTALUM, CHIP 10uF 20% 10V
C504	1-164-227-11	s	CERAMIC, CHIP 0.022uF 10% 25V
C505	1-164-227-11	s	CERAMIC, CHIP 0.022uF 10% 25V
C506	1-164-227-11	s	CERAMIC, CHIP 0.022uF 10% 25V
C507	1-164-227-11	s	CERAMIC, CHIP 0.022uF 10% 25V
C508	1-162-964-11	s	CERAMIC, CHIP 0.001uF 10% 50V
C509-521	1-164-227-11	s	CERAMIC, CHIP 0.022uF 10% 25V
C523	1-164-227-11	s	CERAMIC, CHIP 0.022uF 10% 25V
C524	1-164-227-11	s	CERAMIC, CHIP 0.022uF 10% 25V
C525	1-162-964-11	s	CERAMIC, CHIP 0.001uF 10% 50V
C526	1-164-227-11	s	CERAMIC, CHIP 0.022uF 10% 25V
C527	1-164-227-11	s	CERAMIC, CHIP 0.022uF 10% 25V
C528	1-164-227-11	s	CERAMIC, CHIP 0.022uF 10% 25V
C529	1-164-227-11	s	CERAMIC, CHIP 0.022uF 10% 25V
C600	1-113-991-11	s	TANTALUM, CHIP 33uF 20% 16V
C601	1-164-227-11	s	CERAMIC, CHIP 0.022uF 10% 25V
C602	1-162-964-11	s	CERAMIC, CHIP 0.001uF 10% 50V
C603	1-162-957-11	s	CERAMIC, CHIP 220PF 5% 50V
C604	1-104-914-11	s	TANTALUM, CHIP 22uF 20% 16V
C605	1-107-826-11	s	CERAMIC, CHIP 0.1uF 10% 16V
C606	1-162-970-11	s	CERAMIC, CHIP 0.01uF 10% 25V
C607	1-104-914-11	s	TANTALUM, CHIP 22uF 20% 16V
C608	1-164-227-11	s	CERAMIC, CHIP 0.022uF 10% 25V
C609	1-113-991-11	s	TANTALUM, CHIP 33uF 20% 16V
C610	1-164-227-11	s	CERAMIC, CHIP 0.022uF 10% 25V
C611	1-164-227-11	s	CERAMIC, CHIP 0.022uF 10% 25V
C612	1-113-991-11	s	TANTALUM, CHIP 33uF 20% 16V
C613	1-164-227-11	s	CERAMIC, CHIP 0.022uF 10% 25V
C614	1-164-227-11	s	CERAMIC, CHIP 0.022uF 10% 25V
C615	1-104-851-11	s	TANTALUM, CHIP 10uF 20% 10V
C616-620	1-164-227-11	s	CERAMIC, CHIP 0.022uF 10% 25V
C621	1-107-826-11	s	CERAMIC, CHIP 0.1uF 10% 16V
C622	1-107-826-11	s	CERAMIC, CHIP 0.1uF 10% 16V
C623	1-164-227-11	s	CERAMIC, CHIP 0.022uF 10% 25V
C624	1-111-253-11	s	TANTALUM, CHIP 100uF 20% 6.3V
C625	1-111-253-11	s	TANTALUM, CHIP 100uF 20% 6.3V
C626	1-111-253-11	s	TANTALUM, CHIP 100uF 20% 6.3V
C627	1-104-851-11	s	TANTALUM, CHIP 10uF 20% 10V
C628	1-104-851-11	s	TANTALUM, CHIP 10uF 20% 10V
C629	1-104-851-11	s	TANTALUM, CHIP 10uF 20% 10V
C630	1-104-851-11	s	TANTALUM, CHIP 10uF 20% 10V
C631-635	1-164-227-11	s	CERAMIC, CHIP 0.022uF 10% 25V
C636	1-104-851-11	s	TANTALUM, CHIP 10uF 20% 10V
C637	1-164-227-11	s	CERAMIC, CHIP 0.022uF 10% 25V
C638	1-164-227-11	s	CERAMIC, CHIP 0.022uF 10% 25V
C700	1-135-215-21	s	TANTALUM, CHIP 6.8uF 10% 16V
C701	1-164-227-11	s	CERAMIC, CHIP 0.022uF 10% 25V
C702	1-164-227-11	s	CERAMIC, CHIP 0.022uF 10% 25V

(IF-634 BOARD)

Ref. No. or Q'ty	Part No.	SP	Description
C703	1-107-826-11	s	CERAMIC, CHIP 0.1uF 10% 16V
C704	1-107-826-11	s	CERAMIC, CHIP 0.1uF 10% 16V
C705	1-107-826-11	s	CERAMIC, CHIP 0.1uF 10% 16V
C706	1-164-227-11	s	CERAMIC, CHIP 0.022uF 10% 25V
C707	1-135-210-11	s	TANTALUM, CHIP 4.7uF 20% 10V
C708	1-162-964-11	s	CERAMIC, CHIP 0.001uF 10% 50V
C709	1-164-227-11	s	CERAMIC, CHIP 0.022uF 10% 25V
C710	1-162-964-11	s	CERAMIC, CHIP 0.001uF 10% 50V
C711	1-162-915-11	s	CERAMIC, CHIP 10PF 50V
C712	1-162-915-11	s	CERAMIC, CHIP 10PF 50V
C713	1-135-091-00	s	TANTALUN, CHIP 1uF 10% 16V
C714	1-104-851-11	s	TANTALUM, CHIP 10uF 20% 10V
C715	1-164-227-11	s	CERAMIC, CHIP 0.022uF 10% 25V
C716	1-164-227-11	s	CERAMIC, CHIP 0.022uF 10% 25V
C717	1-107-826-11	s	CERAMIC, CHIP 0.1uF 10% 16V
C718	1-164-227-11	s	CERAMIC, CHIP 0.022uF 10% 25V
C719	1-164-227-11	s	CERAMIC, CHIP 0.022uF 10% 25V
C720	1-113-991-11	s	TANTALUM, CHIP 33uF 20% 16V
C721	1-107-826-11	s	CERAMIC, CHIP 0.1uF 10% 16V
C732	1-164-227-11	s	CERAMIC, CHIP 0.022uF 10% 25V
C733	1-164-227-11	s	CERAMIC, CHIP 0.022uF 10% 25V
C734	1-164-227-11	s	CERAMIC, CHIP 0.022uF 10% 25V
C735	1-164-227-11	s	CERAMIC, CHIP 0.022uF 10% 25V
C736	1-162-917-11	s	CERAMIC, CHIP 15PF 5% 50V
C737	1-162-924-11	s	CERAMIC 56PF 5% 50V
C738	1-162-927-11	s	CERAMIC, CHIP 100PF 5% 50V
C739	1-162-924-11	s	CERAMIC 56PF 5% 50V
C740	1-107-826-11	s	CERAMIC, CHIP 0.1uF 10% 16V
C741	1-107-826-11	s	CERAMIC, CHIP 0.1uF 10% 16V
C742	1-162-908-11	s	CERAMIC, CHIP 3PF 50V
C743	1-113-642-11	s	TANTALUM, CHIP 47uF 20% 10V
C744	1-113-642-11	s	TANTALUM, CHIP 47uF 20% 10V
C745	1-164-227-11	s	CERAMIC, CHIP 0.022uF 10% 25V
C746	1-164-227-11	s	CERAMIC, CHIP 0.022uF 10% 25V
C747	1-113-682-11	s	TANTALUM, CHIP 33uF 20% 10V
C748	1-113-682-11	s	TANTALUM, CHIP 33uF 20% 10V
C749	1-162-908-11	s	CERAMIC, CHIP 3PF 50V
C750	1-164-227-11	s	CERAMIC, CHIP 0.022uF 10% 25V
C751	1-164-227-11	s	CERAMIC, CHIP 0.022uF 10% 25V
C752	1-164-227-11	s	CERAMIC, CHIP 0.022uF 10% 25V
C753	1-164-227-11	s	CERAMIC, CHIP 0.022uF 10% 25V
C756	1-113-991-11	s	TANTALUM, CHIP 33uF 20% 16V
C758	1-164-315-11	s	CERAMIC, CHIP 470PF 5% 50V
C759	1-107-826-11	s	CERAMIC, CHIP 0.1uF 10% 16V
C760	1-107-826-11	s	CERAMIC, CHIP 0.1uF 10% 16V
C761	1-113-682-11	s	TANTALUM, CHIP 33uF 20% 10V
C762	1-113-682-11	s	TANTALUM, CHIP 33uF 20% 10V
C851	1-164-218-11	s	CERAMIC, CHIP 180PF 50V
C852	1-162-927-11	s	CERAMIC, CHIP 100PF 5% 50V
C853	1-164-227-11	s	CERAMIC, CHIP 0.022uF 10% 25V
C854	1-162-908-11	s	CERAMIC, CHIP 3PF 50V
C855	1-107-826-11	s	CERAMIC, CHIP 0.1uF 10% 16V
C856	1-135-210-11	s	TANTALUM, CHIP 4.7uF 20% 10V
C857	1-135-210-11	s	TANTALUM, CHIP 4.7uF 20% 10V
C858	1-135-091-00	s	TANTALUN, CHIP 1uF 10% 16V
C859	1-107-826-11	s	CERAMIC, CHIP 0.1uF 10% 16V
C864	1-164-227-11	s	CERAMIC, CHIP 0.022uF 10% 25V
C865	1-107-826-11	s	CERAMIC, CHIP 0.1uF 10% 16V
C866	1-107-826-11	s	CERAMIC, CHIP 0.1uF 10% 16V

(IF-634 BOARD)

Ref. No. or Q'ty	Part No.	SP	Description
C900	1-164-227-11	s	CERAMIC, CHIP 0.022uF 10% 25V
C901	1-164-227-11	s	CERAMIC, CHIP 0.022uF 10% 25V
C902	1-104-914-11	s	TANTALUM, CHIP 22uF 20% 16V
C903	1-107-826-11	s	CERAMIC, CHIP 0.1uF 10% 16V
C904	1-107-826-11	s	CERAMIC, CHIP 0.1uF 10% 16V
C905	1-107-826-11	s	CERAMIC, CHIP 0.1uF 10% 16V
C908	1-110-569-11	s	TANTALUM, CHIP 47uF 20% 6.3V
C909	1-135-215-21	s	TANTALUM, CHIP 6.8uF 10% 16V
C910	1-135-215-21	s	TANTALUM, CHIP 6.8uF 10% 16V
C911	1-164-227-11	s	CERAMIC, CHIP 0.022uF 10% 25V
C912	1-164-227-11	s	CERAMIC, CHIP 0.022uF 10% 25V
C913	1-164-227-11	s	CERAMIC, CHIP 0.022uF 10% 25V
C914	1-164-227-11	s	CERAMIC, CHIP 0.022uF 10% 25V
C915	1-135-177-21	s	TANTALUM, CHIP 1uF 10% 25V
C916	1-135-177-21	s	TANTALUM, CHIP 1uF 10% 25V
C917	1-164-227-11	s	CERAMIC, CHIP 0.022uF 10% 25V
C918	1-135-211-11	s	TANTALUM, CHIP 6.8uF 20% 6.3V
C919	1-135-211-11	s	TANTALUM, CHIP 6.8uF 20% 6.3V
C920-924	1-104-823-11	s	TANTALUM, CHIP 47uF 20% 16V
CN1	1-695-453-11	s	CONNECTOR, BOARD TO BOARD 50P
CN700	1-569-775-21	s	PIN, CONNECTOR (1.5MM)(SMD) 5P
CP600	1-760-347-21	s	VCO, CRYSTAL 27.000000MHz
D100	8-719-157-11	s	DIODE RD3.3M-B
D200	8-719-157-11	s	DIODE RD3.3M-B
D300	8-719-157-11	s	DIODE RD3.3M-B
D500-505	8-719-023-69	s	DIODE SB007T03Q
D700	8-719-989-22	s	LED CL-150R-CD, RED
D701	8-719-989-22	s	LED CL-150R-CD, RED
D702	8-719-938-72	s	DIODE SB01-05CP
D703	8-719-938-72	s	DIODE SB01-05CP
D704	8-719-938-72	s	DIODE SB01-05CP
D705	8-719-938-72	s	DIODE SB01-05CP
D710	8-719-941-86	s	DIODE DAN202U
D900	8-719-029-63	s	DIODE RD4.3UH-T1
D901	8-719-029-63	s	DIODE RD4.3UH-T1
D902	8-719-029-63	s	DIODE RD4.3UH-T1
D903	8-719-029-63	s	DIODE RD4.3UH-T1
FB100	1-543-309-21	s	BEAD, FERRITE
FB200	1-543-309-21	s	BEAD, FERRITE
FB300	1-543-309-21	s	BEAD, FERRITE
FB600	1-543-309-21	s	BEAD, FERRITE
FL100	1-233-433-11	s	FILTER, LOW-PASS
FL200	1-233-598-11	s	FILTER, LOW-PASS
FL300	1-233-598-11	s	FILTER, LOW-PASS
FL600	1-239-896-12	s	FILTER, EMI (SMD)
FL700	1-239-721-22	s	FILTER, LOW-PASS
IC1	8-759-987-27	s	IC LM1881M
IC2	8-759-186-53	s	IC TC74VHC163F
IC3	8-759-186-54	s	IC TC74VHC164F
IC4	8-759-186-54	s	IC TC74VHC164F
IC5	8-759-186-54	s	IC TC74VHC164F
IC10	8-759-196-97	s	IC TC7SH32FU-TE85R
IC11	8-759-186-53	s	IC TC74VHC163F
IC100	8-759-347-09	s	IC NJU7034V-TE2
IC101	8-759-234-77	s	IC TC4S66F
IC102	8-759-105-49	s	IC UPC319G2
IC103	8-759-710-88	s	IC NJM431U

http://getMANUAL.com

(IF-634 BOARD)

Ref. No. or Q'ty	Part No.	SP	Description
IC104	8-759-337-40	s	IC NJM2904V(TE2)
IC105	8-752-376-32	s	IC CXD2310AR
IC200	8-759-347-09	s	IC NJU7034V-TE2
IC201	8-759-234-77	s	IC TC4S66F
IC202	8-759-359-66	s	IC TL082CPW-E05
IC203	8-759-079-46	s	IC TC74VHC00FS(EL)
IC204	8-759-337-40	s	IC NJM2904V(TE2)
IC205	8-752-376-32	s	IC CXD2310AR
IC300	8-759-347-09	s	IC NJU7034V-TE2
IC301	8-759-234-77	s	IC TC4S66F
IC304	8-759-337-40	s	IC NJM2904V(TE2)
IC305	8-752-376-32	s	IC CXD2310AR
IC401	8-759-079-81	s	IC TC74VHC221AFS(EL)
IC402	8-759-054-61	s	IC CLC505AJE
IC403	8-759-079-85	s	IC TC74VHC244FS(EL)
IC404	8-759-079-83	s	IC TC74VHC240FS(EL)
IC405	8-759-359-66	s	IC TL082CPW-E05
IC406	8-759-079-79	s	IC TC74VHC174FS(EL)
IC407	8-759-702-08	s	IC NJM360M
IC408	8-759-702-08	s	IC NJM360M
IC409	8-759-079-79	s	IC TC74VHC174FS(EL)
IC410	8-759-082-61	s	IC TC4W53FU
IC412	8-759-080-06	s	IC TC74VHC574FS(EL)
IC414	8-759-080-06	s	IC TC74VHC574FS(EL)
IC418-425	8-759-080-06	s	IC TC74VHC574FS(EL)
IC500	8-759-196-96	s	IC TC7SH08FU-TE85R
IC501	8-759-050-50	s	IC SN74HCT04APW-E05
IC502	8-759-940-45	s	IC S-8054HN-CB
IC503	8-759-431-01	s	IC UPD78014GC-763-AB8
IC504	8-759-079-87	s	IC TC74VHC245FS(EL)
IC505	8-759-196-96	s	IC TC7SH08FU-TE85R
IC506	8-759-430-21	s	IC MSM6524GS-KR1
IC507	8-759-271-86	s	IC TC7SH04FU
IC510	8-759-175-79	s	IC CXD8818R
IC511	8-759-277-19	s	IC UPD485505G-35
IC512	8-759-277-19	s	IC UPD485505G-35
IC513	8-759-277-19	s	IC UPD485505G-35
IC515	8-759-196-96	s	IC TC7SH08FU-TE85R
IC516	8-759-271-86	s	IC TC7SH04FU
IC517	8-759-430-21	s	IC MSM6524GS-KR1
IC518	8-759-089-61	s	IC TC74HC4052AFS(EL)
IC519	8-759-089-61	s	IC TC74HC4052AFS(EL)
IC520	8-759-089-61	s	IC TC74HC4052AFS(EL)
IC521	8-759-089-61	s	IC TC74HC4052AFS(EL)
IC601	8-759-359-12	s	IC DS1000Z-100
IC602	8-759-079-49	s	IC TC74VHC04FS(EL)
IC603	8-759-295-09	s	IC TLC2932IPW
IC604	8-759-260-55	s	IC TLC272CPW-E05
IC605	8-752-360-90	s	IC CXD303-101Q
IC606	8-759-080-02	s	IC TC74VHC541FS(EL)
IC607	8-759-196-93	s	IC TC7SH00FU-TE85R
IC608	8-759-080-03	s	IC TC74VHCT541FS(EL)
IC609	8-759-080-03	s	IC TC74VHCT541FS(EL)
IC610	8-759-080-03	s	IC TC74VHCT541FS(EL)
IC611	8-759-080-03	s	IC TC74VHCT541FS(EL)
IC612	8-759-179-75	s	IC CXD8845Q
IC613	8-759-196-97	s	IC TC7SH32FU-TE85R
IC614	8-759-079-52	s	IC TC74VHC08FS(EL)

(IF-634 BOARD)

Ref. No. or Q'ty	Part No.	SP	Description
IC616	8-759-080-06	s	IC TC74VHC574FS(EL)
IC617	8-759-271-86	s	IC TC7SH04FU
IC618	8-759-082-61	s	IC TC4W53FU
IC621	8-759-271-86	s	IC TC7SH04FU
IC622	8-759-080-02	s	IC TC74VHC541FS(EL)
IC623	8-759-080-02	s	IC TC74VHC541FS(EL)
IC624	8-759-080-02	s	IC TC74VHC541FS(EL)
IC625	8-759-080-06	s	IC TC74VHC574FS(EL)
IC626	8-759-082-61	s	IC TC4W53FU
IC627	8-759-082-61	s	IC TC4W53FU
IC628	8-759-079-49	s	IC TC74VHC04FS(EL)
IC629	8-759-080-02	s	IC TC74VHC541FS(EL)
IC630	8-759-079-60	s	IC TC74VHC32FS(EL)
IC631	8-759-082-61	s	IC TC4W53FU
IC632	8-759-082-55	s	IC TC7W00FU
IC633	8-759-271-86	s	IC TC7SH04FU
IC634	8-759-271-86	s	IC TC7SH04FU
IC700	8-759-710-88	s	IC NJM431U
IC701	8-759-196-96	s	IC TC7SH08FU-TE85R
IC702	8-759-337-40	s	IC NJM2904V(TE2)
IC703	8-759-337-40	s	IC NJM2904V(TE2)
IC704	8-759-252-59	s	IC MAX202CSE
IC705	8-759-051-48	s	IC SN74HCT541APW-E05
IC706	8-759-337-40	s	IC NJM2904V(TE2)
IC707	8-759-337-40	s	IC NJM2904V(TE2)
IC708	8-759-399-50	s	IC UPD78P4026GC-3B9
IC709	8-759-079-52	s	IC TC74VHC08FS(EL)
IC710	8-759-271-86	s	IC TC7SH04FU
IC712	8-759-080-02	s	IC TC74VHC541FS(EL)
IC713	8-759-082-61	s	IC TC4W53FU
IC714	8-759-066-59	s	IC TC74HC4053AFS
IC716	8-759-066-59	s	IC TC74HC4053AFS
IC717	8-759-054-61	s	IC CLC505AJE
IC718	8-729-025-54	s	TRANSISTOR SI9958DY
IC719	8-759-054-61	s	IC CLC505AJE
IC721	8-759-082-61	s	IC TC4W53FU
IC724	8-759-196-96	s	IC TC7SH08FU-TE85R
IC725	8-759-050-50	s	IC SN74HCT04APW-E05
IC726	8-759-079-49	s	IC TC74VHC04FS(EL)
IC727	8-759-359-66	s	IC TL082CPW-E05
IC728	8-759-079-61	s	IC TC74VHC74FS(EL)
IC729	8-759-082-55	s	IC TC7W00FU
IC730	8-752-380-71	s	IC CXD1913Q
IC731	8-759-079-61	s	IC TC74VHC74FS(EL)
IC732	8-759-196-96	s	IC TC7SH08FU-TE85R
IC733	8-759-082-58	s	IC TC7W08FU
IC734	8-729-025-54	s	TRANSISTOR SI9958DY
IC851	8-759-079-81	s	IC TC74VHC221AFS(EL)
IC852	8-759-030-16	s	IC MC34182M
IC853	8-759-082-61	s	IC TC4W53FU
IC854	8-759-271-04	s	IC LT1252CS8
IC858	8-759-987-27	s	IC LM1881M
IC901	8-729-025-54	s	TRANSISTOR SI9958DY
IC903	8-759-710-88	s	IC NJM431U
IC904	8-759-076-06	s	IC TL064CPW
L600	1-410-393-11	s	INDUCTOR, CHIP 100uH
L601-606	1-410-803-31	s	INDUCTOR, CHIP 47nH
L700	1-410-803-31	s	INDUCTOR, CHIP 47nH
L701	1-410-803-31	s	INDUCTOR, CHIP 47nH

(IF-634 BOARD)

Ref. No. or Q'ty	Part No.	SP	Description
L704	1-410-385-11	s	INDUCTOR, CHIP 22uH
L900	1-410-737-31	s	INDUCTOR, CHIP 0.47uH
Q100	8-729-140-63	s	TRANSISTOR 2SA1611-M5M6
Q101-105	8-729-117-32	s	TRANSISTOR 2SC4177
Q106	8-729-140-63	s	TRANSISTOR 2SA1611-M5M6
Q200	8-729-140-63	s	TRANSISTOR 2SA1611-M5M6
Q201-205	8-729-117-32	s	TRANSISTOR 2SC4177
Q206	8-729-140-63	s	TRANSISTOR 2SA1611-M5M6
Q207	8-729-209-06	s	TRANSISTOR 2SC4213-A
Q208	8-729-209-06	s	TRANSISTOR 2SC4213-A
Q209	8-729-028-91	s	TRANSISTOR DTA144EUA-T106
Q300	8-729-140-63	s	TRANSISTOR 2SA1611-M5M6
Q301-305	8-729-117-32	s	TRANSISTOR 2SC4177
Q306	8-729-140-63	s	TRANSISTOR 2SA1611-M5M6
Q400	8-729-143-07	s	TRANSISTOR 2SA1610-YY33
Q401	8-729-143-07	s	TRANSISTOR 2SA1610-YY33
Q600	8-729-029-14	s	TRANSISTOR DTC144EUA-T106
Q700	8-729-029-14	s	TRANSISTOR DTC144EUA-T106
Q701	8-729-029-14	s	TRANSISTOR DTC144EUA-T106
Q702	8-729-028-91	s	TRANSISTOR DTA144EUA-T106
Q703	8-729-028-91	s	TRANSISTOR DTA144EUA-T106
Q704	8-729-028-91	s	TRANSISTOR DTA144EUA-T106
Q705	8-729-028-91	s	TRANSISTOR DTA144EUA-T106
Q706	8-729-117-32	s	TRANSISTOR 2SC4177
Q707	8-729-117-32	s	TRANSISTOR 2SC4177
Q708	8-729-403-29	s	TRANSISTOR XN6435
Q709	8-729-403-29	s	TRANSISTOR XN6435
Q710	8-729-028-91	s	TRANSISTOR DTA144EUA-T106
Q711	8-729-029-14	s	TRANSISTOR DTC144EUA-T106
Q712	8-729-402-19	s	TRANSISTOR XN6501
Q713	8-729-140-63	s	TRANSISTOR 2SA1611-M5M6
Q714	8-729-142-90	s	TRANSISTOR 2SK853-K5
Q715	8-729-403-29	s	TRANSISTOR XN6435
Q716	8-729-402-19	s	TRANSISTOR XN6501
Q717	8-729-403-32	s	TRANSISTOR XN6534
Q718	8-729-403-32	s	TRANSISTOR XN6534
Q719	8-729-117-32	s	TRANSISTOR 2SC4177
Q720	8-729-117-32	s	TRANSISTOR 2SC4177
Q721	8-729-140-63	s	TRANSISTOR 2SA1611-M5M6
Q722	8-729-028-91	s	TRANSISTOR DTA144EUA-T106
Q723	8-729-029-14	s	TRANSISTOR DTC144EUA-T106
Q900	8-729-029-14	s	TRANSISTOR DTC144EUA-T106
Q902	8-729-028-91	s	TRANSISTOR DTA144EUA-T106
Q904	8-729-029-14	s	TRANSISTOR DTC144EUA-T106
Q906	8-729-029-14	s	TRANSISTOR DTC144EUA-T106
Q907	8-729-029-14	s	TRANSISTOR DTC144EUA-T106
Q908	8-729-020-94	s	TRANSISTOR 2SA1314C-TE12L
Q909	8-729-808-42	s	TRANSISTOR 2SD1624-T
Q910	8-729-020-94	s	TRANSISTOR 2SA1314C-TE12L
Q911	8-729-808-42	s	TRANSISTOR 2SD1624-T
Q912	8-729-029-14	s	TRANSISTOR DTC144EUA-T106
Q913	8-729-824-34	s	TRANSISTOR 2SJ187
R1	1-216-855-11	s	METAL, CHIP 680K 5% 1/16W
R100	1-218-692-11	s	METAL, CHIP 1K 0.50% 1/16W
R101	1-218-660-11	s	METAL, CHIP 47 0.50% 1/16W
R102	1-218-680-11	s	METAL, CHIP 330 0.50% 1/16W
R105	1-218-672-11	s	METAL, CHIP 150 0.50% 1/16W
R106	1-218-672-11	s	METAL, CHIP 150 0.50% 1/16W

(IF-634 BOARD)

Ref. No. or Q'ty	Part No.	SP	Description
R107	1-218-692-11	s	METAL, CHIP 1K 0.50% 1/16W
R109	1-218-665-11	s	METAL, CHIP 75 0.50% 1/16W
R110	1-216-864-11	s	METAL, CHIP 0 5% 1/16W
R111	1-218-672-11	s	METAL, CHIP 150 0.50% 1/16W
R112	1-218-696-11	s	METAL, CHIP 1.5K 0.50% 1/16W
R113	1-218-676-11	s	METAL, CHIP 220 0.50% 1/16W
R114	1-218-708-11	s	METAL, CHIP 4.7K 0.50% 1/16W
R115	1-218-668-11	s	METAL, CHIP 100 0.50% 1/16W
R116	1-218-716-11	s	METAL, CHIP 10K 0.50% 1/16W
R117	1-216-857-11	s	METAL, CHIP 1M 5% 1/16W
R118	1-218-716-11	s	METAL, CHIP 10K 0.50% 1/16W
R119	1-218-684-11	s	METAL, CHIP 470 0.50% 1/16W
R120	1-218-724-11	s	METAL, CHIP 22K 0.50% 1/16W
R121	1-218-708-11	s	METAL, CHIP 4.7K 0.50% 1/16W
R122	1-218-692-11	s	METAL, CHIP 1K 0.50% 1/16W
R123	1-218-684-11	s	METAL, CHIP 470 0.50% 1/16W
R124	1-218-660-11	s	METAL, CHIP 47 0.50% 1/16W
R125	1-218-660-11	s	METAL, CHIP 47 0.50% 1/16W
R126	1-218-716-11	s	METAL, CHIP 10K 0.50% 1/16W
R127	1-218-716-11	s	METAL, CHIP 10K 0.50% 1/16W
R128	1-218-713-11	s	METAL, CHIP 7.5K 0.50% 1/16W
R129	1-218-716-11	s	METAL, CHIP 10K 0.50% 1/16W
R130	1-218-684-11	s	METAL, CHIP 470 0.50% 1/16W
R131	1-216-852-11	s	METAL, CHIP 390K 5% 1/16W
R132	1-218-737-11	s	METAL, CHIP 75K 0.50% 1/16W
R133	1-218-728-11	s	METAL, CHIP 33K 0.50% 1/16W
R134	1-218-726-11	s	METAL, CHIP 27K 0.50% 1/16W
R135	1-218-716-11	s	METAL, CHIP 10K 0.50% 1/16W
R136	1-218-716-11	s	METAL, CHIP 10K 0.50% 1/16W
R137	1-218-676-11	s	METAL, CHIP 220 0.50% 1/16W
R139	1-218-676-11	s	METAL, CHIP 220 0.50% 1/16W
R140	1-218-668-11	s	METAL, CHIP 100 0.50% 1/16W
R200	1-218-692-11	s	METAL, CHIP 1K 0.50% 1/16W
R201	1-218-681-11	s	METAL, CHIP 360 0.50% 1/16W
R202	1-218-660-11	s	METAL, CHIP 47 0.50% 1/16W
R203	1-218-684-11	s	METAL, CHIP 470 0.50% 1/16W
R204	1-218-680-11	s	METAL, CHIP 330 0.50% 1/16W
R205	1-218-680-11	s	METAL, CHIP 330 0.50% 1/16W
R206	1-218-692-11	s	METAL, CHIP 1K 0.50% 1/16W
R208	1-218-644-11	s	METAL, CHIP 10 0.50% 1/16W
R209	1-216-864-11	s	METAL, CHIP 0 5% 1/16W
R210	1-218-676-11	s	METAL, CHIP 220 0.50% 1/16W
R211	1-218-696-11	s	METAL, CHIP 1.5K 0.50% 1/16W
R212	1-218-676-11	s	METAL, CHIP 220 0.50% 1/16W
R213	1-218-708-11	s	METAL, CHIP 4.7K 0.50% 1/16W
R214	1-218-668-11	s	METAL, CHIP 100 0.50% 1/16W
R215	1-218-716-11	s	METAL, CHIP 10K 0.50% 1/16W
R216	1-216-857-11	s	METAL, CHIP 1M 5% 1/16W
R217	1-218-716-11	s	METAL, CHIP 10K 0.50% 1/16W
R218	1-218-684-11	s	METAL, CHIP 470 0.50% 1/16W
R219	1-218-724-11	s	METAL, CHIP 22K 0.50% 1/16W
R220	1-218-692-11	s	METAL, CHIP 1K 0.50% 1/16W
R221	1-218-684-11	s	METAL, CHIP 470 0.50% 1/16W
R222	1-218-660-11	s	METAL, CHIP 47 0.50% 1/16W
R223	1-218-668-11	s	METAL, CHIP 100 0.50% 1/16W
R224	1-218-710-11	s	METAL, CHIP 5.6K 0.50% 1/16W
R225	1-216-852-11	s	METAL, CHIP 390K 5% 1/16W
R226	1-218-737-11	s	METAL, CHIP 75K 0.50% 1/16W
R227	1-218-728-11	s	METAL, CHIP 33K 0.50% 1/16W

(IF-634 BOARD)

Ref. No. or Q'ty	Part No.	SP	Description
R228	1-218-684-11	s	METAL, CHIP 470 0.50% 1/16W
R229	1-218-684-11	s	METAL, CHIP 470 0.50% 1/16W
R230	1-218-716-11	s	METAL, CHIP 10K 0.50% 1/16W
R231	1-218-716-11	s	METAL, CHIP 10K 0.50% 1/16W
R232	1-218-684-11	s	METAL, CHIP 470 0.50% 1/16W
R233	1-218-676-11	s	METAL, CHIP 220 0.50% 1/16W
R235	1-218-676-11	s	METAL, CHIP 220 0.50% 1/16W
R236	1-218-716-11	s	METAL, CHIP 10K 0.50% 1/16W
R237	1-218-668-11	s	METAL, CHIP 100 0.50% 1/16W
R238	1-218-708-11	s	METAL, CHIP 4.7K 0.50% 1/16W
R239	1-218-694-11	s	METAL, CHIP 1.2K 0.50% 1/16W
R240	1-218-708-11	s	METAL, CHIP 4.7K 0.50% 1/16W
R241	1-218-694-11	s	METAL, CHIP 1.2K 0.50% 1/16W
R242	1-218-724-11	s	METAL, CHIP 22K 0.50% 1/16W
R300	1-218-692-11	s	METAL, CHIP 1K 0.50% 1/16W
R301	1-218-681-11	s	METAL, CHIP 360 0.50% 1/16W
R302	1-218-660-11	s	METAL, CHIP 47 0.50% 1/16W
R303	1-218-684-11	s	METAL, CHIP 470 0.50% 1/16W
R304	1-218-680-11	s	METAL, CHIP 330 0.50% 1/16W
R305	1-218-680-11	s	METAL, CHIP 330 0.50% 1/16W
R306	1-218-692-11	s	METAL, CHIP 1K 0.50% 1/16W
R308	1-218-644-11	s	METAL, CHIP 10 0.50% 1/16W
R309	1-216-864-11	s	METAL, CHIP 0 5% 1/16W
R310	1-218-676-11	s	METAL, CHIP 220 0.50% 1/16W
R311	1-218-696-11	s	METAL, CHIP 1.5K 0.50% 1/16W
R312	1-218-676-11	s	METAL, CHIP 220 0.50% 1/16W
R313	1-218-708-11	s	METAL, CHIP 4.7K 0.50% 1/16W
R314	1-218-668-11	s	METAL, CHIP 100 0.50% 1/16W
R315	1-218-716-11	s	METAL, CHIP 10K 0.50% 1/16W
R316	1-216-857-11	s	METAL, CHIP 1M 5% 1/16W
R317	1-218-716-11	s	METAL, CHIP 10K 0.50% 1/16W
R318	1-218-684-11	s	METAL, CHIP 470 0.50% 1/16W
R319	1-218-724-11	s	METAL, CHIP 22K 0.50% 1/16W
R320	1-218-692-11	s	METAL, CHIP 1K 0.50% 1/16W
R321	1-218-684-11	s	METAL, CHIP 470 0.50% 1/16W
R322	1-218-660-11	s	METAL, CHIP 47 0.50% 1/16W
R323	1-218-668-11	s	METAL, CHIP 100 0.50% 1/16W
R325	1-218-737-11	s	METAL, CHIP 75K 0.50% 1/16W
R326	1-216-852-11	s	METAL, CHIP 390K 5% 1/16W
R327	1-218-710-11	s	METAL, CHIP 5.6K 0.50% 1/16W
R328	1-218-726-11	s	METAL, CHIP 27K 0.50% 1/16W
R329	1-218-684-11	s	METAL, CHIP 470 0.50% 1/16W
R330	1-218-684-11	s	METAL, CHIP 470 0.50% 1/16W
R331	1-218-716-11	s	METAL, CHIP 10K 0.50% 1/16W
R332	1-218-716-11	s	METAL, CHIP 10K 0.50% 1/16W
R333	1-218-684-11	s	METAL, CHIP 470 0.50% 1/16W
R334	1-218-676-11	s	METAL, CHIP 220 0.50% 1/16W
R336	1-218-676-11	s	METAL, CHIP 220 0.50% 1/16W
R337	1-218-716-11	s	METAL, CHIP 10K 0.50% 1/16W
R338	1-218-668-11	s	METAL, CHIP 100 0.50% 1/16W
R400	1-218-702-11	s	METAL, CHIP 2.7K 0.50% 1/16W
R401	1-218-708-11	s	METAL, CHIP 4.7K 0.50% 1/16W
R402	1-218-700-11	s	METAL, CHIP 2.2K 0.50% 1/16W
R403	1-218-716-11	s	METAL, CHIP 10K 0.50% 1/16W
R404	1-216-863-11	s	METAL, CHIP 3.3M 5% 1/16W
R406	1-216-863-11	s	METAL, CHIP 3.3M 5% 1/16W
R407	1-218-692-11	s	METAL, CHIP 1K 0.50% 1/16W
R408	1-218-751-11	s	METAL, CHIP 300K 0.50% 1/16W
R409	1-218-700-11	s	METAL, CHIP 2.2K 0.50% 1/16W

(IF-634 BOARD)

Ref. No. or Q'ty	Part No.	SP	Description
R410	1-218-716-11	s	METAL, CHIP 10K 0.50% 1/16W
R411	1-216-857-11	s	METAL, CHIP 1M 5% 1/16W
R412	1-218-692-11	s	METAL, CHIP 1K 0.50% 1/16W
R413	1-218-702-11	s	METAL, CHIP 2.7K 0.50% 1/16W
R414	1-218-692-11	s	METAL, CHIP 1K 0.50% 1/16W
R415	1-218-684-11	s	METAL, CHIP 470 0.50% 1/16W
R416	1-218-684-11	s	METAL, CHIP 470 0.50% 1/16W
R417	1-218-684-11	s	METAL, CHIP 470 0.50% 1/16W
R422	1-216-864-11	s	METAL, CHIP 0 5% 1/16W
R429	1-216-864-11	s	METAL, CHIP 0 5% 1/16W
R432	1-218-660-11	s	METAL, CHIP 47 0.50% 1/16W
R500	1-218-708-11	s	METAL, CHIP 4.7K 0.50% 1/16W
R501	1-218-716-11	s	METAL, CHIP 10K 0.50% 1/16W
R502	1-218-740-11	s	METAL, CHIP 100K 0.50% 1/16W
R503	1-216-864-11	s	METAL, CHIP 0 5% 1/16W
R504	1-218-732-11	s	METAL, CHIP 47K 0.50% 1/16W
R505	1-218-732-11	s	METAL, CHIP 47K 0.50% 1/16W
R506	1-218-716-11	s	METAL, CHIP 10K 0.50% 1/16W
R507	1-218-740-11	s	METAL, CHIP 100K 0.50% 1/16W
R508	1-216-864-11	s	METAL, CHIP 0 5% 1/16W
R509	1-218-692-11	s	METAL, CHIP 1K 0.50% 1/16W
R510	1-218-692-11	s	METAL, CHIP 1K 0.50% 1/16W
R511	1-218-692-11	s	METAL, CHIP 1K 0.50% 1/16W
R512	1-218-716-11	s	METAL, CHIP 10K 0.50% 1/16W
R513	1-218-692-11	s	METAL, CHIP 1K 0.50% 1/16W
R515	1-216-864-11	s	METAL, CHIP 0 5% 1/16W
R516	1-218-660-11	s	METAL, CHIP 47 0.50% 1/16W
R517	1-218-692-11	s	METAL, CHIP 1K 0.50% 1/16W
R518	1-218-692-11	s	METAL, CHIP 1K 0.50% 1/16W
R519	1-218-692-11	s	METAL, CHIP 1K 0.50% 1/16W
R521	1-218-692-11	s	METAL, CHIP 1K 0.50% 1/16W
R522	1-218-716-11	s	METAL, CHIP 10K 0.50% 1/16W
R601	1-216-864-11	s	METAL, CHIP 0 5% 1/16W
R605	1-218-740-11	s	METAL, CHIP 100K 0.50% 1/16W
R606	1-216-857-11	s	METAL, CHIP 1M 5% 1/16W
R608	1-218-692-11	s	METAL, CHIP 1K 0.50% 1/16W
R609	1-218-740-11	s	METAL, CHIP 100K 0.50% 1/16W
R610	1-218-724-11	s	METAL, CHIP 22K 0.50% 1/16W
R611	1-218-724-11	s	METAL, CHIP 22K 0.50% 1/16W
R612	1-218-740-11	s	METAL, CHIP 100K 0.50% 1/16W
R613	1-218-708-11	s	METAL, CHIP 4.7K 0.50% 1/16W
R614	1-218-719-11	s	METAL, CHIP 13K 0.50% 1/16W
R615	1-216-864-11	s	METAL, CHIP 0 5% 1/16W
R617	1-216-864-11	s	METAL, CHIP 0 5% 1/16W
R618	1-216-864-11	s	METAL, CHIP 0 5% 1/16W
R619	1-216-864-11	s	METAL, CHIP 0 5% 1/16W
R620	1-216-864-11	s	METAL, CHIP 0 5% 1/16W
R637	1-218-668-11	s	METAL, CHIP 100 0.50% 1/16W
R638	1-218-748-11	s	METAL, CHIP 220K 0.50% 1/16W
R639	1-218-692-11	s	METAL, CHIP 1K 0.50% 1/16W
R641	1-218-660-11	s	METAL, CHIP 47 0.50% 1/16W
R642	1-218-668-11	s	METAL, CHIP 100 0.50% 1/16W
R643	1-216-864-11	s	METAL, CHIP 0 5% 1/16W
R644	1-216-864-11	s	METAL, CHIP 0 5% 1/16W
R675	1-218-716-11	s	METAL, CHIP 10K 0.50% 1/16W
R678	1-216-864-11	s	METAL, CHIP 0 5% 1/16W
R685	1-218-666-11	s	METAL, CHIP 82 0.50% 1/16W
R687	1-218-684-11	s	METAL, CHIP 470 0.50% 1/16W
R689	1-218-716-11	s	METAL, CHIP 10K 0.50% 1/16W

(IF-634 BOARD)

Ref. No. or Q'ty	Part No.	SP	Description
R690-697	1-218-748-11	s	METAL, CHIP 220K 0.50% 1/16W
R698	1-218-740-11	s	METAL, CHIP 100K 0.50% 1/16W
R699	1-218-740-11	s	METAL, CHIP 100K 0.50% 1/16W
R700-705	1-218-692-11	s	METAL, CHIP 1K 0.50% 1/16W
R706	1-218-680-11	s	METAL, CHIP 330 0.50% 1/16W
R707	1-218-680-11	s	METAL, CHIP 330 0.50% 1/16W
R708	1-218-716-11	s	METAL, CHIP 10K 0.50% 1/16W
R709	1-218-716-11	s	METAL, CHIP 10K 0.50% 1/16W
R710	1-218-692-11	s	METAL, CHIP 1K 0.50% 1/16W
R711	1-218-716-11	s	METAL, CHIP 10K 0.50% 1/16W
R712	1-218-692-11	s	METAL, CHIP 1K 0.50% 1/16W
R713	1-218-692-11	s	METAL, CHIP 1K 0.50% 1/16W
R714	1-218-740-11	s	METAL, CHIP 100K 0.50% 1/16W
R715	1-218-716-11	s	METAL, CHIP 10K 0.50% 1/16W
R716	1-218-704-11	s	METAL, CHIP 3.3K 0.50% 1/16W
R717	1-218-740-11	s	METAL, CHIP 100K 0.50% 1/16W
R718	1-218-740-11	s	METAL, CHIP 100K 0.50% 1/16W
R719	1-218-733-11	s	METAL, CHIP 51K 0.50% 1/16W
R720	1-218-740-11	s	METAL, CHIP 100K 0.50% 1/16W
R721	1-218-740-11	s	METAL, CHIP 100K 0.50% 1/16W
R722	1-218-680-11	s	METAL, CHIP 330 0.50% 1/16W
R723	1-218-680-11	s	METAL, CHIP 330 0.50% 1/16W
R724	1-216-864-11	s	METAL, CHIP 0 5% 1/16W
R725	1-218-740-11	s	METAL, CHIP 100K 0.50% 1/16W
R726	1-218-740-11	s	METAL, CHIP 100K 0.50% 1/16W
R727	1-218-692-11	s	METAL, CHIP 1K 0.50% 1/16W
R728	1-218-700-11	s	METAL, CHIP 2.2K 0.50% 1/16W
R729	1-218-708-11	s	METAL, CHIP 4.7K 0.50% 1/16W
R730	1-218-716-11	s	METAL, CHIP 10K 0.50% 1/16W
R731	1-216-864-11	s	METAL, CHIP 0 5% 1/16W
R732	1-218-740-11	s	METAL, CHIP 100K 0.50% 1/16W
R733	1-218-692-11	s	METAL, CHIP 1K 0.50% 1/16W
R734	1-218-700-11	s	METAL, CHIP 2.2K 0.50% 1/16W
R735	1-218-704-11	s	METAL, CHIP 3.3K 0.50% 1/16W
R736	1-218-740-11	s	METAL, CHIP 100K 0.50% 1/16W
R737	1-216-864-11	s	METAL, CHIP 0 5% 1/16W
R738	1-218-692-11	s	METAL, CHIP 1K 0.50% 1/16W
R739	1-218-740-11	s	METAL, CHIP 100K 0.50% 1/16W
R740	1-218-668-11	s	METAL, CHIP 100 0.50% 1/16W
R741	1-218-740-11	s	METAL, CHIP 100K 0.50% 1/16W
R742	1-218-740-11	s	METAL, CHIP 100K 0.50% 1/16W
R743	1-218-748-11	s	METAL, CHIP 220K 0.50% 1/16W
R744	1-218-740-11	s	METAL, CHIP 100K 0.50% 1/16W
R745	1-218-740-11	s	METAL, CHIP 100K 0.50% 1/16W
R746	1-216-864-11	s	METAL, CHIP 0 5% 1/16W
R747	1-218-692-11	s	METAL, CHIP 1K 0.50% 1/16W
R748	1-218-716-11	s	METAL, CHIP 10K 0.50% 1/16W
R749	1-218-732-11	s	METAL, CHIP 47K 0.50% 1/16W
R750	1-218-740-11	s	METAL, CHIP 100K 0.50% 1/16W
R751	1-218-740-11	s	METAL, CHIP 100K 0.50% 1/16W
R752	1-218-740-11	s	METAL, CHIP 100K 0.50% 1/16W
R753	1-218-692-11	s	METAL, CHIP 1K 0.50% 1/16W
R754	1-218-692-11	s	METAL, CHIP 1K 0.50% 1/16W
R755	1-218-740-11	s	METAL, CHIP 100K 0.50% 1/16W
R756	1-218-740-11	s	METAL, CHIP 100K 0.50% 1/16W
R757	1-218-720-11	s	METAL, CHIP 15K 0.50% 1/16W
R758	1-218-740-11	s	METAL, CHIP 100K 0.50% 1/16W
R759	1-216-864-11	s	METAL, CHIP 0 5% 1/16W
R763	1-218-679-91	s	METAL, CHIP 300 0.50% 1/16W

(IF-634 BOARD)

Ref. No. or Q'ty	Part No.	SP	Description
R764	1-218-716-11	s	METAL, CHIP 10K 0.50% 1/16W
R765	1-216-864-11	s	METAL, CHIP 0 5% 1/16W
R766	1-218-720-11	s	METAL, CHIP 15K 0.50% 1/16W
R767	1-218-692-11	s	METAL, CHIP 1K 0.50% 1/16W
R768	1-218-692-11	s	METAL, CHIP 1K 0.50% 1/16W
R769	1-218-687-11	s	METAL, CHIP 620 0.50% 1/16W
R770	1-218-672-11	s	METAL, CHIP 150 0.50% 1/16W
R771	1-218-708-11	s	METAL, CHIP 4.7K 0.50% 1/16W
R772	1-218-672-11	s	METAL, CHIP 150 0.50% 1/16W
R773	1-218-708-11	s	METAL, CHIP 4.7K 0.50% 1/16W
R774	1-218-679-91	s	METAL, CHIP 300 0.50% 1/16W
R775	1-218-679-91	s	METAL, CHIP 300 0.50% 1/16W
R776	1-218-710-11	s	METAL, CHIP 5.6K 0.50% 1/16W
R777	1-218-692-11	s	METAL, CHIP 1K 0.50% 1/16W
R778	1-218-692-11	s	METAL, CHIP 1K 0.50% 1/16W
R779	1-218-708-11	s	METAL, CHIP 4.7K 0.50% 1/16W
R780	1-218-708-11	s	METAL, CHIP 4.7K 0.50% 1/16W
R781	1-216-864-11	s	METAL, CHIP 0 5% 1/16W
R782	1-216-864-11	s	METAL, CHIP 0 5% 1/16W
R783	1-218-668-11	s	METAL, CHIP 100 0.50% 1/16W
R784	1-218-740-11	s	METAL, CHIP 100K 0.50% 1/16W
R785	1-218-708-11	s	METAL, CHIP 4.7K 0.50% 1/16W
R786	1-218-708-11	s	METAL, CHIP 4.7K 0.50% 1/16W
R787	1-218-668-11	s	METAL, CHIP 100 0.50% 1/16W
R788	1-216-864-11	s	METAL, CHIP 0 5% 1/16W
R789	1-218-710-11	s	METAL, CHIP 5.6K 0.50% 1/16W
R790	1-218-740-11	s	METAL, CHIP 100K 0.50% 1/16W
R791	1-218-708-11	s	METAL, CHIP 4.7K 0.50% 1/16W
R792	1-218-692-11	s	METAL, CHIP 1K 0.50% 1/16W
R793	1-218-740-11	s	METAL, CHIP 100K 0.50% 1/16W
R794	1-218-692-11	s	METAL, CHIP 1K 0.50% 1/16W
R795	1-218-720-11	s	METAL, CHIP 15K 0.50% 1/16W
R796	1-218-720-11	s	METAL, CHIP 15K 0.50% 1/16W
R797	1-218-708-11	s	METAL, CHIP 4.7K 0.50% 1/16W
R798	1-218-692-11	s	METAL, CHIP 1K 0.50% 1/16W
R799	1-218-712-11	s	METAL, CHIP 6.8K 0.50% 1/16W
R800	1-218-716-11	s	METAL, CHIP 10K 0.50% 1/16W
R801	1-218-740-11	s	METAL, CHIP 100K 0.50% 1/16W
R802	1-218-706-11	s	METAL, CHIP 3.9K 0.50% 1/16W
R803	1-218-732-11	s	METAL, CHIP 47K 0.50% 1/16W
R804	1-218-692-11	s	METAL, CHIP 1K 0.50% 1/16W
R805	1-218-732-11	s	METAL, CHIP 47K 0.50% 1/16W
R806	1-218-708-11	s	METAL, CHIP 4.7K 0.50% 1/16W
R807	1-218-732-11	s	METAL, CHIP 47K 0.50% 1/16W
R808	1-218-732-11	s	METAL, CHIP 47K 0.50% 1/16W
R809	1-218-672-11	s	METAL, CHIP 150 0.50% 1/16W
R810	1-218-740-11	s	METAL, CHIP 100K 0.50% 1/16W
R811	1-218-668-11	s	METAL, CHIP 100 0.50% 1/16W
R812	1-218-705-11	s	METAL, CHIP 3.6K 0.50% 1/16W
R813	1-218-692-11	s	METAL, CHIP 1K 0.50% 1/16W
R814	1-218-708-11	s	METAL, CHIP 4.7K 0.50% 1/16W
R815	1-218-692-11	s	METAL, CHIP 1K 0.50% 1/16W
R817	1-218-694-11	s	METAL, CHIP 1.2K 0.50% 1/16W
R818	1-218-730-11	s	METAL, CHIP 39K 0.50% 1/16W
R819	1-218-665-11	s	METAL, CHIP 75 0.50% 1/16W
R820	1-218-665-11	s	METAL, CHIP 75 0.50% 1/16W
R821	1-218-730-11	s	METAL, CHIP 39K 0.50% 1/16W
R822	1-218-665-11	s	METAL, CHIP 75 0.50% 1/16W
R823	1-218-706-11	s	METAL, CHIP 3.9K 0.50% 1/16W

(IF-634 BOARD)

Ref. No. or Q'ty	Part No.	SP	Description
R824	1-218-710-11	s	METAL, CHIP 5.6K 0.50% 1/16W
R825	1-218-686-11	s	METAL, CHIP 560 0.50% 1/16W
R826	1-218-692-11	s	METAL, CHIP 1K 0.50% 1/16W
R827	1-218-716-11	s	METAL, CHIP 10K 0.50% 1/16W
R828	1-218-708-11	s	METAL, CHIP 4.7K 0.50% 1/16W
R829	1-218-664-11	s	METAL, CHIP 68 0.50% 1/16W
R831	1-218-665-11	s	METAL, CHIP 75 0.50% 1/16W
R834	1-218-740-11	s	METAL, CHIP 100K 0.50% 1/16W
R839	1-218-748-11	s	METAL, CHIP 220K 0.50% 1/16W
R840	1-218-748-11	s	METAL, CHIP 220K 0.50% 1/16W
R851	1-218-706-11	s	METAL, CHIP 3.9K 0.50% 1/16W
R852	1-218-718-11	s	METAL, CHIP 12K 0.50% 1/16W
R853	1-218-692-11	s	METAL, CHIP 1K 0.50% 1/16W
R854	1-218-692-11	s	METAL, CHIP 1K 0.50% 1/16W
R855	1-218-708-11	s	METAL, CHIP 4.7K 0.50% 1/16W
R856	1-218-694-11	s	METAL, CHIP 1.2K 0.50% 1/16W
R857	1-216-863-11	s	METAL, CHIP 3.3M 5% 1/16W
R859	1-218-730-11	s	METAL, CHIP 39K 0.50% 1/16W
R860	1-218-706-11	s	METAL, CHIP 3.9K 0.50% 1/16W
R861	1-218-712-11	s	METAL, CHIP 6.8K 0.50% 1/16W
R867	1-216-855-11	s	METAL, CHIP 680K 5% 1/16W
R900	1-218-740-11	s	METAL, CHIP 100K 0.50% 1/16W
R902	1-218-740-11	s	METAL, CHIP 100K 0.50% 1/16W
R904	1-218-716-11	s	METAL, CHIP 10K 0.50% 1/16W
R905	1-218-716-11	s	METAL, CHIP 10K 0.50% 1/16W
R908	1-218-740-11	s	METAL, CHIP 100K 0.50% 1/16W
R909	1-218-716-11	s	METAL, CHIP 10K 0.50% 1/16W
R910	1-218-688-11	s	METAL, CHIP 680 0.50% 1/16W
R911	1-218-740-11	s	METAL, CHIP 100K 0.50% 1/16W
R912	1-216-864-11	s	METAL, CHIP 0 5% 1/16W
R913	1-218-724-11	s	METAL, CHIP 22K 0.50% 1/16W
R914	1-218-702-11	s	METAL, CHIP 2.7K 0.50% 1/16W
R915	1-218-724-11	s	METAL, CHIP 22K 0.50% 1/16W
R916	1-218-724-11	s	METAL, CHIP 22K 0.50% 1/16W
R917	1-218-702-11	s	METAL, CHIP 2.7K 0.50% 1/16W
R918	1-218-724-11	s	METAL, CHIP 22K 0.50% 1/16W
R919	1-218-732-11	s	METAL, CHIP 47K 0.50% 1/16W
R920	1-218-732-11	s	METAL, CHIP 47K 0.50% 1/16W
R921	1-218-732-11	s	METAL, CHIP 47K 0.50% 1/16W
R922	1-218-732-11	s	METAL, CHIP 47K 0.50% 1/16W
R932	1-216-864-11	s	METAL, CHIP 0 5% 1/16W
R934	1-216-864-11	s	METAL, CHIP 0 5% 1/16W
RB500	1-236-907-11	s	NETWORK RESISTOR (CHIP) 100K
RB501	1-239-389-11	s	NWTWORK RESISTOR (CHIP) 47K
RB600	1-239-309-11	s	RESISTOR BLOCK, CHIP 100kx8
RB601	1-239-309-11	s	RESISTOR BLOCK, CHIP 100kx8
RB602	1-239-409-11	s	NETWORK RESISTOR (CHIP) 47
RB603	1-239-409-11	s	NETWORK RESISTOR (CHIP) 47
RB604	1-239-409-11	s	NETWORK RESISTOR (CHIP) 47
RB605	1-239-409-11	s	NETWORK RESISTOR (CHIP) 47
RB700	1-236-904-11	s	NETWORK RESISTOR (CHIP) 1.0K
RB701	1-239-430-11	s	NETWORK RESISTOR (CHIP) 4.7K
RB702	1-236-904-11	s	NETWORK RESISTOR (CHIP) 1.0K
RB703	1-236-904-11	s	NETWORK RESISTOR (CHIP) 1.0K
RB704	1-239-309-11	s	RESISTOR BLOCK, CHIP 100kx8
S700	1-692-271-21	s	SWITCH, SLIDE
X700	1-760-272-11	s	CRYSTAL 13.500000MHz

IO-117 BOARD

Ref. No. or Q'ty	Part No.	SP	Description
1pc	1-662-338-11	o	PRINTED CIRCUIT BOARD, IO-117
1pc	3-603-545-01	o	SUPPOT A,BNC CONNECTOR
C1	1-115-339-11	s	CERAMIC 0.1uF 10% 50V
CN2	1-766-380-11	s	CONNECTOR, COAXIAL
CN3	1-766-381-11	s	CONNECTOR, COAXIAL
CN4	1-766-381-11	s	CONNECTOR, COAXIAL
CN5	1-766-381-11	s	CONNECTOR, COAXIAL
FL1-5	1-239-896-12	s	FILTER, EMI (SMD)
R1	1-216-295-91	s	RES, CHIP 0
R2	1-216-295-91	s	RES, CHIP 0
R3	1-216-295-91	s	RES, CHIP 0
VDR1	1-806-497-00	s	VARISTOR ERZ-C05DK220

KY-293 BOARD

Ref. No. or Q'ty	Part No.	SP	Description
1pc	1-652-769-12	o	PRINTED CIRCUIT BOARD, KY-293
R101	1-216-045-00	s	METAL, CHIP 680 5% 1/10W
R102	1-216-045-00	s	METAL, CHIP 680 5% 1/10W
R103	1-216-045-00	s	METAL, CHIP 680 5% 1/10W
S101-105	1-572-725-11	s	SWITCH, PUSH

LP-86 BOARD *For DNW-7/7P/90/90P/90WS/90WSP only

Ref. No. or Q'ty	Part No.	SP	Description
1pc	1-662-330-11	o	PRINTED CIRCUIT BOARD, LP-86
1pc	2-358-583-01	o	HOLDER, LED
C101	1-115-339-11	s	CERAMIC 0.1uF 10% 50V
CN101	1-565-874-11	s	CONNECTOR, PC BOARD 2P, MALE
D101	8-719-032-78	s	LED GL3UR8, RED
R101	1-218-684-11	s	METAL, CHIP 470 0.50% 1/16W
S101	1-570-608-11	s	SWITCH, TOGGLE

```
------------
LP-102 BOARD  *For DNV-5 only
------------
Ref. No.
or Q'ty  Part No.    SP Description

1pc      1-662-475-11 o PRINTED CIRCUIT BOARD, LP-102

C1       1-115-339-11 s CERAMIC 0.1uF 10% 50V
C2       1-115-339-11 s CERAMIC 0.1uF 10% 50V

CN1      1-580-055-21 s PIN, CONNECTOR (1.5MM)(SMD) 2P

D1       8-719-032-78 s LED GL3UR8, RED
D2       8-719-032-78 s LED GL3UR8, RED

R1       1-208-774-11 s METAL, CHIP 470 0.50% 1/10W

S1       1-570-608-11 s SWITCH, TOGGLE
```

```
-----------
MA-68 BOARD  *For DNW-7/7P/90/90P/90WS/90WSP only
-----------
Ref. No.
or Q'ty  Part No.    SP Description

1pc      1-662-329-11 o PRINTED CIRCUIT BOARD, MA-68

C101     1-163-133-00 s CERAMIC, CHIP 470PF 5% 50V
C102     1-163-133-00 s CERAMIC, CHIP 470PF 5% 50V
C111     1-163-251-11 s CERAMIC, CHIP 100PF 5% 50V
C112     1-163-251-11 s CERAMIC, CHIP 100PF 5% 50V

CN1      1-766-386-11 s CONNECTOR, XLR 3P, FEMALE
CN100    1-565-875-11 o CONNECTOR 3P, MALE

L101     1-412-137-11 s INDUCTOR 10uH
L102     1-412-137-11 s INDUCTOR 10uH
```

```
----------------
MB-627/627A BOARD
----------------
Ref. No.
or Q'ty  Part No.    SP Description

1pc      A-8277-537-A o MOUNTED CIRCUIT BOARD, MB-627A
                        [For DNV-5]
         A-8277-568-A o MOUNTED CIRCUIT BOARD, MB-627
                        [Except DNV-5]

1pc      7-623-507-01 s LUG, 2.6
1pc      3-603-653-01 o COVER,HARNESS
2pcs     3-603-655-01 o SHIELD FINGER(MB-A)
2pcs     3-603-654-01 o SPACER(MB)
3pcs     3-701-437-31 s WASHER

14pcs    3-729-061-01 s SCREW M2X4.5 (TYPE 1)

C1       1-164-232-11 s CERAMIC, CHIP 0.01uF 10% 100V
C2       1-164-232-11 s CERAMIC, CHIP 0.01uF 10% 100V
C3       1-164-232-11 s CERAMIC, CHIP 0.01uF 10% 100V
C4       1-126-934-11 s ELECT 220uF 20% 16V
C14      1-164-346-11 s CERAMIC 1uF 16V

C53      1-164-346-11 s CERAMIC 1uF 16V
C55      1-164-346-11 s CERAMIC 1uF 16V
C57      1-164-346-11 s CERAMIC 1uF 16V
C58      1-164-346-11 s CERAMIC 1uF 16V

CN1      1-691-845-11 o CONNECTOR, BOARD TO BOARD 50P
CN3      1-691-845-11 o CONNECTOR, BOARD TO BOARD 50P
CN5      1-778-531-11 o CONNECTOR, BOARD TO BOARD 80P
CN6      1-691-845-11 o CONNECTOR, BOARD TO BOARD 50P
CN20     1-778-542-11 o CONNECTOR, BOARD TO BOARD 52P

CN22     1-764-441-21 s CONNECTOR, FPC 30P
CN23     1-764-441-21 s CONNECTOR, FPC 30P
CN25     1-766-383-11 o PIN, CONNECTOR (1.5MM)(SMD) 12P
CN26     1-766-382-11 o PIN, CONNECTOR (1.5MM)(SMD) 10P
                        [Except DNV-5]

CN27     1-580-057-11 s PIN, CONNECTOR (1.5MM)(SMD) 4P
                        [For DNV-5]

CN30     1-695-223-21 s PIN, CONNECTOR (1.5MM)(SMD) 10P
CN31     1-580-789-21 s PIN, CONNECTOR (1.5MM)(SMD) 6P
CN32     1-580-055-21 s PIN, CONNECTOR (1.5MM)(SMD) 2P
CN33     1-764-085-21 o CONNECTOR, PC BOARD 13P, MALE
CN34     1-778-552-11 o CONNECTOR, 30P, MALE

CN35     1-778-551-11 o CONNECTOR, 20P, MALE
CN50     1-691-550-11 s PIN, CONNECTOR (1.5MM)(SMD) 3P
CN51     1-695-320-21 o PIN, CONNECTOR (1.5MM)(SMD) 2P
CN52     1-573-768-21 s PIN, CONNECTOR (1.5MM)(SMD) 5P
CN53     1-778-534-11 o CONNECTOR, FFC (ZIF) 45P

CN54     1-695-320-21 o PIN, CONNECTOR (1.5MM)(SMD) 2P

L1       1-410-389-31 s INDUCTOR CHIP 47uH
L2       1-410-389-31 s INDUCTOR CHIP 47uH

R5       1-216-295-91 s RES, CHIP 0
R10      1-216-295-91 s RES, CHIP 0 [For DNV-5]
R11      1-216-295-91 s RES, CHIP 0 [For DNV-5]
R12      1-216-295-91 s RES, CHIP 0 [For DNV-5]
R13      1-216-295-91 s RES, CHIP 0 [For DNV-5]

R14      1-216-295-91 s RES, CHIP 0 [Except DNV-5]
R15      1-216-295-91 s RES, CHIP 0 [For DNV-5]
R16      1-216-619-11 s METAL, CHIP 47 0.5% 1/10W
R17      1-216-295-91 s RES, CHIP 0 [For DNV-5]
R18      1-216-295-91 s RES, CHIP 0

RB1      1-239-711-11 s NETWORK RESISTOR (CHIP) 0
                        [For DNV-5]
```

MDC-5 BOARD

Ref. No. or Q'ty	Part No.	SP	Description
1pc	A-8277-536-A	o	MOUNTED CIRCUIT BOARD, MDC-5
2pcs	3-603-676-01	o	HOLDER,GP2S09
C100	1-115-419-11	s	CERAMIC, CHIP 3300PF 5% 25V
C101	1-115-419-11	s	CERAMIC, CHIP 3300PF 5% 25V
C102	1-115-419-11	s	CERAMIC, CHIP 3300PF 5% 25V
C103	1-162-927-11	s	CERAMIC, CHIP 100PF 5% 50V
C104	1-135-212-21	s	TANTALUM 2.2uF 10% 35V
C105	1-104-608-11	s	ELECT, CHIP 33uF 20% 6.3V
C106	1-104-608-11	s	ELECT, CHIP 33uF 20% 6.3V
C108	1-164-227-11	s	CERAMIC, CHIP 0.022uF 10% 25V
C109	1-164-227-11	s	CERAMIC, CHIP 0.022uF 10% 25V
C110	1-165-176-11	s	CERAMIC 0.047uF 10% 16V
C111	1-165-176-11	s	CERAMIC 0.047uF 10% 16V
C112	1-162-957-11	s	CERAMIC, CHIP 220PF 5% 50V
C113-118	1-164-227-11	s	CERAMIC, CHIP 0.022uF 10% 25V
C119	1-162-964-11	s	CERAMIC, CHIP 0.001uF 10% 50V
C120-125	1-164-227-11	s	CERAMIC, CHIP 0.022uF 10% 25V
C126	1-162-927-11	s	CERAMIC, CHIP 100PF 5% 50V
C127	1-164-227-11	s	CERAMIC, CHIP 0.022uF 10% 25V
C128	1-164-227-11	s	CERAMIC, CHIP 0.022uF 10% 25V
C129	1-162-964-11	s	CERAMIC, CHIP 0.001uF 10% 50V
C130	1-162-927-11	s	CERAMIC, CHIP 100PF 5% 50V
C131	1-164-227-11	s	CERAMIC, CHIP 0.022uF 10% 25V
C132	1-164-227-11	s	CERAMIC, CHIP 0.022uF 10% 25V
C133	1-162-964-11	s	CERAMIC, CHIP 0.001uF 10% 50V
C134	1-164-227-11	s	CERAMIC, CHIP 0.022uF 10% 25V
C135	1-162-964-11	s	CERAMIC, CHIP 0.001uF 10% 50V
C136	1-164-227-11	s	CERAMIC, CHIP 0.022uF 10% 25V
C137	1-164-227-11	s	CERAMIC, CHIP 0.022uF 10% 25V
C138	1-107-689-21	s	TANTALUM, CHIP 1uF 20% 35V
C139	1-107-689-21	s	TANTALUM, CHIP 1uF 20% 35V
C140	1-164-227-11	s	CERAMIC, CHIP 0.022uF 10% 25V
C147	1-164-227-11	s	CERAMIC, CHIP 0.022uF 10% 25V
C150	1-126-394-11	s	ELECT, CHIP 10uF 20% 16V
C153	1-164-227-11	s	CERAMIC, CHIP 0.022uF 10% 25V
C155	1-162-913-11	s	CERAMIC, CHIP 8PF 50V
C157	1-162-913-11	s	CERAMIC, CHIP 8PF 50V
C160	1-164-227-11	s	CERAMIC, CHIP 0.022uF 10% 25V
C166	1-164-227-11	s	CERAMIC, CHIP 0.022uF 10% 25V
C175	1-164-227-11	s	CERAMIC, CHIP 0.022uF 10% 25V
C176	1-162-913-11	s	CERAMIC, CHIP 8PF 50V
C177	1-162-913-11	s	CERAMIC, CHIP 8PF 50V
C178	1-107-826-11	s	CERAMIC, CHIP 0.1uF 10% 16V
C179	1-164-227-11	s	CERAMIC, CHIP 0.022uF 10% 25V
C180	1-164-227-11	s	CERAMIC, CHIP 0.022uF 10% 25V
C181	1-135-155-21	s	TANTALUM, CHIP 4.7uF 10% 16V
C182	1-164-227-11	s	CERAMIC, CHIP 0.022uF 10% 25V
C183	1-164-227-11	s	CERAMIC, CHIP 0.022uF 10% 25V
C184	1-164-227-11	s	CERAMIC, CHIP 0.022uF 10% 25V
C185	1-164-227-11	s	CERAMIC, CHIP 0.022uF 10% 25V
C186	1-135-072-21	s	TANTALUM, CHIP 0.22uF 10% 35V
C187-193	1-164-227-11	s	CERAMIC, CHIP 0.022uF 10% 25V
C300-305	1-107-826-11	s	CERAMIC, CHIP 0.1uF 10% 16V
C306	1-135-212-21	s	TANTALUM 2.2uF 10% 35V
C307	1-135-212-21	s	TANTALUM 2.2uF 10% 35V
C308	1-135-212-21	s	TANTALUM 2.2uF 10% 35V
C309	1-164-227-11	s	CERAMIC, CHIP 0.022uF 10% 25V
C310	1-107-826-11	s	CERAMIC, CHIP 0.1uF 10% 16V

(MDC-5 BOARD)

Ref. No. or Q'ty	Part No.	SP	Description
C311	1-162-968-11	s	CERAMIC, CHIP 0.0047uF 10% 50V
C312	1-162-968-11	s	CERAMIC, CHIP 0.0047uF 10% 50V
C313	1-162-968-11	s	CERAMIC, CHIP 0.0047uF 10% 50V
C314	1-162-970-11	s	CERAMIC, CHIP 0.01uF 10% 25V
C315	1-104-552-11	s	FILM, CHIP 0.012uF 5% 16V
C316	1-107-826-11	s	CERAMIC, CHIP 0.1uF 10% 16V
C317	1-135-318-11	s	TANTALUM, CHIP 33uF 20% 4V
C318	1-126-395-11	s	ELECT, CHIP 22uF 20% 16V
C319	1-162-968-11	s	CERAMIC, CHIP 0.0047uF 10% 50V
C320	1-135-318-11	s	TANTALUM, CHIP 33uF 20% 4V
C321	1-135-201-11	s	TANTALUM, CHIP 10uF 20% 6.3V
C322	1-162-927-11	s	CERAMIC, CHIP 100PF 5% 50V
C323	1-109-898-11	s	CERAMIC, CHIP 0.018uF 5% 100V
C324	1-109-897-11	s	CERAMIC, CHIP 0.015uF 5% 100V
C325	1-107-689-21	s	TANTALUM, CHIP 1uF 20% 35V
C326	1-164-227-11	s	CERAMIC, CHIP 0.022uF 10% 25V
C327	1-164-227-11	s	CERAMIC, CHIP 0.022uF 10% 25V
C328	1-107-823-11	s	CERAMIC 0.47uF 10% 16V
C329	1-107-823-11	s	CERAMIC 0.47uF 10% 16V
C500	1-162-923-11	s	CERAMIC, CHIP 47PF 5% 50V
C501	1-162-966-11	s	CERAMIC, CHIP 0.0022uF 10% 50V
C502	1-164-315-11	s	CERAMIC, CHIP 470PF 5% 50V
C503	1-135-155-21	s	TANTALUM, CHIP 4.7uF 10% 16V
C504	1-107-826-11	s	CERAMIC, CHIP 0.1uF 10% 16V
C506	1-164-227-11	s	CERAMIC, CHIP 0.022uF 10% 25V
C507	1-162-970-11	s	CERAMIC, CHIP 0.01uF 10% 25V
C508	1-162-970-11	s	CERAMIC, CHIP 0.01uF 10% 25V
C509	1-107-823-11	s	CERAMIC 0.47uF 10% 16V
C510	1-107-417-11	s	ELECT, CHIP 33uF 20% 25V
C511	1-107-417-11	s	ELECT, CHIP 33uF 20% 25V
C512	1-107-826-11	s	CERAMIC, CHIP 0.1uF 10% 16V
C513	1-107-823-11	s	CERAMIC 0.47uF 10% 16V
C514	1-109-892-11	s	ELECT, CHIP 47uF 20% 25V
C515	1-162-923-11	s	CERAMIC, CHIP 47PF 5% 50V
C516	1-162-966-11	s	CERAMIC, CHIP 0.0022uF 10% 50V
C517	1-164-315-11	s	CERAMIC, CHIP 470PF 5% 50V
C518	1-135-155-21	s	TANTALUM, CHIP 4.7uF 10% 16V
C519	1-107-826-11	s	CERAMIC, CHIP 0.1uF 10% 16V
C520	1-162-957-11	s	CERAMIC, CHIP 220PF 5% 50V
C521	1-164-227-11	s	CERAMIC, CHIP 0.022uF 10% 25V
C522	1-162-970-11	s	CERAMIC, CHIP 0.01uF 10% 25V
C523	1-162-970-11	s	CERAMIC, CHIP 0.01uF 10% 25V
C524	1-164-227-11	s	CERAMIC, CHIP 0.022uF 10% 25V
C526	1-107-823-11	s	CERAMIC 0.47uF 10% 16V
C528	1-107-823-11	s	CERAMIC 0.47uF 10% 16V
C529	1-109-892-11	s	ELECT, CHIP 47uF 20% 25V
C530	1-107-826-11	s	CERAMIC, CHIP 0.1uF 10% 16V
C532	1-164-227-11	s	CERAMIC, CHIP 0.022uF 10% 25V
CN5	1-778-532-11	o	CONNECTOR, BOARD TO BOARD 80P
CN501	1-695-320-21	o	PIN, CONNECTOR (1.5MM)(SMD) 2P
CN502	1-695-209-21	s	CONNECTOR, PC BOARD 15P, MALE
CN503	1-691-591-11	s	PIN, CONNECTOR (1.5MM)(SMD) 8P
CN504	1-766-383-11	o	PIN, CONNECTOR (1.5MM)(SMD) 12P
CN505	1-573-290-21	s	PIN, CONNECTOR (1.5MM)(SMD) 4P
CN507	1-766-382-11	o	PIN, CONNECTOR (1.5MM)(SMD) 10P
CN508	1-695-320-21	o	PIN, CONNECTOR (1.5MM)(SMD) 2P
CN509	1-695-320-21	o	PIN, CONNECTOR (1.5MM)(SMD) 2P
CN510	1-695-320-21	o	PIN, CONNECTOR (1.5MM)(SMD) 2P

(MDC-5 BOARD)

Ref. No. or Q'ty	Part No.	SP	Description
CN511	1-568-338-11	s	CONNECTOR, BOARD TO BOARD 24P
CN512	1-695-320-21	o	PIN, CONNECTOR (1.5MM)(SMD) 2P
CT300	1-424-511-11	s	TRANSFORMER, FE
D102	8-719-041-79	s	DIODE MA721WA-TX
D103-108	8-719-026-34	s	LED CL-170UR-CD, RED
D300	8-719-026-34	s	LED CL-170UR-CD, RED
D301	8-719-026-34	s	LED CL-170UR-CD, RED
D302	8-719-026-34	s	LED CL-170UR-CD, RED
D303	8-719-026-34	s	LED CL-170UR-CD, RED
D304	8-719-106-88	s	DIODE RD15M-B1
D305	8-719-026-34	s	LED CL-170UR-CD, RED
D306	8-719-941-86	s	DIODE DAN202U
D307	8-719-941-23	s	DIODE DA204U
D308	8-719-157-36	s	DIODE RD6.8M-B
D500	8-719-938-75	s	DIODE SB05-05CP
D501	8-719-938-75	s	DIODE SB05-05CP
D502	8-719-938-75	s	DIODE SB05-05CP
D503	8-719-938-75	s	DIODE SB05-05CP
IC100	8-759-066-61	s	IC TC4053BFS
IC101	8-759-338-95	s	IC NJM2903V(TE2)
IC102	8-759-111-56	s	IC UPC4572G2
IC103	8-759-805-32	s	IC LA7205M
IC104	8-759-051-48	s	IC SN74HCT541APW-E05
IC105	8-759-260-55	s	IC TLC272CPW-E05
IC106	8-759-338-95	s	IC NJM2903V(TE2)
IC107	8-759-273-87	s	IC NJM2901V(TE2)
IC108	8-759-079-63	s	IC TC74VHC86FS(EL)
IC109	8-759-079-61	s	IC TC74VHC74FS(EL)
IC112	Pending	s	IC CXP87600
IC114	8-759-337-40	s	IC NJM2904V(TE2)
IC116	Pending	s	IC CXP87600
IC117	8-759-166-93	s	IC LB1843V-TLM
IC118	8-759-431-99	s	IC BR9020F-E2
IC119	8-759-259-18	s	IC MB3793-42PNF
IC120	8-759-271-86	s	IC TC7SH04FU
IC121	8-759-271-86	s	IC TC7SH04FU
IC122	8-759-271-86	s	IC TC7SH04FU
IC124	8-759-196-93	s	IC TC7SH00FU-TE85R
IC125	8-759-196-96	s	IC TC7SH08FU-TE85R
IC126	8-759-710-88	s	IC NJM431U
IC300	8-759-399-64	s	IC LB1857M-TE-L
IC301	8-759-066-61	s	IC TC4053BFS
IC302	8-759-271-86	s	IC TC7SH04FU
IC303	8-759-710-28	s	IC NJM4565M-A
IC304	8-759-338-95	s	IC NJM2903V(TE2)
IC305	8-759-234-77	s	IC TC4S66F
IC500	8-759-371-43	s	IC SI9145BQ-T1
IC501	8-759-271-86	s	IC TC7SH04FU
IC502	8-759-189-47	s	IC MC34151DR2
IC503	8-729-025-54	s	TRANSISTOR SI9958DY
IC504	8-759-371-43	s	IC SI9145BQ-T1
IC505	8-759-271-86	s	IC TC7SH04FU
IC507	8-729-025-54	s	TRANSISTOR SI9958DY
IC510	8-759-196-96	s	IC TC7SH08FU-TE85R
IC511	8-759-338-95	s	IC NJM2903V(TE2)
IC512	8-759-710-88	s	IC NJM431U
L100	1-410-733-11	s	INDUCTOR, CHIP 0.22uH

(MDC-5 BOARD)

Ref. No. or Q'ty	Part No.	SP	Description
L101	1-410-733-11	s	INDUCTOR, CHIP 0.22uH
L105	1-409-647-11	s	COIL, CHOKE 22uH
L106	1-410-369-11	s	INDUCTOR CHIP 1UH
L107	1-410-369-11	s	INDUCTOR CHIP 1UH
L300	1-424-642-11	s	COIL, CHOKE 47uH
L500	1-409-722-11	s	COIL, CHOKE 220uH
L501	1-409-722-11	s	COIL, CHOKE 220uH
L502	1-424-642-11	s	COIL, CHOKE 47uH
PD300	8-719-988-15	s	PHTO REFLECTOR PR-11-C
PD301	8-719-988-15	s	PHTO REFLECTOR PR-11-C
PD302	8-719-988-15	s	PHTO REFLECTOR PR-11-C
PD303	8-719-988-15	s	PHTO REFLECTOR PR-11-C
PD304	8-719-939-23	s	PHOTO INTERRUPTER GP2S09-C
PD305	8-719-939-23	s	PHOTO INTERRUPTER GP2S09-C
PD306	8-749-010-00	s	PHOTO INTERRUPTER GP1S33
Q107	8-729-824-34	s	TRANSISTOR 2SJ187
Q108	8-729-808-42	s	TRANSISTOR 2SD1624-T
Q109	8-729-029-14	s	TRANSISTOR DTC144EUA-T106
Q110	8-729-029-14	s	TRANSISTOR DTC144EUA-T106
Q300	8-729-117-32	s	TRANSISTOR 2SC4177
Q301	8-729-117-32	s	TRANSISTOR 2SC4177
Q302	8-729-117-32	s	TRANSISTOR 2SC4177
Q303	8-729-117-32	s	TRANSISTOR 2SC4177
Q304	8-729-808-42	s	TRANSISTOR 2SD1624-T
Q305	8-729-118-56	s	TRANSISTOR 2SK852-X2
Q306	8-729-117-32	s	TRANSISTOR 2SC4177
Q307	8-729-117-32	s	TRANSISTOR 2SC4177
Q308	8-729-117-32	s	TRANSISTOR 2SC4177
Q309	8-729-028-91	s	TRANSISTOR DTA144EUA-T106
Q310	8-729-028-91	s	TRANSISTOR DTA144EUA-T106
Q311	8-729-024-50	s	TRANSISTOR SI9936DY
Q312	8-729-028-91	s	TRANSISTOR DTA144EUA-T106
Q313	8-729-029-14	s	TRANSISTOR DTC144EUA-T106
Q314	8-729-117-32	s	TRANSISTOR 2SC4177
Q315	8-729-140-63	s	TRANSISTOR 2SA1611-M5M6
Q316	8-729-824-34	s	TRANSISTOR 2SJ187
Q317	8-729-209-07	s	TRANSISTOR 2SC4213-B
Q318	8-729-209-07	s	TRANSISTOR 2SC4213-B
Q319	8-729-028-91	s	TRANSISTOR DTA144EUA-T106
Q320	8-729-028-91	s	TRANSISTOR DTA144EUA-T106
Q321	8-729-028-91	s	TRANSISTOR DTA144EUA-T106
Q322	8-729-117-32	s	TRANSISTOR 2SC4177
Q323	8-729-029-14	s	TRANSISTOR DTC144EUA-T106
Q324	8-729-145-14	s	TRANSISTOR 2SK1483
Q325	8-729-029-14	s	TRANSISTOR DTC144EUA-T106
Q326	8-729-029-14	s	TRANSISTOR DTC144EUA-T106
Q500	8-729-028-91	s	TRANSISTOR DTA144EUA-T106
Q501	8-729-028-91	s	TRANSISTOR DTA144EUA-T106
R100	1-218-712-11	s	METAL, CHIP 6.8K 0.50% 1/16W
R101	1-218-708-11	s	METAL, CHIP 4.7K 0.50% 1/16W
R102	1-218-690-11	s	METAL, CHIP 820 0.50% 1/16W
R103	1-218-732-11	s	METAL, CHIP 47K 0.50% 1/16W
R104	1-218-701-11	s	METAL, CHIP 2.4K 0.50% 1/16W
R105	1-218-724-11	s	METAL, CHIP 22K 0.50% 1/16W
R106-110	1-218-716-11	s	METAL, CHIP 10K 0.50% 1/16W
R111-115	1-218-748-11	s	METAL, CHIP 220K 0.50% 1/16W
R116	1-218-732-11	s	METAL, CHIP 47K 0.50% 1/16W
R117	1-218-732-11	s	METAL, CHIP 47K 0.50% 1/16W

(MDC-5 BOARD)

Ref. No. or Q'ty	Part No.	SP	Description
R118	1-218-748-11	s	METAL, CHIP 220K 0.50% 1/16W
R119	1-219-797-11	s	METAL, CHIP 0.33 1% 1/4W
R120	1-218-732-11	s	METAL, CHIP 47K 0.50% 1/16W
R121	1-218-748-11	s	METAL, CHIP 220K 0.50% 1/16W
R122	1-218-724-11	s	METAL, CHIP 22K 0.50% 1/16W
R123	1-218-716-11	s	METAL, CHIP 10K 0.50% 1/16W
R124	1-218-748-11	s	METAL, CHIP 220K 0.50% 1/16W
R125	1-218-724-11	s	METAL, CHIP 22K 0.50% 1/16W
R126	1-218-746-11	s	METAL, CHIP 180K 0.50% 1/16W
R127	1-218-732-11	s	METAL, CHIP 47K 0.50% 1/16W
R128	1-218-730-11	s	METAL, CHIP 39K 0.50% 1/16W
R129	1-218-724-11	s	METAL, CHIP 22K 0.50% 1/16W
R131	1-218-732-11	s	METAL, CHIP 47K 0.50% 1/16W
R132	1-218-732-11	s	METAL, CHIP 47K 0.50% 1/16W
R133	1-218-716-11	s	METAL, CHIP 10K 0.50% 1/16W
R134	1-216-857-11	s	METAL, CHIP 1M 5% 1/16W
R135	1-218-730-11	s	METAL, CHIP 39K 0.50% 1/16W
R136	1-218-752-11	s	METAL, CHIP 330K 0.50% 1/16W
R137	1-218-732-11	s	METAL, CHIP 47K 0.50% 1/16W
R138	1-218-716-11	s	METAL, CHIP 10K 0.50% 1/16W
R139	1-218-716-11	s	METAL, CHIP 10K 0.50% 1/16W
R140	1-218-700-11	s	METAL, CHIP 2.2K 0.50% 1/16W
R141-146	1-218-716-11	s	METAL, CHIP 10K 0.50% 1/16W
R147	1-218-746-11	s	METAL, CHIP 180K 0.50% 1/16W
R148	1-218-748-11	s	METAL, CHIP 220K 0.50% 1/16W
R149	1-218-724-11	s	METAL, CHIP 22K 0.50% 1/16W
R150	1-218-748-11	s	METAL, CHIP 220K 0.50% 1/16W
R151	1-218-752-11	s	METAL, CHIP 330K 0.50% 1/16W
R152	1-216-857-11	s	METAL, CHIP 1M 5% 1/16W
R153	1-218-716-11	s	METAL, CHIP 10K 0.50% 1/16W
R154	1-218-700-11	s	METAL, CHIP 2.2K 0.50% 1/16W
R155	1-218-716-11	s	METAL, CHIP 10K 0.50% 1/16W
R156	1-218-716-11	s	METAL, CHIP 10K 0.50% 1/16W
R157	1-218-732-11	s	METAL, CHIP 47K 0.50% 1/16W
R158	1-218-740-11	s	METAL, CHIP 100K 0.50% 1/16W
R159	1-218-740-11	s	METAL, CHIP 100K 0.50% 1/16W
R160	1-218-732-11	s	METAL, CHIP 47K 0.50% 1/16W
R161	1-218-716-11	s	METAL, CHIP 10K 0.50% 1/16W
R162	1-218-716-11	s	METAL, CHIP 10K 0.50% 1/16W
R163	1-218-732-11	s	METAL, CHIP 47K 0.50% 1/16W
R164	1-218-732-11	s	METAL, CHIP 47K 0.50% 1/16W
R165	1-218-732-11	s	METAL, CHIP 47K 0.50% 1/16W
R166	1-218-732-11	s	METAL, CHIP 47K 0.50% 1/16W
R167	1-218-724-11	s	METAL, CHIP 22K 0.50% 1/16W
R168	1-218-744-11	s	METAL, CHIP 150K 0.50% 1/16W
R169	1-218-732-11	s	METAL, CHIP 47K 0.50% 1/16W
R170	1-218-723-11	s	METAL, CHIP 20K 0.50% 1/16W
R182	1-218-732-11	s	METAL, CHIP 47K 0.50% 1/16W
R183	1-218-732-11	s	METAL, CHIP 47K 0.50% 1/16W
R190	1-218-744-11	s	METAL, CHIP 150K 0.50% 1/16W
R191	1-218-732-11	s	METAL, CHIP 47K 0.50% 1/16W
R196	1-218-716-11	s	METAL, CHIP 10K 0.50% 1/16W
R209	1-218-724-11	s	METAL, CHIP 22K 0.50% 1/16W
R211	1-218-748-11	s	METAL, CHIP 220K 0.50% 1/16W
R214	1-218-744-11	s	METAL, CHIP 150K 0.50% 1/16W
R215	1-218-732-11	s	METAL, CHIP 47K 0.50% 1/16W
R219	1-218-740-11	s	METAL, CHIP 100K 0.50% 1/16W
R220	1-218-716-11	s	METAL, CHIP 10K 0.50% 1/16W
R221	1-218-744-11	s	METAL, CHIP 150K 0.50% 1/16W

(MDC-5 BOARD)

Ref. No. or Q'ty	Part No.	SP	Description
R222	1-218-744-11	s	METAL, CHIP 150K 0.50% 1/16W
R223	1-218-744-11	s	METAL, CHIP 150K 0.50% 1/16W
R224	1-218-744-11	s	METAL, CHIP 150K 0.50% 1/16W
R225	1-218-740-11	s	METAL, CHIP 100K 0.50% 1/16W
R226	1-218-676-11	s	METAL, CHIP 220 0.50% 1/16W
R227	1-218-692-11	s	METAL, CHIP 1K 0.50% 1/16W
R230	1-218-740-11	s	METAL, CHIP 100K 0.50% 1/16W
R231	1-218-740-11	s	METAL, CHIP 100K 0.50% 1/16W
R232	1-218-708-11	s	METAL, CHIP 4.7K 0.50% 1/16W
R233	1-218-716-11	s	METAL, CHIP 10K 0.50% 1/16W
R234	1-218-740-11	s	METAL, CHIP 100K 0.50% 1/16W
R235	1-218-740-11	s	METAL, CHIP 100K 0.50% 1/16W
R236	1-218-692-11	s	METAL, CHIP 1K 0.50% 1/16W
R237	1-218-660-11	s	METAL, CHIP 47 0.50% 1/16W
R238	1-218-748-11	s	METAL, CHIP 220K 0.50% 1/16W
R239	1-218-748-11	s	METAL, CHIP 220K 0.50% 1/16W
R240	1-218-748-11	s	METAL, CHIP 220K 0.50% 1/16W
R241	1-218-708-11	s	METAL, CHIP 4.7K 0.50% 1/16W
R242	1-218-708-11	s	METAL, CHIP 4.7K 0.50% 1/16W
R246	1-218-740-11	s	METAL, CHIP 100K 0.50% 1/16W
R247	1-218-692-11	s	METAL, CHIP 1K 0.50% 1/16W
R248	1-218-716-11	s	METAL, CHIP 10K 0.50% 1/16W
R249	1-218-726-11	s	METAL, CHIP 27K 0.50% 1/16W
R300	1-218-688-11	s	METAL, CHIP 680 0.50% 1/16W
R301	1-218-688-11	s	METAL, CHIP 680 0.50% 1/16W
R302	1-218-748-11	s	METAL, CHIP 220K 0.50% 1/16W
R303	1-218-748-11	s	METAL, CHIP 220K 0.50% 1/16W
R304	1-218-708-11	s	METAL, CHIP 4.7K 0.50% 1/16W
R305	1-218-692-11	s	METAL, CHIP 1K 0.50% 1/16W
R306	1-218-728-11	s	METAL, CHIP 33K 0.50% 1/16W
R307	1-218-684-11	s	METAL, CHIP 470 0.50% 1/16W
R308	1-218-752-11	s	METAL, CHIP 330K 0.50% 1/16W
R309	1-218-750-11	s	METAL, CHIP 270K 0.50% 1/16W
R310	1-218-750-11	s	METAL, CHIP 270K 0.50% 1/16W
R311	1-218-674-11	s	METAL, CHIP 180 0.50% 1/16W
R312	1-218-656-11	s	METAL, CHIP 33 0.50% 1/16W
R313	1-218-740-11	s	METAL, CHIP 100K 0.50% 1/16W
R314	1-218-740-11	s	METAL, CHIP 100K 0.50% 1/16W
R315	1-218-740-11	s	METAL, CHIP 100K 0.50% 1/16W
R316	1-218-708-11	s	METAL, CHIP 4.7K 0.50% 1/16W
R317	1-216-853-11	s	METAL, CHIP 470K 5% 1/16W
R318	1-218-708-11	s	METAL, CHIP 4.7K 0.50% 1/16W
R319	1-218-744-11	s	METAL, CHIP 150K 0.50% 1/16W
R320	1-216-852-11	s	METAL, CHIP 390K 5% 1/16W
R321	1-218-724-11	s	METAL, CHIP 22K 0.50% 1/16W
R322	1-218-712-11	s	METAL, CHIP 6.8K 0.50% 1/16W
R323	1-218-680-11	s	METAL, CHIP 330 0.50% 1/16W
R324	1-216-853-11	s	METAL, CHIP 470K 5% 1/16W
R325	1-218-684-11	s	METAL, CHIP 470 0.50% 1/16W
R326	1-218-698-11	s	METAL, CHIP 1.8K 0.50% 1/16W
R327	1-218-732-11	s	METAL, CHIP 47K 0.50% 1/16W
R328	1-218-692-11	s	METAL, CHIP 1K 0.50% 1/16W
R329	1-218-704-11	s	METAL, CHIP 3.3K 0.50% 1/16W
R330	1-218-732-11	s	METAL, CHIP 47K 0.50% 1/16W
R331	1-218-732-11	s	METAL, CHIP 47K 0.50% 1/16W
R332	1-218-644-11	s	METAL, CHIP 10 0.50% 1/16W
R333	1-218-696-11	s	METAL, CHIP 1.5K 0.50% 1/16W
R334	1-218-680-11	s	METAL, CHIP 330 0.50% 1/16W
R335	1-216-789-11	s	METAL, CHIP 2.2 5% 1/16W

(MDC-5 BOARD)

Ref. No. or Q'ty	Part No.	SP	Description
R336	1-216-789-11	s	METAL, CHIP 2.2 5% 1/16W
R337	1-218-744-11	s	METAL, CHIP 150K 0.50% 1/16W
R338	1-218-750-11	s	METAL, CHIP 270K 0.50% 1/16W
R339	1-218-716-11	s	METAL, CHIP 10K 0.50% 1/16W
R340	1-218-746-11	s	METAL, CHIP 180K 0.50% 1/16W
R341	1-218-724-11	s	METAL, CHIP 22K 0.50% 1/16W
R342	1-216-857-11	s	METAL, CHIP 1M 5% 1/16W
R343	1-216-789-11	s	METAL, CHIP 2.2 5% 1/16W
R344	1-218-708-11	s	METAL, CHIP 4.7K 0.50% 1/16W
R345	1-216-789-11	s	METAL, CHIP 2.2 5% 1/16W
R346	1-218-708-11	s	METAL, CHIP 4.7K 0.50% 1/16W
R347	1-218-752-11	s	METAL, CHIP 330K 0.50% 1/16W
R348	1-218-740-11	s	METAL, CHIP 100K 0.50% 1/16W
R349	1-216-793-11	s	METAL, CHIP 4.7 5% 1/16W
R350	1-216-793-11	s	METAL, CHIP 4.7 5% 1/16W
R351	1-216-793-11	s	METAL, CHIP 4.7 5% 1/16W
R352	1-218-716-11	s	METAL, CHIP 10K 0.50% 1/16W
R353	1-218-684-11	s	METAL, CHIP 470 0.50% 1/16W
R354	1-218-740-11	s	METAL, CHIP 100K 0.50% 1/16W
R500	1-218-732-11	s	METAL, CHIP 47K 0.50% 1/16W
R501	1-218-728-11	s	METAL, CHIP 33K 0.50% 1/16W
R502	1-218-668-11	s	METAL, CHIP 100 0.50% 1/16W
R503	1-218-748-11	s	METAL, CHIP 220K 0.50% 1/16W
R504	1-218-744-11	s	METAL, CHIP 150K 0.50% 1/16W
R506	1-218-716-11	s	METAL, CHIP 10K 0.50% 1/16W
R507	1-218-716-11	s	METAL, CHIP 10K 0.50% 1/16W
R508	1-218-660-11	s	METAL, CHIP 47 0.50% 1/16W
R509	1-218-716-11	s	METAL, CHIP 10K 0.50% 1/16W
R510	1-218-716-11	s	METAL, CHIP 10K 0.50% 1/16W
R511	1-218-660-11	s	METAL, CHIP 47 0.50% 1/16W
R512	1-218-660-11	s	METAL, CHIP 47 0.50% 1/16W
R513	1-218-732-11	s	METAL, CHIP 47K 0.50% 1/16W
R514	1-218-728-11	s	METAL, CHIP 33K 0.50% 1/16W
R515	1-218-668-11	s	METAL, CHIP 100 0.50% 1/16W
R516	1-218-748-11	s	METAL, CHIP 220K 0.50% 1/16W
R517	1-218-744-11	s	METAL, CHIP 150K 0.50% 1/16W
R518	1-218-732-11	s	METAL, CHIP 47K 0.50% 1/16W
R519	1-218-716-11	s	METAL, CHIP 10K 0.50% 1/16W
R520	1-218-716-11	s	METAL, CHIP 10K 0.50% 1/16W
R521	1-218-660-11	s	METAL, CHIP 47 0.50% 1/16W
R522	1-218-716-11	s	METAL, CHIP 10K 0.50% 1/16W
R523	1-218-716-11	s	METAL, CHIP 10K 0.50% 1/16W
R524	1-218-660-11	s	METAL, CHIP 47 0.50% 1/16W
R525	1-218-660-11	s	METAL, CHIP 47 0.50% 1/16W
R526	1-218-743-11	s	METAL, CHIP 130K 0.50% 1/16W
R527	1-218-726-11	s	METAL, CHIP 27K 0.50% 1/16W
R528	1-216-864-11	s	METAL, CHIP 0 5% 1/16W
R529	1-218-722-11	s	METAL, CHIP 18K 0.50% 1/16W
R530	1-218-740-11	s	METAL, CHIP 100K 0.50% 1/16W
R531	1-218-716-11	s	METAL, CHIP 10K 0.50% 1/16W
R532	1-218-716-11	s	METAL, CHIP 10K 0.50% 1/16W
R533	1-218-716-11	s	METAL, CHIP 10K 0.50% 1/16W
R534	1-218-716-11	s	METAL, CHIP 10K 0.50% 1/16W
R535	1-216-864-11	s	METAL, CHIP 0 5% 1/16W
R536	1-218-738-11	s	METAL, CHIP 82K 0.5% 1/16W
R537	1-218-732-11	s	METAL, CHIP 47K 0.50% 1/16W
R538	1-218-712-11	s	METAL, CHIP 6.8K 0.50% 1/16W
R539	1-218-722-11	s	METAL, CHIP 18K 0.50% 1/16W
R540	1-216-857-11	s	METAL, CHIP 1M 5% 1/16W

(MDC-5 BOARD)

Ref. No. or Q'ty	Part No.	SP	Description
R541	1-216-857-11	s	METAL, CHIP 1M 5% 1/16W
R542	1-218-716-11	s	METAL, CHIP 10K 0.50% 1/16W
R543	1-218-716-11	s	METAL, CHIP 10K 0.50% 1/16W
R544	1-218-692-11	s	METAL, CHIP 1K 0.50% 1/16W
R545	1-216-864-11	s	METAL, CHIP 0 5% 1/16W
R546	1-216-864-11	s	METAL, CHIP 0 5% 1/16W
RB100	1-239-444-11	s	NETWORK RESISTOR (CHIP) 220K
RB101	1-239-444-11	s	NETWORK RESISTOR (CHIP) 220K
RB102	1-239-389-11	s	NWTWORK RESISTOR (CHIP) 47K
RB103	1-239-389-11	s	NWTWORK RESISTOR (CHIP) 47K
RB104	1-236-904-11	s	NETWORK RESISTOR (CHIP) 1.0K
RB105	1-236-904-11	s	NETWORK RESISTOR (CHIP) 1.0K
RB106	1-236-904-11	s	NETWORK RESISTOR (CHIP) 1.0K
RB107	1-239-444-11	s	NETWORK RESISTOR (CHIP) 220K
RB108-113	1-236-904-11	s	NETWORK RESISTOR (CHIP) 1.0K
RB114	1-239-444-11	s	NETWORK RESISTOR (CHIP) 220K
RB115	1-239-430-11	s	NETWORK RESISTOR (CHIP) 4.7K
RB116	1-239-444-11	s	NETWORK RESISTOR (CHIP) 220K
RB300	1-236-907-11	s	NETWORK RESISTOR (CHIP) 100K
RB301	1-239-444-11	s	NETWORK RESISTOR (CHIP) 220K
RB302	1-239-430-11	s	NETWORK RESISTOR (CHIP) 4.7K
RB303	1-236-904-11	s	NETWORK RESISTOR (CHIP) 1.0K
RV100	1-237-039-11	s	RES, ADJ METAL 100K
S100-107	1-572-719-11	s	SWITCH, PUSH
S108	1-571-938-11	s	SWITCH, PUSH
S109	1-571-938-11	s	SWITCH, PUSH
S110	1-692-881-41	s	SWITCH, SLIDE
S111	1-692-881-41	s	SWITCH, SLIDE
S300	1-571-938-11	s	SWITCH, PUSH
X100	1-760-271-11	s	CRYSTAL 12.000000MHz
X101	1-760-271-11	s	CRYSTAL 12.000000MHz

http://getMANUAL.com

MDR-1 BOARD

Ref. No. or Q'ty	Part No.	SP	Description
1pc	1-662-314-11	o	PRINTED CIRCUIT BOARD, MDR-1
C1-6	1-107-826-11	s	CERAMIC, CHIP 0.1uF 10% 16V
C7	1-107-689-21	s	TANTALUM, CHIP 1uF 20% 35V
C8	1-164-695-11	s	CERAMIC 0.0022uF 5% 50V
C9	1-107-826-11	s	CERAMIC, CHIP 0.1uF 10% 16V
C10	1-135-177-21	s	TANTALUM, CHIP 1uF 10% 25V
C11	1-135-177-21	s	TANTALUM, CHIP 1uF 10% 25V
CN1	1-562-772-11	o	CONNECTOR, 12P, FEMALE
CN2	1-562-772-11	o	CONNECTOR, 12P, FEMALE
CN3	1-691-551-11	s	PIN, CONNECTOR (1.5MM)(SMD) 8P
CN4	1-764-007-11	s	PIN, CONNECTOR (1.5MM)(SMD) 12P
IC2	8-759-399-64	s	IC LB1857M-TE-L
R1	1-218-674-11	s	METAL, CHIP 180 0.50% 1/16W
R2	1-218-670-11	s	METAL, CHIP 120 0.50% 1/16W
R3	1-218-776-11	s	METAL 1M 0.5% 1/10W
R4	1-218-730-11	s	METAL, CHIP 39K 0.50% 1/16W
R5	1-216-793-11	s	METAL, CHIP 4.7 5% 1/16W
R6	1-216-793-11	s	METAL, CHIP 4.7 5% 1/16W
R7	1-216-793-11	s	METAL, CHIP 4.7 5% 1/16W

PA-186 BOARD *For DNW-7/7P/90/90P/90WS/90WSP only

Ref. No. or Q'ty	Part No.	SP	Description
C1	1-113-981-11	s	TANTALUM, CHIP 22uF 20% 20V
C2	1-164-156-11	s	CERAMIC, CHIP 0.1uF 25V
C3	1-113-981-11	s	TANTALUM, CHIP 22uF 20% 20V
C4	1-113-981-11	s	TANTALUM, CHIP 22uF 20% 20V
C5	1-107-686-11	s	TANTALUM, CHIP 4.7uF 20% 16V
C6	1-162-970-11	s	CERAMIC, CHIP 0.01uF 10% 25V
C7	1-162-964-11	s	CERAMIC, CHIP 0.001uF 10% 50V
C8	1-104-823-11	s	TANTALUM, CHIP 47uF 20% 16V
C9	1-107-686-11	s	TANTALUM, CHIP 4.7uF 20% 16V
C10	1-162-964-11	s	CERAMIC, CHIP 0.001uF 10% 50V
C11	1-162-970-11	s	CERAMIC, CHIP 0.01uF 10% 25V
C14	1-164-156-11	s	CERAMIC, CHIP 0.1uF 25V
C15	1-104-823-11	s	TANTALUM, CHIP 47uF 20% 16V
C16	1-113-981-11	s	TANTALUM, CHIP 22uF 20% 20V
C17	1-164-156-11	s	CERAMIC, CHIP 0.1uF 25V
C18	1-113-981-11	s	TANTALUM, CHIP 22uF 20% 20V
C19	1-113-981-11	s	TANTALUM, CHIP 22uF 20% 20V
C20	1-107-686-11	s	TANTALUM, CHIP 4.7uF 20% 16V
C21	1-162-970-11	s	CERAMIC, CHIP 0.01uF 10% 25V
C22	1-162-964-11	s	CERAMIC, CHIP 0.001uF 10% 50V
C23	1-162-964-11	s	CERAMIC, CHIP 0.001uF 10% 50V
C26	1-164-156-11	s	CERAMIC, CHIP 0.1uF 25V
C27	1-113-981-11	s	TANTALUM, CHIP 22uF 20% 20V
C28	1-164-156-11	s	CERAMIC, CHIP 0.1uF 25V
C29	1-113-981-11	s	TANTALUM, CHIP 22uF 20% 20V
C30	1-113-981-11	s	TANTALUM, CHIP 22uF 20% 20V
C31	1-107-686-11	s	TANTALUM, CHIP 4.7uF 20% 16V
C32	1-162-970-11	s	CERAMIC, CHIP 0.01uF 10% 25V
C33	1-113-981-11	s	TANTALUM, CHIP 22uF 20% 20V
C34	1-113-981-11	s	TANTALUM, CHIP 22uF 20% 20V
C35	1-162-964-11	s	CERAMIC, CHIP 0.001uF 10% 50V
C36	1-162-964-11	s	CERAMIC, CHIP 0.001uF 10% 50V
C39	1-164-156-11	s	CERAMIC, CHIP 0.1uF 25V
C40	1-164-156-11	s	CERAMIC, CHIP 0.1uF 25V
C42	1-164-156-11	s	CERAMIC, CHIP 0.1uF 25V
C44	1-164-156-11	s	CERAMIC, CHIP 0.1uF 25V
C46	1-162-964-11	s	CERAMIC, CHIP 0.001uF 10% 50V
C47	1-164-156-11	s	CERAMIC, CHIP 0.1uF 25V
C48	1-164-156-11	s	CERAMIC, CHIP 0.1uF 25V
C50	1-162-915-11	s	CERAMIC, CHIP 10PF 50V
C51	1-113-682-11	s	TANTALUM, CHIP 33uF 20% 10V
C52	1-113-682-11	s	TANTALUM, CHIP 33uF 20% 10V
C53	1-113-682-11	s	TANTALUM, CHIP 33uF 20% 10V
C54	1-162-970-11	s	CERAMIC, CHIP 0.01uF 10% 25V
C55	1-107-686-11	s	TANTALUM, CHIP 4.7uF 20% 16V
C56	1-104-823-11	s	TANTALUM, CHIP 47uF 20% 16V
C57	1-113-981-11	s	TANTALUM, CHIP 22uF 20% 20V
CN1	1-506-467-11	o	CONNECTOR 2P, MALE
CN2	1-506-467-11	o	CONNECTOR 2P, MALE
CN3	1-506-467-11	o	CONNECTOR 2P, MALE
CN4	1-568-331-11	s	CONNECTOR, BOARD TO BOARD 10P
CN5	1-691-942-11	s	CONNECTOR, BOARD TO BOARD 30P
CN7	1-691-942-11	s	CONNECTOR, BOARD TO BOARD 30P
D1	8-719-041-68	s	DIODE RD3.3UH(1)-T1
D2	8-719-029-57	s	DIODE RD2.4UH-T1

(PA-186 BOARD)

Ref. No. or Q'ty	Part No.	SP	Description
D3	8-719-041-68	s	DIODE RD3.3UH(1)-T1
D4	8-719-041-68	s	DIODE RD3.3UH(1)-T1
D5	8-719-029-57	s	DIODE RD2.4UH-T1
IC1	8-752-052-72	s	IC CXA1439M
IC2	8-759-082-53	s	IC TLC274CPW
IC3	8-759-196-96	s	IC TC7SH08FU-TE85R
IC4	8-759-196-96	s	IC TC7SH08FU-TE85R
IC5	8-759-337-40	s	IC NJM2904V(TE2)
IC6	8-759-196-96	s	IC TC7SH08FU-TE85R
IC7	8-759-447-77	s	IC TC7WH74FU(TR12R)
IC8	8-752-052-72	s	IC CXA1439M
IC9	8-759-196-96	s	IC TC7SH08FU-TE85R
IC10	8-759-196-96	s	IC TC7SH08FU-TE85R
IC11	8-759-196-96	s	IC TC7SH08FU-TE85R
IC12	8-759-447-77	s	IC TC7WH74FU(TR12R)
IC13	8-752-052-72	s	IC CXA1439M
IC14	8-759-196-96	s	IC TC7SH08FU-TE85R
IC15	8-759-196-96	s	IC TC7SH08FU-TE85R
IC16	8-759-196-96	s	IC TC7SH08FU-TE85R
IC17	8-759-447-77	s	IC TC7WH74FU(TR12R)
IC18	8-759-196-93	s	IC TC7SH00FU-TE85R
IC19	8-759-196-93	s	IC TC7SH00FU-TE85R
IC20	8-759-066-68	s	IC REF-03GS
IC21	8-759-196-93	s	IC TC7SH00FU-TE85R
IC22	8-759-196-96	s	IC TC7SH08FU-TE85R
IC23	8-759-196-96	s	IC TC7SH08FU-TE85R
IC24	8-759-337-40	s	IC NJM2904V(TE2)
L1-5	1-410-737-31	s	INDUCTOR, CHIP 0.47uH
Q3	8-729-122-63	s	TRANSISTOR 2SA1226
Q4	8-729-216-22	s	TRANSISTOR 2SA1162
Q5	8-729-216-22	s	TRANSISTOR 2SA1162
Q8	8-729-122-63	s	TRANSISTOR 2SA1226
Q9	8-729-216-22	s	TRANSISTOR 2SA1162
Q12	8-729-122-63	s	TRANSISTOR 2SA1226
Q13	8-729-216-22	s	TRANSISTOR 2SA1162
Q14	8-729-216-22	s	TRANSISTOR 2SA1162
R1	1-218-684-11	s	METAL, CHIP 470 0.50% 1/16W
R4	1-218-656-11	s	METAL, CHIP 33 0.50% 1/16W
R5	1-218-716-11	s	METAL, CHIP 10K 0.50% 1/16W
R6	1-218-700-11	s	METAL, CHIP 2.2K 0.50% 1/16W
R7	1-218-708-11	s	METAL, CHIP 4.7K 0.50% 1/16W
R9	1-218-668-11	s	METAL, CHIP 100 0.50% 1/16W
R10	1-216-864-11	s	METAL, CHIP 0 5% 1/16W
R11	1-216-864-11	s	METAL, CHIP 0 5% 1/16W
R13	1-218-724-11	s	METAL, CHIP 22K 0.50% 1/16W
R14	1-218-719-11	s	METAL, CHIP 13K 0.50% 1/16W
R15	1-218-716-11	s	METAL, CHIP 10K 0.50% 1/16W
R16	1-218-703-11	s	METAL, CHIP 3K 0.50% 1/16W
R17	1-218-716-11	s	METAL, CHIP 10K 0.50% 1/16W
R18	1-216-789-11	s	METAL, CHIP 2.2 5% 1/16W
R19	1-218-740-11	s	METAL, CHIP 100K 0.50% 1/16W
R20	1-218-644-11	s	METAL, CHIP 10 0.50% 1/16W
R21	1-218-692-11	s	METAL, CHIP 1K 0.50% 1/16W
R22	1-218-644-11	s	METAL, CHIP 10 0.50% 1/16W
R23	1-218-684-11	s	METAL, CHIP 470 0.50% 1/16W
R26	1-218-656-11	s	METAL, CHIP 33 0.50% 1/16W
R27	1-218-716-11	s	METAL, CHIP 10K 0.50% 1/16W

(PA-186 BOARD)

Ref. No. or Q'ty	Part No.	SP	Description
R28	1-218-700-11	s	METAL, CHIP 2.2K 0.50% 1/16W
R29	1-218-708-11	s	METAL, CHIP 4.7K 0.50% 1/16W
R31	1-218-668-11	s	METAL, CHIP 100 0.50% 1/16W
R32	1-216-864-11	s	METAL, CHIP 0 5% 1/16W
R33	1-216-864-11	s	METAL, CHIP 0 5% 1/16W
R35	1-218-724-11	s	METAL, CHIP 22K 0.50% 1/16W
R36	1-218-719-11	s	METAL, CHIP 13K 0.50% 1/16W
R37	1-218-740-11	s	METAL, CHIP 100K 0.50% 1/16W
R38	1-218-644-11	s	METAL, CHIP 10 0.50% 1/16W
R39	1-218-644-11	s	METAL, CHIP 10 0.50% 1/16W
R40	1-218-684-11	s	METAL, CHIP 470 0.50% 1/16W
R43	1-218-656-11	s	METAL, CHIP 33 0.50% 1/16W
R44	1-218-716-11	s	METAL, CHIP 10K 0.50% 1/16W
R45	1-218-700-11	s	METAL, CHIP 2.2K 0.50% 1/16W
R46	1-218-708-11	s	METAL, CHIP 4.7K 0.50% 1/16W
R48	1-216-864-11	s	METAL, CHIP 0 5% 1/16W
R49	1-216-864-11	s	METAL, CHIP 0 5% 1/16W
R50	1-218-668-11	s	METAL, CHIP 100 0.50% 1/16W
R52	1-218-724-11	s	METAL, CHIP 22K 0.50% 1/16W
R53	1-218-719-11	s	METAL, CHIP 13K 0.50% 1/16W
R54	1-218-740-11	s	METAL, CHIP 100K 0.50% 1/16W
R55	1-218-644-11	s	METAL, CHIP 10 0.50% 1/16W
R56	1-218-644-11	s	METAL, CHIP 10 0.50% 1/16W
R57	1-218-644-11	s	METAL, CHIP 10 0.50% 1/16W
R58-63	1-218-660-11	s	METAL, CHIP 47 0.50% 1/16W
R64	1-218-692-11	s	METAL, CHIP 1K 0.50% 1/16W
R65	1-218-668-11	s	METAL, CHIP 100 0.50% 1/16W
R68	1-218-668-11	s	METAL, CHIP 100 0.50% 1/16W
R70	1-218-740-11	s	METAL, CHIP 100K 0.50% 1/16W
R71	1-218-668-11	s	METAL, CHIP 100 0.50% 1/16W
R75	1-216-864-11	s	METAL, CHIP 0 5% 1/16W
R80	1-216-864-11	s	METAL, CHIP 0 5% 1/16W
R85	1-216-864-11	s	METAL, CHIP 0 5% 1/16W
R87	1-218-716-11	s	METAL, CHIP 10K 0.50% 1/16W
R88	1-218-716-11	s	METAL, CHIP 10K 0.50% 1/16W
R89	1-218-692-11	s	METAL, CHIP 1K 0.50% 1/16W
R91	1-218-644-11	s	METAL, CHIP 10 0.50% 1/16W
R93	1-218-692-11	s	METAL, CHIP 1K 0.50% 1/16W
R94	1-218-692-11	s	METAL, CHIP 1K 0.50% 1/16W
R95	1-216-864-11	s	METAL, CHIP 0 5% 1/16W
R96	1-216-864-11	s	METAL, CHIP 0 5% 1/16W
R97	1-218-644-11	s	METAL, CHIP 10 0.50% 1/16W
R99	1-218-644-11	s	METAL, CHIP 10 0.50% 1/16W
R100	1-218-644-11	s	METAL, CHIP 10 0.50% 1/16W
R101	1-218-708-11	s	METAL, CHIP 4.7K 0.50% 1/16W
RV1	1-237-035-11	s	RES, ADJ METAL 5K
RV2	1-237-032-11	s	RES, ADJ METAL 500
RV3	1-237-035-11	s	RES, ADJ METAL 5K
RV4	1-237-032-11	s	RES, ADJ METAL 500
RV5	1-237-035-11	s	RES, ADJ METAL 5K
RV6	1-237-032-11	s	RES, ADJ METAL 500

PA-203 BOARD *For DNV-5 only

Ref. No. or Q'ty	Part No.	SP	Description
1pc	A-8311-257-A	o	MOUNTED CIRCUIT BOARD, PA-203
C100	1-128-405-11	s	ELECT 22uF 20% 50V
C101	1-128-405-11	s	ELECT 22uF 20% 50V
C102	1-164-227-11	s	CERAMIC, CHIP 0.022uF 10% 25V
C103	1-162-927-11	s	CERAMIC, CHIP 100PF 5% 50V
C104	1-164-227-11	s	CERAMIC, CHIP 0.022uF 10% 25V
C105	1-162-927-11	s	CERAMIC, CHIP 100PF 5% 50V
C106	1-104-823-11	s	TANTALUM, CHIP 47uF 20% 16V
C107	1-104-823-11	s	TANTALUM, CHIP 47uF 20% 16V
C108	1-104-913-11	s	TANTALUM, CHIP 10uF 20% 16V
C109	1-135-177-21	s	TANTALUM, CHIP 1uF 10% 25V
C110	1-107-826-11	s	CERAMIC, CHIP 0.1uF 10% 16V
C111	1-107-826-11	s	CERAMIC, CHIP 0.1uF 10% 16V
C112	1-135-215-21	s	TANTALUM, CHIP 6.8uF 10% 16V
C113	1-164-232-11	s	CERAMIC, CHIP 0.01uF 10% 100V
C114	1-135-215-21	s	TANTALUM, CHIP 6.8uF 10% 16V
C115	1-107-826-11	s	CERAMIC, CHIP 0.1uF 10% 16V
C116	1-107-826-11	s	CERAMIC, CHIP 0.1uF 10% 16V
CN1	1-580-789-21	s	PIN, CONNECTOR (1.5MM)(SMD) 6P
CN125	1-569-775-21	s	PIN, CONNECTOR (1.5MM)(SMD) 5P
CN133	1-580-055-21	s	PIN, CONNECTOR (1.5MM)(SMD) 2P
D100	8-719-800-76	s	DIODE 1SS226
D101	8-719-800-76	s	DIODE 1SS226
D102	8-719-029-63	s	DIODE RD4.3UH-T1
D103	8-719-029-63	s	DIODE RD4.3UH-T1
IC100	8-759-700-84	s	IC NJM2041M-D
IC101	8-759-701-01	s	IC NJM2904M
IC102	8-759-710-88	s	IC NJM431U
L100	1-410-737-31	s	INDUCTOR, CHIP 0.47uH
L101	1-410-737-31	s	INDUCTOR, CHIP 0.47uH
Q100	8-729-020-94	s	TRANSISTOR 2SA1314C-TE12L
Q101	8-729-808-42	s	TRANSISTOR 2SD1624-T
Q102	8-729-120-28	s	TRANSISTOR 2SC1623-L5L6
R100	1-218-704-11	s	METAL, CHIP 3.3K 0.50% 1/16W
R101	1-218-740-11	s	METAL, CHIP 100K 0.50% 1/16W
R102	1-218-740-11	s	METAL, CHIP 100K 0.50% 1/16W
R103	1-218-678-11	s	METAL, CHIP 270 0.50% 1/16W
R104	1-218-692-11	s	METAL, CHIP 1K 0.50% 1/16W
R105	1-218-704-11	s	METAL, CHIP 3.3K 0.50% 1/16W
R106	1-218-704-11	s	METAL, CHIP 3.3K 0.50% 1/16W
R107	1-218-732-11	s	METAL, CHIP 47K 0.50% 1/16W
R108	1-218-732-11	s	METAL, CHIP 47K 0.50% 1/16W
R109	1-218-724-11	s	METAL, CHIP 22K 0.50% 1/16W
R110	1-218-702-11	s	METAL, CHIP 2.7K 0.50% 1/16W
R111	1-218-724-11	s	METAL, CHIP 22K 0.50% 1/16W
R112	1-218-740-11	s	METAL, CHIP 100K 0.50% 1/16W
R113	1-218-732-11	s	METAL, CHIP 47K 0.50% 1/16W
R114	1-218-688-11	s	METAL, CHIP 680 0.50% 1/16W
R115	1-218-724-11	s	METAL, CHIP 22K 0.50% 1/16W
R116	1-218-740-11	s	METAL, CHIP 100K 0.50% 1/16W

PS-390 BOARD

Ref. No. or Q'ty	Part No.	SP	Description
1pc	A-8277-532-A	o	MOUNTED CIRCUIT BOARD, PS-390
C101	1-111-059-11	s	ELECT 220uF 20% 25V
C102	1-164-004-11	s	CERAMIC, CHIP 0.1uF 10% 25V
C103	1-164-004-11	s	CERAMIC, CHIP 0.1uF 10% 25V
C104	1-164-004-11	s	CERAMIC, CHIP 0.1uF 10% 25V
C105	1-164-004-11	s	CERAMIC, CHIP 0.1uF 10% 25V
C106	1-127-520-11	s	ELECT SOLID 68uF 20% 20V
C107	1-164-227-11	s	CERAMIC, CHIP 0.022uF 10% 25V
C108	1-162-964-11	s	CERAMIC, CHIP 0.001uF 10% 50V
C109	1-107-690-11	s	TANTALUM, CHIP 6.8uF 20% 35V
C110	1-164-227-11	s	CERAMIC, CHIP 0.022uF 10% 25V
C111	1-165-176-11	s	CERAMIC 0.047uF 10% 16V
C112	1-107-686-11	s	TANTALUM, CHIP 4.7uF 20% 16V
C113	1-164-227-11	s	CERAMIC, CHIP 0.022uF 10% 25V
C114	1-164-004-11	s	CERAMIC, CHIP 0.1uF 10% 25V
C115	1-164-227-11	s	CERAMIC, CHIP 0.022uF 10% 25V
CN101	1-564-720-11	o	CONNECTOR, 4P, MALE
CN102	1-564-722-11	o	CONNECTOR, 6P, MALE
D101	8-719-044-72	s	DIODE ECL06B025-F
D102	8-719-941-86	s	DIODE DAN202U
FL101	1-117-193-11	s	CERAMIC 3, TERMINAL 1.5uF 50V
IC101	8-759-521-35	s	IC TL5001CD
IC102	8-759-701-36	s	IC NJM3403AM
IC103	8-729-039-34	s	TRANSISTOR SI4435DY-T1
L101	1-421-459-21	s	COIL, CHOKE
L102	1-411-968-11	s	COIL, CHOKE 33uH
Q101	8-729-029-14	s	TRANSISTOR DTC144EUA-T106
Q102	8-729-028-91	s	TRANSISTOR DTA144EUA-T106
Q103	8-729-117-32	s	TRANSISTOR 2SC4177
Q104	8-729-028-91	s	TRANSISTOR DTA144EUA-T106
Q105	8-729-141-75	s	TRANSISTOR 2SD596DV345
Q106	8-729-117-32	s	TRANSISTOR 2SC4177
Q107	8-729-140-63	s	TRANSISTOR 2SA1611-M5M6
R101	1-218-716-11	s	METAL, CHIP 10K 0.50% 1/16W
R102	1-218-716-11	s	METAL, CHIP 10K 0.50% 1/16W
R103	1-218-716-11	s	METAL, CHIP 10K 0.50% 1/16W
R104	1-218-656-11	s	METAL, CHIP 33 0.50% 1/16W
R105	1-219-989-11	s	RES 0.020 0.1% 1W
R106	1-218-740-11	s	METAL, CHIP 100K 0.50% 1/16W
R107	1-218-672-11	s	METAL, CHIP 150 0.50% 1/16W
R108	1-218-717-11	s	METAL, CHIP 11K 0.50% 1/16W
R109	1-218-740-11	s	METAL, CHIP 100K 0.50% 1/16W
R110	1-218-708-11	s	METAL, CHIP 4.7K 0.50% 1/16W
R111	1-218-692-11	s	METAL, CHIP 1K 0.50% 1/16W
R112	1-218-749-11	s	METAL, CHIP 240K 0.50% 1/16W
R113	1-218-740-11	s	METAL, CHIP 100K 0.50% 1/16W
R114	1-218-708-11	s	METAL, CHIP 4.7K 0.50% 1/16W
R115	1-218-748-11	s	METAL, CHIP 220K 0.50% 1/16W
R116	1-216-864-11	s	CONDUCTOR, CHIP 0
R117	1-218-726-11	s	METAL, CHIP 27K 0.50% 1/16W
R118	1-218-697-11	s	METAL, CHIP 1.6K 0.50% 1/16W
R119	1-218-716-11	s	METAL, CHIP 10K 0.50% 1/16W
R120	1-218-740-11	s	METAL, CHIP 100K 0.50% 1/16W

PSW-33 BOARD *For DNW-7/7P/90/90P/90WS/90WSP only

Ref. No. or Q'ty	Part No.	SP	Description
1pc	1-565-977-11	s	CONTACT, FEMALE AWG28-32
1pc	1-569-680-11	o	HOUSING, 2P
1pc	1-662-312-11	o	PRINTED CIRCUIT BOARD, PSW-33
S1	1-762-002-11	s	SWITCH, TOGGLE

PSW-55 BOARD *For DNV-5 only

Ref. No. or Q'ty	Part No.	SP	Description
1pc	1-662-476-11	o	PRINTED CIRCUIT BOARD, PSW-55
CN1	1-566-757-11	s	CONNECTOR, PC BOARD 2P, MALE
S1	1-762-002-11	s	SWITCH, TOGGLE

RC-61 BOARD *For DNW-90WS/90WSP only

Ref. No. or Q'ty	Part No.	SP	Description
1pc	A-8311-974-A	o	MOUNTED CIRCUIT BOARD, RC-61
C6	1-164-156-11	s	CERAMIC, CHIP 0.1uF 25V
C7	1-164-156-11	s	CERAMIC, CHIP 0.1uF 25V
C8	1-164-156-11	s	CERAMIC, CHIP 0.1uF 25V
C9	1-113-500-11	s	TANTALUM, CHIP 100uF 20% 10V
C10	1-164-156-11	s	CERAMIC, CHIP 0.1uF 25V
C11	1-164-156-11	s	CERAMIC, CHIP 0.1uF 25V
C13	1-164-156-11	s	CERAMIC, CHIP 0.1uF 25V
C16	1-164-156-11	s	CERAMIC, CHIP 0.1uF 25V
C18	1-164-156-11	s	CERAMIC, CHIP 0.1uF 25V
C19	1-164-156-11	s	CERAMIC, CHIP 0.1uF 25V
C20	1-164-156-11	s	CERAMIC, CHIP 0.1uF 25V
C21	1-164-156-11	s	CERAMIC, CHIP 0.1uF 25V
C28	1-164-156-11	s	CERAMIC, CHIP 0.1uF 25V
C30	1-164-156-11	s	CERAMIC, CHIP 0.1uF 25V
C32	1-164-156-11	s	CERAMIC, CHIP 0.1uF 25V
C33	1-164-156-11	s	CERAMIC, CHIP 0.1uF 25V
C35	1-164-156-11	s	CERAMIC, CHIP 0.1uF 25V
C36	1-164-156-11	s	CERAMIC, CHIP 0.1uF 25V
C37	1-164-156-11	s	CERAMIC, CHIP 0.1uF 25V
C38	1-164-156-11	s	CERAMIC, CHIP 0.1uF 25V
C45	1-164-156-11	s	CERAMIC, CHIP 0.1uF 25V
C47	1-164-156-11	s	CERAMIC, CHIP 0.1uF 25V
C51	1-113-500-11	s	TANTALUM, CHIP 100uF 20% 10V
CN1	1-778-537-11	o	CONNECTOR, BOARD TO BOARD 66P
CN2	1-778-537-11	o	CONNECTOR, BOARD TO BOARD 66P
IC1	8-759-079-74	s	IC TC74VHC157FS(EL)
IC2	8-759-079-74	s	IC TC74VHC157FS(EL)
IC3	8-759-079-49	s	IC TC74VHC04FS(EL)
IC4	8-759-079-63	s	IC TC74VHC86FS(EL)
IC5	8-759-079-61	s	IC TC74VHC74FS(EL)
IC6	8-759-080-04	s	IC TC74VHC573FS(EL)
IC7	8-759-080-04	s	IC TC74VHC573FS(EL)
IC8	8-759-080-04	s	IC TC74VHC573FS(EL)
IC9	8-759-080-04	s	IC TC74VHC573FS(EL)
IC10	8-759-079-74	s	IC TC74VHC157FS(EL)
IC11	8-759-080-04	s	IC TC74VHC573FS(EL)
IC12	8-759-079-74	s	IC TC74VHC157FS(EL)
IC13	8-752-360-44	s	IC CXK1203AR
IC14	8-752-360-44	s	IC CXK1203AR
IC15	8-752-360-44	s	IC CXK1203AR
IC16	8-752-360-44	s	IC CXK1203AR
IC18	8-752-360-44	s	IC CXK1203AR
IC19	8-752-360-44	s	IC CXK1203AR
IC20	8-752-360-44	s	IC CXK1203AR
IC21	8-752-360-44	s	IC CXK1203AR
IC23-28	8-759-421-88	s	IC SN74LVC821APW-E05
IC30	8-752-360-44	s	IC CXK1203AR
IC33	8-752-360-44	s	IC CXK1203AR
IC35	8-752-360-44	s	IC CXK1203AR
IC38	8-752-360-44	s	IC CXK1203AR
IC41	8-759-080-04	s	IC TC74VHC573FS(EL)
IC42	8-759-080-04	s	IC TC74VHC573FS(EL)
R1	1-216-864-11	s	METAL, CHIP 0 5% 1/16W
R3	1-216-864-11	s	METAL, CHIP 0 5% 1/16W

(RC-61 BOARD)

Ref. No. or Q'ty	Part No.	SP	Description
R4	1-216-864-11	s	METAL, CHIP 0 5% 1/16W
R5	1-216-864-11	s	METAL, CHIP 0 5% 1/16W
R6	1-216-864-11	s	METAL, CHIP 0 5% 1/16W
R8	1-216-864-11	s	METAL, CHIP 0 5% 1/16W

RE-118/118A BOARD

Ref. No. or Q'ty		Part No.	SP	Description
C1		1-104-478-11	s	TANTALUM, CHIP 10uF 20% 35V
C2		1-164-004-11	s	CERAMIC, CHIP 0.1uF 10% 25V
C3		1-107-686-11	s	TANTALUM, CHIP 4.7uF 20% 16V
C4		1-164-004-11	s	CERAMIC, CHIP 0.1uF 10% 25V
C5		1-164-004-11	s	CERAMIC, CHIP 0.1uF 10% 25V
C6		1-107-689-21	s	TANTALUM, CHIP 1uF 20% 35V
C7		1-107-686-11	s	TANTALUM, CHIP 4.7uF 20% 16V
C8		1-164-004-11	s	CERAMIC, CHIP 0.1uF 10% 25V
C9		1-163-133-00	s	CERAMIC, CHIP 470PF 5% 50V
C10		1-164-004-11	s	CERAMIC, CHIP 0.1uF 10% 25V
C11		1-107-689-21	s	TANTALUM, CHIP 1uF 20% 35V
C12		1-107-686-11	s	TANTALUM, CHIP 4.7uF 20% 16V
C13		1-164-004-11	s	CERAMIC, CHIP 0.1uF 10% 25V
C14		1-164-004-11	s	CERAMIC, CHIP 0.1uF 10% 25V
C15		1-107-689-21	s	TANTALUM, CHIP 1uF 20% 35V
C16		1-107-686-11	s	TANTALUM, CHIP 4.7uF 20% 16V
C17		1-164-004-11	s	CERAMIC, CHIP 0.1uF 10% 25V
C18		1-164-004-11	s	CERAMIC, CHIP 0.1uF 10% 25V
C19		1-107-689-21	s	TANTALUM, CHIP 1uF 20% 35V
C20		1-163-017-00	s	CERAMIC, CHIP 0.0047uF 5% 50V
C100		1-107-687-11	s	TANTALUM, CHIP 3.3uF 20% 20V
C101		1-163-037-11	s	CERAMIC, CHIP 0.022uF 10% 25V
C200		1-107-687-11	s	TANTALUM, CHIP 3.3uF 20% 20V
C201		1-163-037-11	s	CERAMIC, CHIP 0.022uF 10% 25V
C301		1-107-687-11	s	TANTALUM, CHIP 3.3uF 20% 20V
C302		1-104-760-11	s	CERAMIC 0.047uF 10% 50V
C401		1-107-687-11	s	TANTALUM, CHIP 3.3uF 20% 20V
C402		1-163-037-11	s	CERAMIC, CHIP 0.022uF 10% 25V
C500		1-107-687-11	s	TANTALUM, CHIP 3.3uF 20% 20V
C501		1-163-037-11	s	CERAMIC, CHIP 0.022uF 10% 25V
C600		1-107-687-11	s	TANTALUM, CHIP 3.3uF 20% 20V
C601		1-164-004-11	s	CERAMIC, CHIP 0.1uF 10% 25V
C700		1-107-687-11	s	TANTALUM, CHIP 3.3uF 20% 20V
C702		1-163-037-11	s	CERAMIC, CHIP 0.022uF 10% 25V
CN1		1-573-337-11	o	CONNECTOR, BOARD TO BOARD 18P
CN2		1-573-337-11	o	CONNECTOR, BOARD TO BOARD 18P
IC1		8-759-066-68	s	IC REF-03GS
IC2	⚠	8-759-260-57	s	IC TL1451ACPW-E05
IC3		8-759-260-57	s	IC TL1451ACPW-E05
IC4		8-759-260-57	s	IC TL1451ACPW-E05
IC5		8-759-260-57	s	IC TL1451ACPW-E05
Q2		8-729-216-22	s	TRANSISTOR 2SA1162
Q4		8-729-027-59	s	TRANSISTOR DTC144EKA-T146
Q101		8-729-027-60	s	TRANSISTOR DTC144TKA-T146
Q201		8-729-027-60	s	TRANSISTOR DTC144TKA-T146
Q301		8-729-027-60	s	TRANSISTOR DTC144TKA-T146
Q401		8-729-027-60	s	TRANSISTOR DTC144TKA-T146
Q501		8-729-027-60	s	TRANSISTOR DTC144TKA-T146
Q601		8-729-027-60	s	TRANSISTOR DTC144TKA-T146
Q701		8-729-027-60	s	TRANSISTOR DTC144TKA-T146
R1		1-216-627-11	s	METAL, CHIP 100 0.5% 1/10W
R2		1-216-675-11	s	METAL, CHIP 10K 0.5% 1/10W
R3		1-216-687-11	s	METAL, CHIP 33K 0.5% 1/10W
R4		1-216-643-11	s	METAL, CHIP 470 0.5% 1/10W
R5		1-216-679-11	s	METAL, CHIP 15K 0.5% 1/10W
R6		1-216-627-11	s	METAL, CHIP 100 0.5% 1/10W
R9		1-216-627-11	s	METAL, CHIP 100 0.5% 1/10W

(RE-118/118A BOARD)

Ref. No. or Q'ty		Part No.	SP	Description
R10		1-216-627-11	s	METAL, CHIP 100 0.5% 1/10W
R100		1-211-998-11	s	METAL, CHIP 4.7K 0.10% 1/10W
R101		1-211-998-11	s	METAL, CHIP 4.7K 0.10% 1/10W
R102		1-216-691-11	s	METAL, CHIP 47K 0.5% 1/10W
R103		1-216-684-11	s	METAL, CHIP 24K 0.50% 1/10W
R104		1-218-760-11	s	METAL, CHIP 220K 0.5% 1/10W
R105	⚠	1-216-684-11	s	METAL, CHIP 24K 0.5% 1/10W
R106	⚠	1-216-664-11	s	METAL, CHIP 3.6K 0.5% 1/10W
R107	⚠	1-216-629-11	s	METAL, CHIP 120 0.5% 1/10W
R200		1-211-998-11	s	METAL, CHIP 4.7K 0.10% 1/10W
R201		1-211-998-11	s	METAL, CHIP 4.7K 0.10% 1/10W
R202		1-216-691-11	s	METAL, CHIP 47K 0.5% 1/10W
R203		1-218-760-11	s	METAL, CHIP 220K 0.5% 1/10W
R204		1-216-684-11	s	METAL, CHIP 24K 0.50% 1/10W
R205		1-208-824-11	s	METAL, CHIP 56K 0.10% 1/10W
R206		1-216-677-11	s	METAL, CHIP 12K 0.5% 1/10W
R301		1-211-998-11	s	METAL, CHIP 4.7K 0.10% 1/10W
R302		1-211-998-11	s	METAL, CHIP 4.7K 0.10% 1/10W
R304		1-216-689-11	s	METAL, CHIP 39K 0.5% 1/10W
R305		1-218-760-11	s	METAL, CHIP 220K 0.5% 1/10W
R306		1-216-675-11	s	METAL, CHIP 10K 0.5% 1/10W
R307		1-218-367-11	s	METAL, CHIP 10K 0.10% 1/10W
R308		1-216-662-11	s	METAL, CHIP 3K 0.5% 1/10W
R309		1-216-639-11	s	METAL, CHIP 330 0.5% 1/10W
R401		1-211-998-11	s	METAL, CHIP 4.7K 0.10% 1/10W
R402		1-211-998-11	s	METAL, CHIP 4.7K 0.10% 1/10W
R403		1-216-687-11	s	METAL, CHIP 33K 0.5% 1/10W
R404		1-216-691-11	s	METAL, CHIP 47K 0.5% 1/10W
R405		1-218-760-11	s	METAL, CHIP 220K 0.5% 1/10W
R406		1-216-667-11	s	METAL, CHIP 4.7K 0.5% 1/10W
R407		1-218-367-11	s	METAL, CHIP 10K 0.10% 1/10W
R408		1-216-674-11	s	METAL, CHIP 9.1K 0.5% 1/10W
R409		1-219-713-11	s	METAL, CHIP 620 0.10% 1/10W
R500		1-211-998-11	s	METAL, CHIP 4.7K 0.10% 1/10W
R501		1-211-998-11	s	METAL, CHIP 4.7K 0.10% 1/10W
R502		1-216-687-11	s	METAL, CHIP 33K 0.5% 1/10W
R503		1-216-691-11	s	METAL, CHIP 47K 0.5% 1/10W
R504		1-216-667-11	s	METAL, CHIP 4.7K 0.5% 1/10W
R505		1-218-760-11	s	METAL, CHIP 220K 0.5% 1/10W
R506		1-211-998-11	s	METAL, CHIP 4.7K 0.10% 1/10W
R507		1-216-662-11	s	METAL, CHIP 3K 0.5% 1/10W
R508		1-216-295-91	s	RES, CHIP 0
R600		1-211-998-11	s	METAL, CHIP 4.7K 0.10% 1/10W
R601		1-211-998-11	s	METAL, CHIP 4.7K 0.10% 1/10W
R602		1-216-687-11	s	METAL, CHIP 33K 0.5% 1/10W
R603		1-216-689-11	s	METAL, CHIP 39K 0.5% 1/10W
R604		1-218-760-11	s	METAL, CHIP 220K 0.5% 1/10W
R605		1-216-655-11	s	METAL, CHIP 1.5K 0.5% 1/10W
R606		1-219-710-11	s	METAL, CHIP 100 0.10% 1/10W
R607		1-211-998-11	s	METAL, CHIP 4.7K 0.10% 1/10W
R608		1-216-684-11	s	METAL, CHIP 24K 0.5% 1/10W
R609		1-216-667-11	s	METAL, CHIP 4.7K 0.5% 1/10W
R700		1-211-998-11	s	METAL, CHIP 4.7K 0.10% 1/10W
R701		1-211-998-11	s	METAL, CHIP 4.7K 0.10% 1/10W
R702		1-216-687-11	s	METAL, CHIP 33K 0.5% 1/10W
R703		1-216-691-11	s	METAL, CHIP 47K 0.5% 1/10W
R706		1-216-684-11	s	METAL, CHIP 24K 0.50% 1/10W
R707		1-218-760-11	s	METAL, CHIP 220K 0.5% 1/10W
R708		1-216-687-11	s	METAL, CHIP 33K 0.5% 1/10W

(RE-118/118A BOARD)

Ref. No. or Q'ty		Part No.	SP	Description
R709		1-216-662-11	s	METAL, CHIP 3K 0.5% 1/10W
R710		1-216-696-11	s	METAL, CHIP 75K 0.5% 1/10W
R711		1-216-295-91	s	RES, CHIP 0 [Except DNV-5]

RE-119/119A BOARD

Ref. No. or Q'ty	Part No.	SP	Description
2pcs	3-729-061-01	s	SCREW M2X4.5 (TYPE 1)
C1	1-127-513-00	s	ALUMN SOLID 15uF 20% 25V
C2	1-164-004-11	s	CERAMIC, CHIP 0.1uF 10% 25V
C3	1-126-399-11	s	ELECT, CHIP 10uF 20% 35V
C4	1-164-004-11	s	CERAMIC, CHIP 0.1uF 10% 25V
C5	1-126-399-11	s	ELECT, CHIP 10uF 20% 35V
C6	1-164-004-11	s	CERAMIC, CHIP 0.1uF 10% 25V
C7	1-107-686-11	s	TANTALUM, CHIP 4.7uF 20% 16V
C8	1-163-009-11	s	CERAMIC, CHIP 0.001uF 10% 50V
C100	1-164-004-11	s	CERAMIC, CHIP 0.1uF 10% 25V
C101	1-127-513-00	s	ALUMN SOLID 15uF 20% 25V
C102	1-164-004-11	s	CERAMIC, CHIP 0.1uF 10% 25V
C103	1-113-577-11	s	ELECT SOLID 47uF 20% 16V
C104	1-164-004-11	s	CERAMIC, CHIP 0.1uF 10% 25V
C105	1-111-008-11	s	ELECT 180uF 20% 10V
C200	1-164-004-11	s	CERAMIC, CHIP 0.1uF 10% 25V
C201	1-127-513-00	s	ALUMN SOLID 15uF 20% 25V
C202	1-164-004-11	s	CERAMIC, CHIP 0.1uF 10% 25V
C203	1-113-577-11	s	ELECT SOLID 47uF 20% 16V
C204	1-164-004-11	s	CERAMIC, CHIP 0.1uF 10% 25V
C205	1-111-008-11	s	ELECT 180uF 20% 10V
C300	1-164-004-11	s	CERAMIC, CHIP 0.1uF 10% 25V
C301	1-163-037-11	s	CERAMIC, CHIP 0.022uF 10% 25V
C302	1-163-037-11	s	CERAMIC, CHIP 0.022uF 10% 25V
C303	1-127-513-00	s	ALUMN SOLID 15uF 20% 25V
C304	1-164-004-11	s	CERAMIC, CHIP 0.1uF 10% 25V
C305	1-113-577-11	s	ELECT SOLID 47uF 20% 16V
C306	1-164-004-11	s	CERAMIC, CHIP 0.1uF 10% 25V
C307	1-164-004-11	s	CERAMIC, CHIP 0.1uF 10% 25V
C308	1-111-034-11	s	ELECT 220uF 20% 16V
C309	1-111-034-11	s	ELECT 220uF 20% 16V
C400	1-164-004-11	s	CERAMIC, CHIP 0.1uF 10% 25V
C401	1-163-037-11	s	CERAMIC, CHIP 0.022uF 10% 25V
C402	1-163-037-11	s	CERAMIC, CHIP 0.022uF 10% 25V
C403	1-127-513-00	s	ALUMN SOLID 15uF 20% 25V
C404	1-164-004-11	s	CERAMIC, CHIP 0.1uF 10% 25V
C405	1-113-577-11	s	ELECT SOLID 47uF 20% 16V
C406	1-164-004-11	s	CERAMIC, CHIP 0.1uF 10% 25V
C407	1-111-034-11	s	ELECT 220uF 20% 16V
C500	1-164-004-11	s	CERAMIC, CHIP 0.1uF 10% 25V
C501	1-163-037-11	s	CERAMIC, CHIP 0.022uF 10% 25V
C502	1-163-037-11	s	CERAMIC, CHIP 0.022uF 10% 25V
C503	1-127-513-00	s	ALUMN SOLID 15uF 20% 25V
C504	1-164-004-11	s	CERAMIC, CHIP 0.1uF 10% 25V
C505	1-113-577-11	s	ELECT SOLID 47uF 20% 16V
C506	1-164-004-11	s	CERAMIC, CHIP 0.1uF 10% 25V
C507	1-111-034-11	s	ELECT 220uF 20% 16V
C600	1-164-004-11	s	CERAMIC, CHIP 0.1uF 10% 25V
C601	1-163-037-11	s	CERAMIC, CHIP 0.022uF 10% 25V
C602	1-163-037-11	s	CERAMIC, CHIP 0.022uF 10% 25V
C603	1-127-513-00	s	ALUMN SOLID 15uF 20% 25V
C604	1-164-004-11	s	CERAMIC, CHIP 0.1uF 10% 25V
C605	1-113-577-11	s	ELECT SOLID 47uF 20% 16V
C606	1-164-004-11	s	CERAMIC, CHIP 0.1uF 10% 25V
C607	1-111-034-11	s	ELECT 220uF 20% 16V
C608	1-164-004-11	s	CERAMIC, CHIP 0.1uF 10% 25V
C700	1-164-004-11	s	CERAMIC, CHIP 0.1uF 10% 25V
C701	1-127-513-00	s	ALUMN SOLID 15uF 20% 25V

(RE-119/119A BOARD)

Ref. No. or Q'ty	Part No.	SP	Description
C702	1-164-004-11	s	CERAMIC, CHIP 0.1uF 10% 25V
C703	1-164-004-11	s	CERAMIC, CHIP 0.1uF 10% 25V
C704	1-113-577-11	s	ELECT SOLID 47uF 20% 16V
C705	1-113-577-11	s	ELECT SOLID 47uF 20% 16V
C706	1-164-004-11	s	CERAMIC, CHIP 0.1uF 10% 25V
C707	1-111-110-11	s	ELECT 39uF 20% 50V
C708	1-164-004-11	s	CERAMIC, CHIP 0.1uF 10% 25V
C709	1-164-004-11	s	CERAMIC, CHIP 0.1uF 10% 25V
C710	1-111-032-11	s	ELECT 120uF 20% 16V
C711	1-111-032-11	s	ELECT 120uF 20% 16V
C712	1-111-110-11	s	ELECT 39uF 20% 50V
C713	1-164-004-11	s	CERAMIC, CHIP 0.1uF 10% 25V
CN1	1-573-309-11	o	CONNECTOR, BOARD TO BOARD 18P
CN2	1-573-309-11	o	CONNECTOR, BOARD TO BOARD 18P
CN3	1-695-453-11	s	CONNECTOR, BOARD TO BOARD 50P
D1-6	8-719-104-34	s	DIODE 1S2835
D100	8-719-048-17	s	DIODE MBRS130LT3
D200	8-719-048-17	s	DIODE MBRS130LT3
D300	8-719-938-75	s	DIODE SB05-05CP
D301	8-719-938-75	s	DIODE SB05-05CP
D400	8-719-938-75	s	DIODE SB05-05CP
D401	8-719-938-75	s	DIODE SB05-05CP
D500	8-719-938-75	s	DIODE SB05-05CP
D501	8-719-938-75	s	DIODE SB05-05CP
D600	8-719-938-75	s	DIODE SB05-05CP
D601	8-719-938-75	s	DIODE SB05-05CP
D700	8-719-989-93	s	DIODE SB01-15CP
D701	8-719-938-75	s	DIODE SB05-05CP
D702	8-719-938-75	s	DIODE SB05-05CP
IC1	8-759-710-88	s	IC NJM431U
IC2	8-759-927-99	s	IC MB3761PF
IC100	8-729-021-17	s	TRANSISTOR SI9947DY-T1
IC200	8-729-021-17	s	TRANSISTOR SI9947DY-T1
IC300	8-729-039-35	s	TRANSISTOR SI9435DY-T1
IC400	8-729-039-35	s	TRANSISTOR SI9435DY-T1
IC500	8-729-039-35	s	TRANSISTOR SI9435DY-T1
IC600	8-729-039-35	s	TRANSISTOR SI9435DY-T1
IC700	8-729-039-35	s	TRANSISTOR SI9435DY-T1
L100	1-409-579-11	s	COIL, CHOKE 8.2uH
L101	1-409-722-11	s	COIL, CHOKE 220uH
L102	1-409-579-11	s	COIL, CHOKE 8.2uH
L200	1-409-579-11	s	COIL, CHOKE 8.2uH
L201	1-409-722-11	s	COIL, CHOKE 220uH
L202	1-409-579-11	s	COIL, CHOKE 8.2uH
L300	1-409-579-11	s	COIL, CHOKE 8.2uH
L301	1-411-967-11	s	COIL, CHOKE 33uH
L302	1-409-579-11	s	COIL, CHOKE 8.2uH
L303	1-409-579-11	s	COIL, CHOKE 8.2uH
L400	1-409-579-11	s	COIL, CHOKE 8.2uH
L401	1-411-967-11	s	COIL, CHOKE 33uH
L402	1-409-579-11	s	COIL, CHOKE 8.2uH
L500	1-409-579-11	s	COIL, CHOKE 8.2uH
L501	1-411-967-11	s	COIL, CHOKE 33uH
L502	1-409-579-11	s	COIL, CHOKE 8.2uH
L600	1-409-579-11	s	COIL, CHOKE 8.2uH
L601	1-411-967-11	s	COIL, CHOKE 33uH
L602	1-409-579-11	s	COIL, CHOKE 8.2uH
L700	1-409-579-11	s	COIL, CHOKE 8.2uH

(RE-119/119A BOARD)

Ref. No. or Q'ty	Part No.	SP	Description
L701	1-424-642-11	s	COIL, CHOKE 47uH
L702	1-409-579-11	s	COIL, CHOKE 8.2uH
L703	1-409-579-11	s	COIL, CHOKE 8.2uH
Q1	8-729-118-56	s	TRANSISTOR 2SK852-X2
Q2	8-729-027-38	s	TRANSISTOR DTA144EKA-T146
Q3	8-729-120-28	s	TRANSISTOR 2SC1623-L5L6
Q4	8-729-216-22	s	TRANSISTOR 2SA1162
Q5	8-729-120-28	s	TRANSISTOR 2SC1623-L5L6
Q6	8-729-120-28	s	TRANSISTOR 2SC1623-L5L6
Q100	8-729-120-28	s	TRANSISTOR 2SC1623-L5L6
Q101	8-729-112-65	s	TRANSISTOR 2SA1462-Y33
Q200	8-729-120-28	s	TRANSISTOR 2SC1623-L5L6
Q201	8-729-112-65	s	TRANSISTOR 2SA1462-Y33
Q300	8-729-012-35	s	TRANSISTOR 2SK711-BL
Q301	8-729-120-28	s	TRANSISTOR 2SC1623-L5L6
Q302	8-729-112-65	s	TRANSISTOR 2SA1462-Y33
Q303	8-729-031-39	s	TRANSISTOR MTD20N03HDL
Q400	8-729-012-35	s	TRANSISTOR 2SK711-BL
Q401	8-729-120-28	s	TRANSISTOR 2SC1623-L5L6
Q402	8-729-112-65	s	TRANSISTOR 2SA1462-Y33
Q403	8-729-031-39	s	TRANSISTOR MTD20N03HDL
Q500	8-729-012-35	s	TRANSISTOR 2SK711-BL
Q501	8-729-120-28	s	TRANSISTOR 2SC1623-L5L6
Q502	8-729-112-65	s	TRANSISTOR 2SA1462-Y33
Q503	8-729-031-39	s	TRANSISTOR MTD20N03HDL
Q600	8-729-012-35	s	TRANSISTOR 2SK711-BL
Q601	8-729-120-28	s	TRANSISTOR 2SC1623-L5L6
Q602	8-729-112-65	s	TRANSISTOR 2SA1462-Y33
Q603	8-729-031-39	s	TRANSISTOR MTD20N03HDL
Q604	8-729-120-28	s	TRANSISTOR 2SC1623-L5L6
Q700	8-729-120-28	s	TRANSISTOR 2SC1623-L5L6
Q701	8-729-112-65	s	TRANSISTOR 2SA1462-Y33
Q702	8-729-012-35	s	TRANSISTOR 2SK711-BL
Q703	8-729-120-28	s	TRANSISTOR 2SC1623-L5L6
R1	1-216-699-11	s	METAL, CHIP 100K 0.5% 1/10W
R2	1-216-686-11	s	METAL, CHIP 30K 0.5% 1/10W
R3	1-216-674-11	s	METAL, CHIP 9.1K 0.5% 1/10W
R4	1-216-696-11	s	METAL, CHIP 75K 0.5% 1/10W
R5	1-216-677-11	s	METAL, CHIP 12K 0.5% 1/10W
R6	1-216-655-11	s	METAL, CHIP 1.5K 0.5% 1/10W
R7	1-216-686-11	s	METAL, CHIP 30K 0.5% 1/10W
R8	1-216-691-11	s	METAL, CHIP 47K 0.5% 1/10W
R9	1-216-691-11	s	METAL, CHIP 47K 0.5% 1/10W
R10	1-218-768-11	s	METAL 470K 0.5% 1/10W
R11	1-216-699-11	s	METAL, CHIP 100K 0.5% 1/10W
R12	1-216-691-11	s	METAL, CHIP 47K 0.5% 1/10W
R13	1-216-603-11	s	METAL, CHIP 10 0.5% 1/10W
R100	1-216-675-11	s	METAL, CHIP 10K 0.5% 1/10W
R101	1-216-603-11	s	METAL, CHIP 10 0.5% 1/10W
R102	1-216-693-11	s	METAL, CHIP 56K 0.5% 1/10W
R103	1-216-683-11	s	METAL, CHIP 22K 0.5% 1/10W
R200	1-216-675-11	s	METAL, CHIP 10K 0.5% 1/10W
R201	1-216-603-11	s	METAL, CHIP 10 0.5% 1/10W
R202	1-216-693-11	s	METAL, CHIP 56K 0.5% 1/10W
R203	1-216-683-11	s	METAL, CHIP 22K 0.5% 1/10W
R300	1-216-623-11	s	METAL, CHIP 68 0.5% 1/10W
R301	1-216-679-11	s	METAL, CHIP 15K 0.5% 1/10W
R302	1-216-675-11	s	METAL, CHIP 10K 0.5% 1/10W

(RE-119/119A BOARD)

Ref. No. or Q'ty	Part No.	SP	Description
R303	1-216-619-11	s	METAL, CHIP 47 0.5% 1/10W
R304	1-216-627-11	s	METAL, CHIP 100 0.5% 1/10W
R305	1-216-675-11	s	METAL, CHIP 10K 0.5% 1/10W
R306	1-216-675-11	s	METAL, CHIP 10K 0.5% 1/10W
R307	1-216-687-11	s	METAL, CHIP 33K 0.5% 1/10W
R308	1-216-683-11	s	METAL, CHIP 22K 0.5% 1/10W
R309	1-216-687-11	s	METAL, CHIP 33K 0.5% 1/10W
R310	1-216-683-11	s	METAL, CHIP 22K 0.5% 1/10W
R400	1-216-623-11	s	METAL, CHIP 68 0.5% 1/10W
R401	1-216-689-11	s	METAL, CHIP 39K 0.5% 1/10W
R402	1-216-675-11	s	METAL, CHIP 10K 0.5% 1/10W
R403	1-216-619-11	s	METAL, CHIP 47 0.5% 1/10W
R404	1-216-619-11	s	METAL, CHIP 47 0.5% 1/10W
R405	1-216-675-11	s	METAL, CHIP 10K 0.5% 1/10W
R406	1-216-675-11	s	METAL, CHIP 10K 0.5% 1/10W
R407	1-216-675-11	s	METAL, CHIP 10K 0.5% 1/10W
R408	1-216-690-11	s	METAL, CHIP 43K 0.5% 1/10W
R500	1-216-623-11	s	METAL, CHIP 68 0.5% 1/10W
R501	1-216-689-11	s	METAL, CHIP 39K 0.5% 1/10W
R502	1-216-675-11	s	METAL, CHIP 10K 0.5% 1/10W
R503	1-216-619-11	s	METAL, CHIP 47 0.5% 1/10W
R504	1-216-627-11	s	METAL, CHIP 100 0.5% 1/10W
R505	1-216-675-11	s	METAL, CHIP 10K 0.5% 1/10W
R506	1-216-675-11	s	METAL, CHIP 10K 0.5% 1/10W
R507	1-216-683-11	s	METAL, CHIP 22K 0.5% 1/10W
R508	1-216-691-11	s	METAL, CHIP 47K 0.5% 1/10W
R600	1-216-623-11	s	METAL, CHIP 68 0.5% 1/10W
R601	1-216-689-11	s	METAL, CHIP 39K 0.5% 1/10W
R602	1-216-683-11	s	METAL, CHIP 22K 0.5% 1/10W
R603	1-216-619-11	s	METAL, CHIP 47 0.5% 1/10W
R604	1-216-627-11	s	METAL, CHIP 100 0.5% 1/10W
R605	1-216-675-11	s	METAL, CHIP 10K 0.5% 1/10W
R606	1-216-675-11	s	METAL, CHIP 10K 0.5% 1/10W
R607	1-216-692-11	s	METAL, CHIP 51K 0.5% 1/10W
R608	1-216-685-11	s	METAL, CHIP 27K 0.5% 1/10W
R609	1-216-685-11	s	METAL, CHIP 27K 0.5% 1/10W
R700	1-216-623-11	s	METAL, CHIP 68 0.5% 1/10W
R703	1-216-603-11	s	METAL, CHIP 10 0.5% 1/10W
R704	1-216-603-11	s	METAL, CHIP 10 0.5% 1/10W
R705	1-216-603-11	s	METAL, CHIP 10 0.5% 1/10W
R706	1-216-691-11	s	METAL, CHIP 47K 0.5% 1/10W
R707	1-216-661-11	s	METAL, CHIP 2.7K 0.5% 1/10W
R708	1-216-691-11	s	METAL, CHIP 47K 0.5% 1/10W
R709	1-216-675-11	s	METAL, CHIP 10K 0.5% 1/10W
R710	1-216-695-11	s	METAL, CHIP 68K 0.5% 1/10W
R711	1-216-685-11	s	METAL, CHIP 27K 0.5% 1/10W
R712	1-216-685-11	s	METAL, CHIP 27K 0.5% 1/10W
R713	1-216-295-91	s	RES, CHIP 0 [For DNV-5]
R714	1-216-295-91	s	RES, CHIP 0 [Except DNV-5]
T700	1-426-885-11	s	TRANSFORMER, DC-DC CONVERTER

RX-26 BOARD

Ref. No. or Q'ty	Part No.	SP	Description
1pc	1-662-328-11	o	PRINTED CIRCUIT BOARD, RX-26
C101	1-104-919-11	s	TANTALUM, CHIP 10uF 20% 25V
C102	1-164-227-11	s	CERAMIC, CHIP 0.022uF 10% 25V
C103	1-163-037-11	s	CERAMIC, CHIP 0.022uF 10% 25V
C104	1-104-913-11	s	TANTALUM, CHIP 10uF 20% 16V
C105	1-162-927-11	s	CERAMIC, CHIP 100PF 5% 50V
C106	1-162-927-11	s	CERAMIC, CHIP 100PF 5% 50V
CN101	1-569-775-21	s	PIN, CONNECTOR (1.5MM)(SMD) 5P
CN102	1-568-230-11	o	SOCKET, CONNECTOR 15P, FEMALE
IC101	8-759-700-84	s	IC NJM2041M-D
R101	1-218-691-11	s	METAL, CHIP 910 0.50% 1/16W
R102	1-218-696-11	s	METAL, CHIP 1.5K 0.50% 1/16W
R103	1-218-701-11	s	METAL, CHIP 2.4K 0.50% 1/16W
R104	1-218-701-11	s	METAL, CHIP 2.4K 0.50% 1/16W
R105	1-218-696-11	s	METAL, CHIP 1.5K 0.50% 1/16W
R106	1-218-696-11	s	METAL, CHIP 1.5K 0.50% 1/16W
R107	1-218-668-11	s	METAL, CHIP 100 0.50% 1/16W
R108	1-216-627-11	s	METAL, CHIP 100 0.5% 1/10W
R109	1-218-708-11	s	METAL, CHIP 4.7K 0.50% 1/16W
R110	1-218-708-11	s	METAL, CHIP 4.7K 0.50% 1/16W

SW-780 BOARD *For DNW-7/7P/90/90P/90WS/90WSP only

Ref. No. or Q'ty	Part No.	SP	Description
1pc	1-662-346-11	o	PRINTED CIRCUIT BOARD, SW-780
1pc	3-603-713-01	o	HOLDER SWITCH
1pc	3-729-013-41	s	SCREW M1.4X3.5, WASHERHEAD(+P)
CN18	1-566-767-11	o	CONNECTOR 12P, MALE
R100-108	1-218-692-11	s	METAL, CHIP 1K 0.50% 1/16W
R110	1-218-692-11	s	METAL, CHIP 1K 0.50% 1/16W
R111	1-218-692-11	s	METAL, CHIP 1K 0.50% 1/16W
S100	1-762-001-11	s	SWITCH, TOGGLE
S101	1-762-020-11	s	SWITCH, TOGGLE
S102	1-762-000-11	s	SWITCH, TOGGLE
S103	1-762-019-11	s	SWITCH, TOGGLE
S104	1-762-000-11	s	SWITCH, TOGGLE
S105	1-762-000-11	s	SWITCH, TOGGLE

SW-789 BOARD *For DNW-7/7P/90/90P/90WS/90WSP only

Ref. No. or Q'ty	Part No.	SP	Description
1pc	1-662-335-11	o	PRINTED CIRCUIT BOARD, SW-789
CN20	1-690-107-11	o	CONNECTOR, BOARD TO BOARD 12P
CN701	1-565-876-11	o	CONNECTOR 4P, MALE
FB1	1-412-694-11	s	INDUCTOR, BEAD
FB2	1-412-694-11	s	INDUCTOR, BEAD
RV201	1-225-340-11	s	RES, VAR, CARBON 10K
S201	1-570-282-21	s	SWITCH, KEYBOARD
S202	1-571-679-11	s	SWITCH, TOGGLE
S203	1-571-416-11	s	SWITCH, TOGGLE

SW-808 BOARD *For DNW-7/7P/90/90P/90WS/90WSP only

Ref. No. or Q'ty	Part No.	SP	Description
1pc	1-662-334-11	o	PRINTED CIRCUIT BOARD, SW-808
CN701	1-566-759-11	o	CONNECTOR 4P, MALE
SW1	1-473-315-11	s	ENCODER, ROTARY

SW-823 BOARD *For DNW-7/7P/90/90P/90WS/90WSP only

Ref. No. or Q'ty	Part No.	SP	Description
1pc	1-662-331-11	o	PRINTED CIRCUIT BOARD, SW-823
CN1	1-564-718-11	o	CONNECTOR, 2P, MALE
CN3	1-580-055-21	s	PIN, CONNECTOR (1.5MM)(SMD) 2P
S1	1-762-002-11	s	SWITCH, TOGGLE

SW-873 BOARD *For DNV-5 only

Ref. No. or Q'ty	Part No.	SP	Description
1pc	A-8311-245-A	o	MOUNTED CIRCUIT BOARD, SW-873
CN1	1-565-877-11	s	CONNECTOR, PC BOARD 5P, MALE
CN2	1-565-875-11	o	CONNECTOR 3P, MALE
R100-105	1-216-651-11	s	METAL, CHIP 1K 0.5% 1/10W
S100	1-570-986-11	s	SWITCH, TOGGLE
S101	1-571-396-11	s	SWITCH, TOGGLE
S102	1-570-984-11	s	SWITCH, TOGGLE

SW-882 BOARD *For DNV-5 only

Ref. No. or Q'ty	Part No.	SP	Description
1pc	1-662-479-11	o	PRINTED CIRCUIT BOARD, SW-882
CN701	1-566-759-11	o	CONNECTOR 4P, MALE
SW1	1-473-315-11	s	ENCODER, ROTARY

TC-80/80A BOARD

Ref. No. or Q'ty	Part No.	SP	Description
1pc	A-8277-539-A	o	MOUNTED CIRCUIT BOARD, TC-80A [For DNV-5]
	A-8277-565-A	o	MOUNTED CIRCUIT BOARD, TC-80 [Except DNV-5]
BT801	1-528-229-11	o	BATTERY, LITHIUM CR-2450
C101	1-164-227-11	s	CERAMIC, CHIP 0.022uF 10% 25V
C102	1-115-581-11	s	TANTALUM, CHIP 100uF 20% 16V
C103	1-164-227-11	s	CERAMIC, CHIP 0.022uF 10% 25V
C104	1-164-227-11	s	CERAMIC, CHIP 0.022uF 10% 25V
C105	1-104-914-11	s	TANTALUM, CHIP 22uF 20% 16V
C106	1-104-914-11	s	TANTALUM, CHIP 22uF 20% 16V
C107	1-104-851-11	s	TANTALUM, CHIP 10uF 20% 10V
C108	1-164-227-11	s	CERAMIC, CHIP 0.022uF 10% 25V
C110	1-162-921-11	s	CERAMIC, CHIP 33PF 5% 50V
C111	1-162-921-11	s	CERAMIC, CHIP 33PF 5% 50V
C112	1-113-642-11	s	TANTALUM, CHIP 47uF 20% 10V
C113	1-115-581-11	s	TANTALUM, CHIP 100uF 20% 16V
C114	1-162-927-11	s	CERAMIC, CHIP 100PF 5% 50V
C115	1-162-921-11	s	CERAMIC, CHIP 33PF 5% 50V
C116	1-104-851-11	s	TANTALUM, CHIP 10uF 20% 10V
C117	1-162-923-11	s	CERAMIC, CHIP 47PF 5% 50V
C118	1-104-851-11	s	TANTALUM, CHIP 10uF 20% 10V
C119	1-107-686-11	s	TANTALUM, CHIP 4.7uF 20% 16V
C120	1-104-851-11	s	TANTALUM, CHIP 10uF 20% 10V
C121	1-110-569-11	s	TANTALUM, CHIP 47uF 20% 6.3V
C122	1-104-851-11	s	TANTALUM, CHIP 10uF 20% 10V
C123	1-104-851-11	s	TANTALUM, CHIP 10uF 20% 10V
C125	1-104-553-11	s	FILM, CHIP 0.015uF 5% 16V
C126	1-162-923-11	s	CERAMIC, CHIP 47PF 5% 50V
C127	1-162-927-11	s	CERAMIC, CHIP 100PF 5% 50V
C128	1-164-227-11	s	CERAMIC, CHIP 0.022uF 10% 25V
C129	1-164-227-11	s	CERAMIC, CHIP 0.022uF 10% 25V
C130	1-104-851-11	s	TANTALUM, CHIP 10uF 20% 10V
C131	1-107-686-11	s	TANTALUM, CHIP 4.7uF 20% 16V
C132	1-107-686-11	s	TANTALUM, CHIP 4.7uF 20% 16V
C133	1-162-969-11	s	CERAMIC, CHIP 0.0068uF 10% 25V
C134	1-162-927-11	s	CERAMIC, CHIP 100PF 5% 50V
C135	1-162-927-11	s	CERAMIC, CHIP 100PF 5% 50V
C150	1-104-851-11	s	TANTALUM, CHIP 10uF 20% 10V
C151	1-164-156-11	s	CERAMIC, CHIP 0.1uF 25V
C152	1-104-851-11	s	TANTALUM, CHIP 10uF 20% 10V
C153	1-164-156-11	s	CERAMIC, CHIP 0.1uF 25V
C154	1-164-156-11	s	CERAMIC, CHIP 0.1uF 25V
C155	1-164-156-11	s	CERAMIC, CHIP 0.1uF 25V
C156	1-104-851-11	s	TANTALUM, CHIP 10uF 20% 10V
C157	1-164-227-11	s	CERAMIC, CHIP 0.022uF 10% 25V
C158	1-104-851-11	s	TANTALUM, CHIP 10uF 20% 10V
C159	1-164-227-11	s	CERAMIC, CHIP 0.022uF 10% 25V
C160	1-162-964-11	s	CERAMIC, CHIP 0.001uF 10% 50V
C162	1-162-964-11	s	CERAMIC, CHIP 0.001uF 10% 50V
C163	1-164-156-11	s	CERAMIC, CHIP 0.1uF 25V
C164	1-162-966-11	s	CERAMIC, CHIP 0.0022uF 10% 50V
C165	1-162-927-11	s	CERAMIC, CHIP 100PF 5% 50V
C166	1-162-927-11	s	CERAMIC, CHIP 100PF 5% 50V
C167	1-162-927-11	s	CERAMIC, CHIP 100PF 5% 50V
C201	1-164-227-11	s	CERAMIC, CHIP 0.022uF 10% 25V
C202	1-115-581-11	s	TANTALUM, CHIP 100uF 20% 16V
C203	1-164-227-11	s	CERAMIC, CHIP 0.022uF 10% 25V

http://getMANUAL.com

(TC-80/80A BOARD)

Ref. No. or Q'ty	Part No.	SP	Description
C204	1-164-227-11	s	CERAMIC, CHIP 0.022uF 10% 25V
C205	1-104-914-11	s	TANTALUM, CHIP 22uF 20% 16V
C206	1-104-914-11	s	TANTALUM, CHIP 22uF 20% 16V
C207	1-104-851-11	s	TANTALUM, CHIP 10uF 20% 10V
C208	1-164-227-11	s	CERAMIC, CHIP 0.022uF 10% 25V
C209	1-104-851-11	s	TANTALUM, CHIP 10uF 20% 10V
C210	1-162-921-11	s	CERAMIC, CHIP 33PF 5% 50V
C211	1-162-921-11	s	CERAMIC, CHIP 33PF 5% 50V
C212	1-113-642-11	s	TANTALUM, CHIP 47uF 20% 10V
C213	1-115-581-11	s	TANTALUM, CHIP 100uF 20% 16V
C214	1-162-927-11	s	CERAMIC, CHIP 100PF 5% 50V
C215	1-162-921-11	s	CERAMIC, CHIP 33PF 5% 50V
C216	1-104-851-11	s	TANTALUM, CHIP 10uF 20% 10V
C217	1-162-923-11	s	CERAMIC, CHIP 47PF 5% 50V
C218	1-104-851-11	s	TANTALUM, CHIP 10uF 20% 10V
C219	1-107-686-11	s	TANTALUM, CHIP 4.7uF 20% 16V
C220	1-104-851-11	s	TANTALUM, CHIP 10uF 20% 10V
C221	1-110-569-11	s	TANTALUM, CHIP 47uF 20% 6.3V
C222	1-104-851-11	s	TANTALUM, CHIP 10uF 20% 10V
C223	1-104-851-11	s	TANTALUM, CHIP 10uF 20% 10V
C224	1-164-156-11	s	CERAMIC, CHIP 0.1uF 25V
C225	1-104-553-11	s	FILM, CHIP 0.015uF 5% 16V
C226	1-162-923-11	s	CERAMIC, CHIP 47PF 5% 50V
C227	1-162-927-11	s	CERAMIC, CHIP 100PF 5% 50V
C228	1-164-227-11	s	CERAMIC, CHIP 0.022uF 10% 25V
C229	1-164-227-11	s	CERAMIC, CHIP 0.022uF 10% 25V
C230	1-104-851-11	s	TANTALUM, CHIP 10uF 20% 10V
C231	1-107-686-11	s	TANTALUM, CHIP 4.7uF 20% 16V
C232	1-107-686-11	s	TANTALUM, CHIP 4.7uF 20% 16V
C233	1-162-969-11	s	CERAMIC, CHIP 0.0068uF 10% 25V
C234	1-162-927-11	s	CERAMIC, CHIP 100PF 5% 50V
C235	1-162-927-11	s	CERAMIC, CHIP 100PF 5% 50V
C301	1-164-227-11	s	CERAMIC, CHIP 0.022uF 10% 25V
C302	1-164-227-11	s	CERAMIC, CHIP 0.022uF 10% 25V
C303	1-115-581-11	s	TANTALUM, CHIP 100uF 20% 16V
C304	1-162-921-11	s	CERAMIC, CHIP 33PF 5% 50V
C305	1-104-851-11	s	TANTALUM, CHIP 10uF 20% 10V
C306	1-162-923-11	s	CERAMIC, CHIP 47PF 5% 50V
C307	1-104-851-11	s	TANTALUM, CHIP 10uF 20% 10V
C308	1-107-686-11	s	TANTALUM, CHIP 4.7uF 20% 16V
C309	1-104-851-11	s	TANTALUM, CHIP 10uF 20% 10V
C310	1-110-569-11	s	TANTALUM, CHIP 47uF 20% 6.3V
C311	1-104-851-11	s	TANTALUM, CHIP 10uF 20% 10V
C312	1-104-851-11	s	TANTALUM, CHIP 10uF 20% 10V
C314	1-104-553-11	s	FILM, CHIP 0.015uF 5% 16V
C315	1-162-923-11	s	CERAMIC, CHIP 47PF 5% 50V
C316	1-162-927-11	s	CERAMIC, CHIP 100PF 5% 50V
C317	1-164-227-11	s	CERAMIC, CHIP 0.022uF 10% 25V
C318	1-164-227-11	s	CERAMIC, CHIP 0.022uF 10% 25V
C319	1-104-851-11	s	TANTALUM, CHIP 10uF 20% 10V
C320	1-107-686-11	s	TANTALUM, CHIP 4.7uF 20% 16V
C321	1-107-686-11	s	TANTALUM, CHIP 4.7uF 20% 16V
C322	1-162-969-11	s	CERAMIC, CHIP 0.0068uF 10% 25V
C350	1-104-851-11	s	TANTALUM, CHIP 10uF 20% 10V
C351	1-164-156-11	s	CERAMIC, CHIP 0.1uF 25V
C352	1-104-851-11	s	TANTALUM, CHIP 10uF 20% 10V
C353	1-164-156-11	s	CERAMIC, CHIP 0.1uF 25V
C354	1-164-156-11	s	CERAMIC, CHIP 0.1uF 25V
C355	1-164-156-11	s	CERAMIC, CHIP 0.1uF 25V

(TC-80/80A BOARD)

Ref. No. or Q'ty	Part No.	SP	Description
C356	1-104-851-11	s	TANTALUM, CHIP 10uF 20% 10V
C357	1-164-227-11	s	CERAMIC, CHIP 0.022uF 10% 25V
C358	1-164-156-11	s	CERAMIC, CHIP 0.1uF 25V
C359	1-104-851-11	s	TANTALUM, CHIP 10uF 20% 10V
C360	1-104-851-11	s	TANTALUM, CHIP 10uF 20% 10V
C361	1-164-156-11	s	CERAMIC, CHIP 0.1uF 25V
C362	1-162-964-11	s	CERAMIC, CHIP 0.001uF 10% 50V
C363	1-164-156-11	s	CERAMIC, CHIP 0.1uF 25V
C364	1-162-964-11	s	CERAMIC, CHIP 0.001uF 10% 50V
C365	1-162-966-11	s	CERAMIC, CHIP 0.0022uF 10% 50V
C370	1-164-227-11	s	CERAMIC, CHIP 0.022uF 10% 25V
C371	1-164-227-11	s	CERAMIC, CHIP 0.022uF 10% 25V
C372	1-115-581-11	s	TANTALUM, CHIP 100uF 20% 16V
C373	1-162-927-11	s	CERAMIC, CHIP 100PF 5% 50V
C374	1-162-927-11	s	CERAMIC, CHIP 100PF 5% 50V
C390	1-164-227-11	s	CERAMIC, CHIP 0.022uF 10% 25V
C391	1-107-686-11	s	TANTALUM, CHIP 4.7uF 20% 16V
C392	1-104-851-11	s	TANTALUM, CHIP 10uF 20% 10V
C403	1-115-581-11	s	TANTALUM, CHIP 100uF 20% 16V
C404	1-162-921-11	s	CERAMIC, CHIP 33PF 5% 50V
C405	1-104-851-11	s	TANTALUM, CHIP 10uF 20% 10V
C406	1-162-923-11	s	CERAMIC, CHIP 47PF 5% 50V
C407	1-104-851-11	s	TANTALUM, CHIP 10uF 20% 10V
C408	1-107-686-11	s	TANTALUM, CHIP 4.7uF 20% 16V
C409	1-104-851-11	s	TANTALUM, CHIP 10uF 20% 10V
C410	1-110-569-11	s	TANTALUM, CHIP 47uF 20% 6.3V
C411	1-104-851-11	s	TANTALUM, CHIP 10uF 20% 10V
C412	1-104-851-11	s	TANTALUM, CHIP 10uF 20% 10V
C413	1-107-826-11	s	CERAMIC, CHIP 0.1uF 10% 16V
C414	1-104-553-11	s	FILM, CHIP 0.015uF 5% 16V
C415	1-162-923-11	s	CERAMIC, CHIP 47PF 5% 50V
C416	1-162-927-11	s	CERAMIC, CHIP 100PF 5% 50V
C417	1-164-227-11	s	CERAMIC, CHIP 0.022uF 10% 25V
C418	1-164-227-11	s	CERAMIC, CHIP 0.022uF 10% 25V
C419	1-104-851-11	s	TANTALUM, CHIP 10uF 20% 10V
C420	1-107-686-11	s	TANTALUM, CHIP 4.7uF 20% 16V
C421	1-107-686-11	s	TANTALUM, CHIP 4.7uF 20% 16V
C422	1-162-969-11	s	CERAMIC, CHIP 0.0068uF 10% 25V
C470	1-115-581-11	s	TANTALUM, CHIP 100uF 20% 16V
C473	1-162-927-11	s	CERAMIC, CHIP 100PF 5% 50V
C474	1-162-927-11	s	CERAMIC, CHIP 100PF 5% 50V
C502	1-104-851-11	s	TANTALUM, CHIP 10uF 20% 10V
C503	1-164-156-11	s	CERAMIC, CHIP 0.1uF 25V
C504	1-164-156-11	s	CERAMIC, CHIP 0.1uF 25V
C505	1-104-851-11	s	TANTALUM, CHIP 10uF 20% 10V
C506	1-164-156-11	s	CERAMIC, CHIP 0.1uF 25V
C507	1-104-851-11	s	TANTALUM, CHIP 10uF 20% 10V
C510	1-104-851-11	s	TANTALUM, CHIP 10uF 20% 10V
C511	1-104-851-11	s	TANTALUM, CHIP 10uF 20% 10V
C514	1-162-927-11	s	CERAMIC, CHIP 100PF 5% 50V
C517	1-162-927-11	s	CERAMIC, CHIP 100PF 5% 50V
C518	1-162-927-11	s	CERAMIC, CHIP 100PF 5% 50V
C519	1-164-227-11	s	CERAMIC, CHIP 0.022uF 10% 25V
C520	1-164-227-11	s	CERAMIC, CHIP 0.022uF 10% 25V
C521	1-104-539-11	s	FILM, CHIP 0.001uF 5% 50V
C522	1-104-543-11	s	FILM, CHIP 0.0022uF 5% 50V
C523	1-104-851-11	s	TANTALUM, CHIP 10uF 20% 10V
C524	1-162-966-11	s	CERAMIC, CHIP 0.0022uF 10% 50V
C525	1-164-227-11	s	CERAMIC, CHIP 0.022uF 10% 25V

(TC-80/80A BOARD)

Ref. No. or Q'ty	Part No.	SP	Description
C526	1-164-227-11	s	CERAMIC, CHIP 0.022uF 10% 25V
C527	1-164-227-11	s	CERAMIC, CHIP 0.022uF 10% 25V
C528	1-115-581-11	s	TANTALUM, CHIP 100uF 20% 16V
C529	1-162-919-11	s	CERAMIC, CHIP 22PF 5% 50V
C530	1-104-851-11	s	TANTALUM, CHIP 10uF 20% 10V
C531	1-162-923-11	s	CERAMIC, CHIP 47PF 5% 50V
C532	1-104-851-11	s	TANTALUM, CHIP 10uF 20% 10V
C533	1-107-686-11	s	TANTALUM, CHIP 4.7uF 20% 16V
C534	1-104-851-11	s	TANTALUM, CHIP 10uF 20% 10V
C535	1-115-581-11	s	TANTALUM, CHIP 100uF 20% 16V
C536	1-164-227-11	s	CERAMIC, CHIP 0.022uF 10% 25V
C537	1-164-227-11	s	CERAMIC, CHIP 0.022uF 10% 25V
C538	1-164-227-11	s	CERAMIC, CHIP 0.022uF 10% 25V
C539	1-164-227-11	s	CERAMIC, CHIP 0.022uF 10% 25V
C540	1-135-215-21	s	TANTALUM, CHIP 6.8uF 10% 16V
C541	1-164-227-11	s	CERAMIC, CHIP 0.022uF 10% 25V
C542	1-104-913-11	s	TANTALUM, CHIP 10uF 20% 16V
C543	1-104-913-11	s	TANTALUM, CHIP 10uF 20% 16V
C544	1-126-396-11	s	ELECT, CHIP 47uF 20% 16V
C545	1-164-227-11	s	CERAMIC, CHIP 0.022uF 10% 25V
C546	1-164-227-11	s	CERAMIC, CHIP 0.022uF 10% 25V
C547	1-135-177-21	s	TANTALUM, CHIP 1uF 10% 25V
C548	1-113-994-11	s	TANTALUM, CHIP 6.8uF 20% 16V
C549	1-164-156-11	s	CERAMIC, CHIP 0.1uF 25V
C550	1-128-394-11	s	ELECT 220uF 20% 10V
C551	1-135-166-21	s	TANTALUM, CHIP 47uF 10% 10V
C552	1-135-166-21	s	TANTALUM, CHIP 47uF 10% 10V
C553	1-164-227-11	s	CERAMIC, CHIP 0.022uF 10% 25V
C559	1-164-227-11	s	CERAMIC, CHIP 0.022uF 10% 25V
C560	1-164-227-11	s	CERAMIC, CHIP 0.022uF 10% 25V
C561	1-164-677-11	s	CERAMIC, CHIP 0.033uF 10% 16V
C562	1-164-677-11	s	CERAMIC, CHIP 0.033uF 10% 16V
C563	1-164-227-11	s	CERAMIC, CHIP 0.022uF 10% 25V
C564	1-165-176-11	s	CERAMIC 0.047uF 10% 16V
C566	1-115-581-11	s	TANTALUM, CHIP 100uF 20% 16V
C567	1-115-581-11	s	TANTALUM, CHIP 100uF 20% 16V
C569	1-128-391-11	s	ELECT 330uF 20% 6.3V
C570	1-164-227-11	s	CERAMIC, CHIP 0.022uF 10% 25V [For DNV-5]
C571	1-164-227-11	s	CERAMIC, CHIP 0.022uF 10% 25V [For DNV-5]
C610	1-104-851-11	s	TANTALUM, CHIP 10uF 20% 10V
C611	1-104-851-11	s	TANTALUM, CHIP 10uF 20% 10V
C614	1-162-927-11	s	CERAMIC, CHIP 100PF 5% 50V
C617	1-162-927-11	s	CERAMIC, CHIP 100PF 5% 50V
C618	1-162-927-11	s	CERAMIC, CHIP 100PF 5% 50V
C619	1-164-227-11	s	CERAMIC, CHIP 0.022uF 10% 25V
C620	1-164-227-11	s	CERAMIC, CHIP 0.022uF 10% 25V
C621	1-104-539-11	s	FILM, CHIP 0.001uF 5% 50V
C622	1-104-543-11	s	FILM, CHIP 0.0022uF 5% 50V
C623	1-104-851-11	s	TANTALUM, CHIP 10uF 20% 10V
C624	1-162-966-11	s	CERAMIC, CHIP 0.0022uF 10% 50V
C625	1-164-227-11	s	CERAMIC, CHIP 0.022uF 10% 25V
C626	1-164-227-11	s	CERAMIC, CHIP 0.022uF 10% 25V
C627	1-164-227-11	s	CERAMIC, CHIP 0.022uF 10% 25V
C628	1-115-581-11	s	TANTALUM, CHIP 100uF 20% 16V
C629	1-162-919-11	s	CERAMIC, CHIP 22PF 5% 50V
C630	1-104-851-11	s	TANTALUM, CHIP 10uF 20% 10V

(TC-80/80A BOARD)

Ref. No. or Q'ty	Part No.	SP	Description
C631	1-162-923-11	s	CERAMIC, CHIP 47PF 5% 50V
C632	1-104-851-11	s	TANTALUM, CHIP 10uF 20% 10V
C633	1-107-686-11	s	TANTALUM, CHIP 4.7uF 20% 16V
C634	1-104-851-11	s	TANTALUM, CHIP 10uF 20% 10V
C635	1-115-581-11	s	TANTALUM, CHIP 100uF 20% 16V
C636	1-164-227-11	s	CERAMIC, CHIP 0.022uF 10% 25V
C637	1-164-227-11	s	CERAMIC, CHIP 0.022uF 10% 25V
C701	1-162-919-11	s	CERAMIC, CHIP 22PF 5% 50V
C702	1-162-919-11	s	CERAMIC, CHIP 22PF 5% 50V
C703	1-164-156-11	s	CERAMIC, CHIP 0.1uF 25V
C704	1-164-156-11	s	CERAMIC, CHIP 0.1uF 25V
C705	1-115-416-11	s	CERAMIC, CHIP 1000PF 5% 25V
C706	1-135-166-21	s	TANTALUM, CHIP 47uF 10% 10V
C707	1-135-166-21	s	TANTALUM, CHIP 47uF 10% 10V
C708	1-135-215-21	s	TANTALUM, CHIP 6.8uF 10% 16V
C709	1-164-227-11	s	CERAMIC, CHIP 0.022uF 10% 25V
C710	1-135-215-21	s	TANTALUM, CHIP 6.8uF 10% 16V
C711	1-164-156-11	s	CERAMIC, CHIP 0.1uF 25V
C712	1-135-215-21	s	TANTALUM, CHIP 6.8uF 10% 16V
C713	1-164-227-11	s	CERAMIC, CHIP 0.022uF 10% 25V
C714	1-164-227-11	s	CERAMIC, CHIP 0.022uF 10% 25V
C715	1-164-227-11	s	CERAMIC, CHIP 0.022uF 10% 25V
C716	1-162-915-11	s	CERAMIC, CHIP 10PF 50V
C717	1-162-915-11	s	CERAMIC, CHIP 10PF 50V
C718	1-164-227-11	s	CERAMIC, CHIP 0.022uF 10% 25V
C719	1-164-156-11	s	CERAMIC, CHIP 0.1uF 25V
C720	1-162-915-11	s	CERAMIC, CHIP 10PF 50V
C721	1-162-916-11	s	CERAMIC, CHIP 12PF 5% 50V
C722	1-164-227-11	s	CERAMIC, CHIP 0.022uF 10% 25V
C723	1-164-227-11	s	CERAMIC, CHIP 0.022uF 10% 25V
C724	1-162-920-11	s	CERAMIC, CHIP 27PF 5% 50V
C727	1-162-920-11	s	CERAMIC, CHIP 27PF 5% 50V
C728	1-164-227-11	s	CERAMIC, CHIP 0.022uF 10% 25V
C729	1-164-227-11	s	CERAMIC, CHIP 0.022uF 10% 25V
C730	1-135-215-21	s	TANTALUM, CHIP 6.8uF 10% 16V
C731-736	1-164-227-11	s	CERAMIC, CHIP 0.022uF 10% 25V
C739	1-107-826-11	s	CERAMIC, CHIP 0.1uF 10% 16V
C740	1-107-826-11	s	CERAMIC, CHIP 0.1uF 10% 16V
C741	1-164-156-11	s	CERAMIC, CHIP 0.1uF 25V
C742	1-164-156-11	s	CERAMIC, CHIP 0.1uF 25V
C743	1-164-156-11	s	CERAMIC, CHIP 0.1uF 25V
C745	1-113-992-11	s	TANTALUM, CHIP 3.3uF 20% 35V
C801	1-135-177-21	s	TANTALUM, CHIP 1uF 10% 25V
C802	1-126-927-11	s	ELECT 2200uF 20% 10V
C803	1-135-215-21	s	TANTALUM, CHIP 6.8uF 10% 16V
C804	1-135-177-21	s	TANTALUM, CHIP 1uF 10% 25V
C805	1-126-392-11	s	ELECT, CHIP 100uF 20% 6.3V
C806	1-164-227-11	s	CERAMIC, CHIP 0.022uF 10% 25V
C811	1-164-156-11	s	CERAMIC, CHIP 0.1uF 25V
C812	1-135-177-21	s	TANTALUM, CHIP 1uF 10% 25V
C813	1-135-215-21	s	TANTALUM, CHIP 6.8uF 10% 16V
C814	1-135-215-21	s	TANTALUM, CHIP 6.8uF 10% 16V
C815	1-135-177-21	s	TANTALUM, CHIP 1uF 10% 25V
C816	1-164-227-11	s	CERAMIC, CHIP 0.022uF 10% 25V
C817	1-135-177-21	s	TANTALUM, CHIP 1uF 10% 25V
C818	1-164-227-11	s	CERAMIC, CHIP 0.022uF 10% 25V
C819	1-164-227-11	s	CERAMIC, CHIP 0.022uF 10% 25V
C901	1-164-227-11	s	CERAMIC, CHIP 0.022uF 10% 25V
C902	1-164-227-11	s	CERAMIC, CHIP 0.022uF 10% 25V

(TC-80/80A BOARD)

Ref. No. or Q'ty	Part No.	SP	Description
C903	1-164-227-11	s	CERAMIC, CHIP 0.022uF 10% 25V
C904	1-164-227-11	s	CERAMIC, CHIP 0.022uF 10% 25V
C951	1-162-970-11	s	CERAMIC, CHIP 0.01uF 10% 25V
C952	1-162-970-11	s	CERAMIC, CHIP 0.01uF 10% 25V
CN101	1-764-441-21	s	CONNECTOR, FPC 30P
CN102	1-764-441-21	s	CONNECTOR, FPC 30P
CN503	1-580-057-11	s	PIN, CONNECTOR (1.5MM)(SMD) 4P
CN504	1-580-055-21	s	PIN, CONNECTOR (1.5MM)(SMD) 2P
CN704	1-580-789-21	s	PIN, CONNECTOR (1.5MM)(SMD) 6P
CN901	1-764-007-11	s	PIN, CONNECTOR (1.5MM)(SMD) 12P
CN902	1-750-159-21	o	CONNECTOR, FPC 5P [Except DNV-5]
D101	8-719-941-23	s	DIODE DA204U
D102	8-719-941-09	s	DIODE DAP202U
D201	8-719-941-23	s	DIODE DA204U
D202	8-719-941-09	s	DIODE DAP202U
D301	8-719-941-23	s	DIODE DA204U
D302	8-719-941-09	s	DIODE DAP202U
D390	8-719-941-86	s	DIODE DAN202U
D401	8-719-941-23	s	DIODE DA204U
D402	8-719-941-09	s	DIODE DAP202U
D501	8-719-941-23	s	DIODE DA204U
D502	8-719-941-23	s	DIODE DA204U
D503	8-719-029-63	s	DIODE RD4.3UH-T1
D504	8-719-029-63	s	DIODE RD4.3UH-T1
D505	8-719-974-51	s	DIODE SB20-03P
D506	8-719-941-23	s	DIODE DA204U
D507	8-719-941-86	s	DIODE DAN202U
D508	8-719-941-86	s	DIODE DAN202U
D510	8-719-157-36	s	DIODE RD6.8M-B
D612	8-719-021-31	s	DIODE UZM5.1B
D701	8-719-941-23	s	DIODE DA204U
D702	8-719-941-23	s	DIODE DA204U
D703	8-719-105-28	s	DIODE RD2.4M-B
D704	8-719-105-28	s	DIODE RD2.4M-B
D705	8-719-938-72	s	DIODE SB01-05CP
D706	8-719-941-86	s	DIODE DAN202U
D707	8-719-941-86	s	DIODE DAN202U
D708	8-719-941-86	s	DIODE DAN202U
D709	8-719-989-22	s	LED CL-150R-CD, RED
D710	8-719-989-22	s	LED CL-150R-CD, RED
D711	8-719-989-22	s	LED CL-150R-CD, RED
D712	8-719-032-78	s	LED GL3UR8, RED
D713	8-719-941-86	s	DIODE DAN202U
D714	8-719-941-23	s	DIODE DA204U
D801-806	8-719-941-86	s	DIODE DAN202U
D807	8-719-938-72	s	DIODE SB01-05CP
D810	8-719-941-86	s	DIODE DAN202U
D811	8-719-938-72	s	DIODE SB01-05CP
D813	8-719-938-72	s	DIODE SB01-05CP
D814	8-719-938-72	s	DIODE SB01-05CP
E801	1-535-877-22	o	CHIP, CHECKER
IC101	8-759-700-84	s	IC NJM2041M-D
IC102	8-759-700-84	s	IC NJM2041M-D
IC103	8-759-633-55	s	IC M5222FP
IC104	8-759-603-27	s	IC M5201FP
IC105	8-759-700-84	s	IC NJM2041M-D
IC106	8-759-359-66	s	IC TL082CPW-E05

(TC-80/80A BOARD)

Ref. No. or Q'ty	Part No.	SP	Description
IC107	8-759-700-84	s	IC NJM2041M-D
IC108	8-759-331-35	s	IC AK5340-VS
IC109	8-759-051-48	s	IC SN74HCT541APW-E05
IC110	8-759-196-93	s	IC TC7SH00FU-TE85R
IC111	8-759-079-61	s	IC TC74VHC74FS(EL)
IC201	8-759-700-84	s	IC NJM2041M-D
IC202	8-759-700-84	s	IC NJM2041M-D
IC203	8-759-633-55	s	IC M5222FP
IC204	8-759-603-27	s	IC M5201FP
IC205	8-759-700-84	s	IC NJM2041M-D
IC206	8-759-359-66	s	IC TL082CPW-E05
IC207	8-759-700-84	s	IC NJM2041M-D
IC301	8-759-700-84	s	IC NJM2041M-D
IC302	8-759-700-84	s	IC NJM2041M-D
IC303	8-759-359-66	s	IC TL082CPW-E05
IC304	8-759-700-84	s	IC NJM2041M-D
IC305	8-759-331-35	s	IC AK5340-VS
IC306	8-759-196-93	s	IC TC7SH00FU-TE85R
IC307	8-759-196-97	s	IC TC7SH32FU-TE85R
IC308	8-729-025-54	s	TRANSISTOR SI9958DY
IC402	8-759-700-84	s	IC NJM2041M-D
IC403	8-759-359-66	s	IC TL082CPW-E05
IC404	8-759-700-84	s	IC NJM2041M-D
IC470	8-759-700-84	s	IC NJM2041M-D
IC503	8-759-271-86	s	IC TC7SH04FU
IC504	8-759-344-16	s	IC AK4319-VM-E2
IC505	8-759-271-86	s	IC TC7SH04FU
IC506	8-759-700-84	s	IC NJM2041M-D
IC507	8-759-700-84	s	IC NJM2041M-D
IC508	8-759-262-06	s	IC TC4052BFS(ELQ)
IC509	8-759-700-84	s	IC NJM2041M-D
IC510	8-759-359-66	s	IC TL082CPW-E05
IC511	8-759-700-84	s	IC NJM2041M-D
IC512	8-759-271-84	s	IC TC7SH02FU
IC519	8-759-700-78	s	IC NJM082M
IC520	8-759-710-88	s	IC NJM431U
IC521	8-759-262-06	s	IC TC4052BFS(ELQ)
IC522	8-759-700-50	s	IC NJM386M
IC523	8-759-700-84	s	IC NJM2041M-D [For DNV-5]
IC524	8-759-710-88	s	IC NJM431U
IC606	8-759-700-84	s	IC NJM2041M-D
IC607	8-759-700-84	s	IC NJM2041M-D
IC609	8-759-700-84	s	IC NJM2041M-D
IC610	8-759-359-66	s	IC TL082CPW-E05
IC611	8-759-700-84	s	IC NJM2041M-D
IC701	8-759-079-49	s	IC TC74VHC04FS(EL)
IC702	8-759-050-50	s	IC SN74HCT04APW-E05
IC703	8-759-079-49	s	IC TC74VHC04FS(EL)
IC704	8-759-173-16	s	IC TL062CPW
IC705	8-759-710-28	s	IC NJM4565M-A
IC706	8-759-431-95	s	IC S-81230SGUP-DQB-T1
IC708	8-759-175-77	s	IC CXD8384Q
IC710	8-759-071-01	s	IC UPD4991AGS
IC711	8-759-431-98	s	IC BR9020
IC712	8-759-050-50	s	IC SN74HCT04APW-E05
IC713	8-759-050-50	s	IC SN74HCT04APW-E05
IC714	8-759-996-51	s	IC CXD8125Q
IC715	8-759-081-96	s	IC UPD6456GS-620
IC716	8-759-234-77	s	IC TC4S66F

(TC-80/80A BOARD)

Ref. No. or Q'ty	Part No.	SP	Description
IC717	8-759-343-88	s	IC DS1302Z
IC801	8-759-431-94	s	IC S-81240SGUP-DQJ-T1
IC802	8-759-431-95	s	IC S-81230SGUP-DQB-T1
IC803	8-759-431-93	s	IC RH5VL33AA-T1
IC804	8-759-349-55	s	IC RH5VL25AA-T1
IC805	8-759-431-95	s	IC S-81230SGUP-DQB-T1
IC806	8-759-337-40	s	IC NJM2904V(TE2)
IC807	8-759-337-40	s	IC NJM2904V(TE2)
IC820	8-759-337-40	s	IC NJM2904V(TE2)
IC901	8-759-175-04	s	IC PCF8574T-T
IC902	8-759-175-04	s	IC PCF8574T-T
IC951	8-759-939-41	s	IC S-81230AG-RB
IC952	8-759-359-66	s	IC TL082CPW-E05
L101	1-412-170-11	s	INDUCTOR 0.47uH
L502	1-412-170-11	s	INDUCTOR 0.47uH
L503	1-412-170-11	s	INDUCTOR 0.47uH
L504	1-412-170-11	s	INDUCTOR 0.47uH
L505	1-412-170-11	s	INDUCTOR 0.47uH
L506	1-408-798-00	s	INDUCTOR, CHIP 1mmH
L701	1-410-389-31	s	INDUCTOR CHIP 47UH
LCD701	1-810-586-11	s	LCD MODULE
Q101	8-729-014-86	s	TRANSISTOR 2SC4207-YGRTE85L
Q102	8-729-140-63	s	TRANSISTOR 2SA1611-M5M6
Q103-107	8-729-230-63	s	TRANSISTOR 2SC4116YG
Q108	8-729-140-63	s	TRANSISTOR 2SA1611-M5M6
Q109	8-729-012-35	s	TRANSISTOR 2SK711-BL
Q201	8-729-014-86	s	TRANSISTOR 2SC4207-YGRTE85L
Q202	8-729-140-63	s	TRANSISTOR 2SA1611-M5M6
Q203-207	8-729-230-63	s	TRANSISTOR 2SC4116YG
Q209	8-729-012-35	s	TRANSISTOR 2SK711-BL
Q301	8-729-014-86	s	TRANSISTOR 2SC4207-YGRTE85L
Q302	8-729-230-63	s	TRANSISTOR 2SC4116YG
Q303	8-729-230-63	s	TRANSISTOR 2SC4116YG
Q304	8-729-230-63	s	TRANSISTOR 2SC4116YG
Q305	8-729-140-63	s	TRANSISTOR 2SA1611-M5M6
Q306	8-729-012-35	s	TRANSISTOR 2SK711-BL
Q307	8-729-029-14	s	TRANSISTOR DTC144EUA-T106
Q308	8-729-028-91	s	TRANSISTOR DTA144EUA-T106
Q309	8-729-029-14	s	TRANSISTOR DTC144EUA-T106
Q401	8-729-014-86	s	TRANSISTOR 2SC4207-YGRTE85L
Q402	8-729-230-63	s	TRANSISTOR 2SC4116YG
Q403	8-729-230-63	s	TRANSISTOR 2SC4116YG
Q404	8-729-230-63	s	TRANSISTOR 2SC4116YG
Q406	8-729-012-35	s	TRANSISTOR 2SK711-BL
Q501	8-729-140-63	s	TRANSISTOR 2SA1611-M5M6
Q502	8-729-014-86	s	TRANSISTOR 2SC4207-YGRTE85L
Q503	8-729-230-63	s	TRANSISTOR 2SC4116YG
Q504	8-729-230-63	s	TRANSISTOR 2SC4116YG
Q505	8-729-230-63	s	TRANSISTOR 2SC4116YG
Q507	8-729-020-94	s	TRANSISTOR 2SA1314C-TE12L
Q508	8-729-808-42	s	TRANSISTOR 2SD1624-T
Q511	8-729-808-42	s	TRANSISTOR 2SD1624-T
Q512	8-729-028-91	s	TRANSISTOR DTA144EUA-T106
Q513	8-729-209-07	s	TRANSISTOR 2SC4213-B
Q514	8-729-140-63	s	TRANSISTOR 2SA1611-M5M6
Q602	8-729-014-86	s	TRANSISTOR 2SC4207-YGRTE85L
Q603	8-729-230-63	s	TRANSISTOR 2SC4116YG

(TC-80/80A BOARD)

Ref. No. or Q'ty	Part No.	SP	Description
Q604	8-729-230-63	s	TRANSISTOR 2SC4116YG
Q605	8-729-230-63	s	TRANSISTOR 2SC4116YG
Q791	8-729-030-02	s	TRANSISTOR DTC144ESA [For DNV-5]
Q801	8-729-209-07	s	TRANSISTOR 2SC4213-B
Q951	8-729-230-63	s	TRANSISTOR 2SC4116YG
Q952	8-729-230-63	s	TRANSISTOR 2SC4116YG
R101	1-218-700-11	s	METAL, CHIP 2.2K 0.50% 1/16W
R102	1-218-700-11	s	METAL, CHIP 2.2K 0.50% 1/16W
R103	1-218-700-11	s	METAL, CHIP 2.2K 0.50% 1/16W
R104	1-218-700-11	s	METAL, CHIP 2.2K 0.50% 1/16W
R105	1-218-706-11	s	METAL, CHIP 3.9K 0.50% 1/16W
R106	1-218-696-11	s	METAL, CHIP 1.5K 0.50% 1/16W
R107	1-218-704-11	s	METAL, CHIP 3.3K 0.50% 1/16W
R108	1-218-696-11	s	METAL, CHIP 1.5K 0.50% 1/16W
R109	1-218-700-11	s	METAL, CHIP 2.2K 0.50% 1/16W
R110	1-218-700-11	s	METAL, CHIP 2.2K 0.50% 1/16W
R111	1-218-716-11	s	METAL, CHIP 10K 0.50% 1/16W
R112	1-218-716-11	s	METAL, CHIP 10K 0.50% 1/16W
R113	1-218-660-11	s	METAL, CHIP 47 0.50% 1/16W
R114	1-218-702-11	s	METAL, CHIP 2.7K 0.50% 1/16W
R115	1-218-702-11	s	METAL, CHIP 2.7K 0.50% 1/16W
R116	1-218-692-11	s	METAL, CHIP 1K 0.50% 1/16W
R117	1-218-692-11	s	METAL, CHIP 1K 0.50% 1/16W
R118	1-218-732-11	s	METAL, CHIP 47K 0.50% 1/16W
R119	1-218-732-11	s	METAL, CHIP 47K 0.50% 1/16W
R120	1-218-724-11	s	METAL, CHIP 22K 0.50% 1/16W
R121	1-218-740-11	s	METAL, CHIP 100K 0.50% 1/16W
R122	1-218-716-11	s	METAL, CHIP 10K 0.50% 1/16W
R123	1-218-697-11	s	METAL, CHIP 1.6K 0.50% 1/16W
R124	1-218-727-11	s	METAL, CHIP 30K 0.50% 1/16W
R125	1-218-688-11	s	METAL, CHIP 680 0.50% 1/16W
R126	1-218-734-11	s	METAL, CHIP 56K 0.50% 1/16W
R127	1-218-684-11	s	METAL, CHIP 470 0.50% 1/16W
R128	1-218-708-11	s	METAL, CHIP 4.7K 0.50% 1/16W
R129	1-218-652-11	s	METAL, CHIP 22 0.50% 1/16W
R130	1-218-701-11	s	METAL, CHIP 2.4K 0.50% 1/16W
R132	1-218-692-11	s	METAL, CHIP 1K 0.50% 1/16W
R133	1-218-684-11	s	METAL, CHIP 470 0.50% 1/16W
R134	1-218-722-11	s	METAL, CHIP 18K 0.50% 1/16W
R135	1-218-679-91	s	METAL, CHIP 300 0.50% 1/16W
R136	1-218-697-11	s	METAL, CHIP 1.6K 0.50% 1/16W
R137	1-218-732-11	s	METAL, CHIP 47K 0.50% 1/16W
R138	1-218-716-11	s	METAL, CHIP 10K 0.50% 1/16W
R139	1-218-716-11	s	METAL, CHIP 10K 0.50% 1/16W
R140	1-218-723-11	s	METAL, CHIP 20K 0.50% 1/16W
R141	1-218-708-11	s	METAL, CHIP 4.7K 0.50% 1/16W
R142	1-218-700-11	s	METAL, CHIP 2.2K 0.50% 1/16W
R143	1-218-723-11	s	METAL, CHIP 20K 0.50% 1/16W
R144	1-218-702-11	s	METAL, CHIP 2.7K 0.50% 1/16W
R145	1-218-716-11	s	METAL, CHIP 10K 0.50% 1/16W
R146	1-218-716-11	s	METAL, CHIP 10K 0.50% 1/16W
R147	1-218-716-11	s	METAL, CHIP 10K 0.50% 1/16W
R148	1-218-748-11	s	METAL, CHIP 220K 0.50% 1/16W
R149	1-218-684-11	s	METAL, CHIP 470 0.50% 1/16W
R150	1-218-708-11	s	METAL, CHIP 4.7K 0.50% 1/16W
R151	1-218-716-11	s	METAL, CHIP 10K 0.50% 1/16W
R152	1-218-668-11	s	METAL, CHIP 100 0.50% 1/16W

(TC-80/80A BOARD)

Ref. No. or Q'ty	Part No.	SP	Description
R153	1-218-724-11	s	METAL, CHIP 22K 0.50% 1/16W
R154	1-218-716-11	s	METAL, CHIP 10K 0.50% 1/16W
R155	1-218-720-11	s	METAL, CHIP 15K 0.50% 1/16W
R156	1-218-724-11	s	METAL, CHIP 22K 0.50% 1/16W
R157	1-218-716-11	s	METAL, CHIP 10K 0.50% 1/16W
R158	1-218-692-11	s	METAL, CHIP 1K 0.50% 1/16W
R159	1-216-857-11	s	METAL, CHIP 1M 5% 1/16W
R160	1-218-704-11	s	METAL, CHIP 3.3K 0.50% 1/16W
R161	1-218-734-11	s	METAL, CHIP 56K 0.50% 1/16W
R162	1-218-734-11	s	METAL, CHIP 56K 0.50% 1/16W
R163	1-218-740-11	s	METAL, CHIP 100K 0.50% 1/16W
R164	1-218-704-11	s	METAL, CHIP 3.3K 0.50% 1/16W
R165	1-218-712-11	s	METAL, CHIP 6.8K 0.50% 1/16W
R166	1-218-732-11	s	METAL, CHIP 47K 0.50% 1/16W
R167	1-218-724-11	s	METAL, CHIP 22K 0.50% 1/16W
R168	1-218-732-11	s	METAL, CHIP 47K 0.50% 1/16W
R169	1-218-732-11	s	METAL, CHIP 47K 0.50% 1/16W
R170	1-218-666-11	s	METAL, CHIP 82 0.50% 1/16W
R171	1-218-666-11	s	METAL, CHIP 82 0.50% 1/16W
R172	1-216-864-11	s	METAL, CHIP 0 5% 1/16W
R174	1-218-652-11	s	METAL, CHIP 22 0.50% 1/16W
R175	1-218-740-11	s	METAL, CHIP 100K 0.50% 1/16W
R176	1-218-740-11	s	METAL, CHIP 100K 0.50% 1/16W
R177	1-216-864-11	s	METAL, CHIP 0 5% 1/16W
R178	1-218-740-11	s	METAL, CHIP 100K 0.50% 1/16W
R179	1-218-740-11	s	METAL, CHIP 100K 0.50% 1/16W
R180	1-216-864-11	s	METAL, CHIP 0 5% 1/16W
R181	1-218-716-11	s	METAL, CHIP 10K 0.50% 1/16W
R182	1-218-699-11	s	METAL, CHIP 2K 0.50% 1/16W
R183	1-218-709-11	s	METAL, CHIP 5.1K 0.50% 1/16W
R185	1-216-864-11	s	METAL, CHIP 0 5% 1/16W
R186	1-218-716-11	s	METAL, CHIP 10K 0.50% 1/16W
R201	1-218-700-11	s	METAL, CHIP 2.2K 0.50% 1/16W
R202	1-218-700-11	s	METAL, CHIP 2.2K 0.50% 1/16W
R203	1-218-700-11	s	METAL, CHIP 2.2K 0.50% 1/16W
R204	1-218-700-11	s	METAL, CHIP 2.2K 0.50% 1/16W
R205	1-218-706-11	s	METAL, CHIP 3.9K 0.50% 1/16W
R206	1-218-696-11	s	METAL, CHIP 1.5K 0.50% 1/16W
R207	1-218-704-11	s	METAL, CHIP 3.3K 0.50% 1/16W
R208	1-218-696-11	s	METAL, CHIP 1.5K 0.50% 1/16W
R209	1-218-700-11	s	METAL, CHIP 2.2K 0.50% 1/16W
R210	1-218-700-11	s	METAL, CHIP 2.2K 0.50% 1/16W
R211	1-218-716-11	s	METAL, CHIP 10K 0.50% 1/16W
R212	1-218-716-11	s	METAL, CHIP 10K 0.50% 1/16W
R213	1-218-660-11	s	METAL, CHIP 47 0.50% 1/16W
R214	1-218-702-11	s	METAL, CHIP 2.7K 0.50% 1/16W
R215	1-218-702-11	s	METAL, CHIP 2.7K 0.50% 1/16W
R216	1-218-692-11	s	METAL, CHIP 1K 0.50% 1/16W
R217	1-218-692-11	s	METAL, CHIP 1K 0.50% 1/16W
R218	1-218-732-11	s	METAL, CHIP 47K 0.50% 1/16W
R219	1-218-732-11	s	METAL, CHIP 47K 0.50% 1/16W
R220	1-218-724-11	s	METAL, CHIP 22K 0.50% 1/16W
R221	1-218-740-11	s	METAL, CHIP 100K 0.50% 1/16W
R222	1-218-716-11	s	METAL, CHIP 10K 0.50% 1/16W
R223	1-218-697-11	s	METAL, CHIP 1.6K 0.50% 1/16W
R224	1-218-727-11	s	METAL, CHIP 30K 0.50% 1/16W
R225	1-218-688-11	s	METAL, CHIP 680 0.50% 1/16W
R226	1-218-734-11	s	METAL, CHIP 56K 0.50% 1/16W
R227	1-218-708-11	s	METAL, CHIP 4.7K 0.50% 1/16W

(TC-80/80A BOARD)

Ref. No. or Q'ty	Part No.	SP	Description
R228	1-218-684-11	s	METAL, CHIP 470 0.50% 1/16W
R229	1-218-652-11	s	METAL, CHIP 22 0.50% 1/16W
R230	1-218-701-11	s	METAL, CHIP 2.4K 0.50% 1/16W
R232	1-218-692-11	s	METAL, CHIP 1K 0.50% 1/16W
R233	1-218-684-11	s	METAL, CHIP 470 0.50% 1/16W
R234	1-218-722-11	s	METAL, CHIP 18K 0.50% 1/16W
R235	1-218-697-11	s	METAL, CHIP 1.6K 0.50% 1/16W
R236	1-218-679-91	s	METAL, CHIP 300 0.50% 1/16W
R237	1-218-732-11	s	METAL, CHIP 47K 0.50% 1/16W
R238	1-218-716-11	s	METAL, CHIP 10K 0.50% 1/16W
R239	1-218-716-11	s	METAL, CHIP 10K 0.50% 1/16W
R240	1-218-723-11	s	METAL, CHIP 20K 0.50% 1/16W
R241	1-218-708-11	s	METAL, CHIP 4.7K 0.50% 1/16W
R242	1-218-700-11	s	METAL, CHIP 2.2K 0.50% 1/16W
R243	1-218-723-11	s	METAL, CHIP 20K 0.50% 1/16W
R244	1-218-702-11	s	METAL, CHIP 2.7K 0.50% 1/16W
R245	1-218-716-11	s	METAL, CHIP 10K 0.50% 1/16W
R246	1-218-716-11	s	METAL, CHIP 10K 0.50% 1/16W
R247	1-218-716-11	s	METAL, CHIP 10K 0.50% 1/16W
R248	1-218-748-11	s	METAL, CHIP 220K 0.50% 1/16W
R249	1-218-684-11	s	METAL, CHIP 470 0.50% 1/16W
R250	1-218-708-11	s	METAL, CHIP 4.7K 0.50% 1/16W
R251	1-218-716-11	s	METAL, CHIP 10K 0.50% 1/16W
R252	1-218-668-11	s	METAL, CHIP 100 0.50% 1/16W
R253	1-218-724-11	s	METAL, CHIP 22K 0.50% 1/16W
R257	1-218-716-11	s	METAL, CHIP 10K 0.50% 1/16W
R258	1-218-692-11	s	METAL, CHIP 1K 0.50% 1/16W
R259	1-216-857-11	s	METAL, CHIP 1M 5% 1/16W
R260	1-218-704-11	s	METAL, CHIP 3.3K 0.50% 1/16W
R261	1-218-734-11	s	METAL, CHIP 56K 0.50% 1/16W
R262	1-218-734-11	s	METAL, CHIP 56K 0.50% 1/16W
R263	1-218-740-11	s	METAL, CHIP 100K 0.50% 1/16W
R264	1-218-704-11	s	METAL, CHIP 3.3K 0.50% 1/16W
R265	1-218-712-11	s	METAL, CHIP 6.8K 0.50% 1/16W
R266	1-218-732-11	s	METAL, CHIP 47K 0.50% 1/16W
R267	1-218-724-11	s	METAL, CHIP 22K 0.50% 1/16W
R268	1-218-732-11	s	METAL, CHIP 47K 0.50% 1/16W
R269	1-218-732-11	s	METAL, CHIP 47K 0.50% 1/16W
R270	1-218-666-11	s	METAL, CHIP 82 0.50% 1/16W
R271	1-218-666-11	s	METAL, CHIP 82 0.50% 1/16W
R281	1-218-716-11	s	METAL, CHIP 10K 0.50% 1/16W
R282	1-218-699-11	s	METAL, CHIP 2K 0.50% 1/16W
R283	1-218-709-11	s	METAL, CHIP 5.1K 0.50% 1/16W
R285	1-216-864-11	s	METAL, CHIP 0 5% 1/16W
R286	1-218-716-11	s	METAL, CHIP 10K 0.50% 1/16W
R301	1-218-700-11	s	METAL, CHIP 2.2K 0.50% 1/16W
R302	1-218-708-11	s	METAL, CHIP 4.7K 0.50% 1/16W
R303	1-218-716-11	s	METAL, CHIP 10K 0.50% 1/16W
R304	1-218-652-11	s	METAL, CHIP 22 0.50% 1/16W
R305	1-218-684-11	s	METAL, CHIP 470 0.50% 1/16W
R306	1-218-722-11	s	METAL, CHIP 18K 0.50% 1/16W
R307	1-218-732-11	s	METAL, CHIP 47K 0.50% 1/16W
R308	1-218-716-11	s	METAL, CHIP 10K 0.50% 1/16W
R309	1-218-716-11	s	METAL, CHIP 10K 0.50% 1/16W
R310	1-218-723-11	s	METAL, CHIP 20K 0.50% 1/16W
R311	1-218-708-11	s	METAL, CHIP 4.7K 0.50% 1/16W
R312	1-218-723-11	s	METAL, CHIP 20K 0.50% 1/16W
R313	1-218-716-11	s	METAL, CHIP 10K 0.50% 1/16W
R314	1-218-716-11	s	METAL, CHIP 10K 0.50% 1/16W

(TC-80/80A BOARD)

Ref. No. or Q'ty	Part No.	SP	Description
R315	1-218-748-11	s	METAL, CHIP 220K 0.50% 1/16W
R316	1-218-684-11	s	METAL, CHIP 470 0.50% 1/16W
R317	1-218-708-11	s	METAL, CHIP 4.7K 0.50% 1/16W
R318	1-218-668-11	s	METAL, CHIP 100 0.50% 1/16W
R319	1-218-697-11	s	METAL, CHIP 1.6K 0.50% 1/16W
R320	1-218-679-91	s	METAL, CHIP 300 0.50% 1/16W
R321	1-218-724-11	s	METAL, CHIP 22K 0.50% 1/16W
R322	1-218-716-11	s	METAL, CHIP 10K 0.50% 1/16W
R323	1-218-720-11	s	METAL, CHIP 15K 0.50% 1/16W
R324	1-218-724-11	s	METAL, CHIP 22K 0.50% 1/16W
R325	1-218-716-11	s	METAL, CHIP 10K 0.50% 1/16W
R326	1-218-692-11	s	METAL, CHIP 1K 0.50% 1/16W
R327	1-216-857-11	s	METAL, CHIP 1M 5% 1/16W
R328	1-218-704-11	s	METAL, CHIP 3.3K 0.50% 1/16W
R329	1-218-734-11	s	METAL, CHIP 56K 0.50% 1/16W
R330	1-218-734-11	s	METAL, CHIP 56K 0.50% 1/16W
R331	1-218-704-11	s	METAL, CHIP 3.3K 0.50% 1/16W
R332	1-218-712-11	s	METAL, CHIP 6.8K 0.50% 1/16W
R333	1-218-732-11	s	METAL, CHIP 47K 0.50% 1/16W
R334	1-218-724-11	s	METAL, CHIP 22K 0.50% 1/16W
R335	1-218-732-11	s	METAL, CHIP 47K 0.50% 1/16W
R336	1-218-732-11	s	METAL, CHIP 47K 0.50% 1/16W
R337	1-218-666-11	s	METAL, CHIP 82 0.50% 1/16W
R338	1-218-666-11	s	METAL, CHIP 82 0.50% 1/16W
R339	1-218-709-11	s	METAL, CHIP 5.1K 0.50% 1/16W
R340	1-218-699-11	s	METAL, CHIP 2K 0.50% 1/16W
R341	1-218-740-11	s	METAL, CHIP 100K 0.50% 1/16W
R350	1-216-864-11	s	METAL, CHIP 0 5% 1/16W
R352	1-218-652-11	s	METAL, CHIP 22 0.50% 1/16W
R353	1-218-740-11	s	METAL, CHIP 100K 0.50% 1/16W
R354	1-218-740-11	s	METAL, CHIP 100K 0.50% 1/16W
R355	1-216-864-11	s	METAL, CHIP 0 5% 1/16W
R356	1-218-740-11	s	METAL, CHIP 100K 0.50% 1/16W
R357	1-218-716-11	s	METAL, CHIP 10K 0.50% 1/16W
R358	1-218-716-11	s	METAL, CHIP 10K 0.50% 1/16W
R359	1-218-740-11	s	METAL, CHIP 100K 0.50% 1/16W
R360	1-216-864-11	s	METAL, CHIP 0 5% 1/16W
R370	1-218-700-11	s	METAL, CHIP 2.2K 0.50% 1/16W
R371	1-218-700-11	s	METAL, CHIP 2.2K 0.50% 1/16W
R372	1-218-700-11	s	METAL, CHIP 2.2K 0.50% 1/16W
R373	1-218-700-11	s	METAL, CHIP 2.2K 0.50% 1/16W
R374	1-218-706-11	s	METAL, CHIP 3.9K 0.50% 1/16W
R375	1-218-696-11	s	METAL, CHIP 1.5K 0.50% 1/16W
R390	1-218-726-11	s	METAL, CHIP 27K 0.50% 1/16W
R391	1-218-722-11	s	METAL, CHIP 18K 0.50% 1/16W
R392	1-218-728-11	s	METAL, CHIP 33K 0.50% 1/16W
R393	1-218-726-11	s	METAL, CHIP 27K 0.50% 1/16W
R401	1-218-700-11	s	METAL, CHIP 2.2K 0.50% 1/16W
R402	1-218-708-11	s	METAL, CHIP 4.7K 0.50% 1/16W
R403	1-218-716-11	s	METAL, CHIP 10K 0.50% 1/16W
R404	1-218-652-11	s	METAL, CHIP 22 0.50% 1/16W
R405	1-218-722-11	s	METAL, CHIP 18K 0.50% 1/16W
R406	1-218-684-11	s	METAL, CHIP 470 0.50% 1/16W
R407	1-218-732-11	s	METAL, CHIP 47K 0.50% 1/16W
R408	1-218-716-11	s	METAL, CHIP 10K 0.50% 1/16W
R409	1-218-716-11	s	METAL, CHIP 10K 0.50% 1/16W
R410	1-218-723-11	s	METAL, CHIP 20K 0.50% 1/16W
R411	1-218-708-11	s	METAL, CHIP 4.7K 0.50% 1/16W
R412	1-218-723-11	s	METAL, CHIP 20K 0.50% 1/16W

(TC-80/80A BOARD)

Ref. No. or Q'ty	Part No.	SP	Description
R413	1-218-716-11	s	METAL, CHIP 10K 0.50% 1/16W
R414	1-218-716-11	s	METAL, CHIP 10K 0.50% 1/16W
R415	1-218-748-11	s	METAL, CHIP 220K 0.50% 1/16W
R416	1-218-684-11	s	METAL, CHIP 470 0.50% 1/16W
R417	1-218-708-11	s	METAL, CHIP 4.7K 0.50% 1/16W
R418	1-218-668-11	s	METAL, CHIP 100 0.50% 1/16W
R419	1-218-697-11	s	METAL, CHIP 1.6K 0.50% 1/16W
R420	1-218-679-91	s	METAL, CHIP 300 0.50% 1/16W
R421	1-218-724-11	s	METAL, CHIP 22K 0.50% 1/16W
R425	1-218-716-11	s	METAL, CHIP 10K 0.50% 1/16W
R426	1-218-692-11	s	METAL, CHIP 1K 0.50% 1/16W
R427	1-216-857-11	s	METAL, CHIP 1M 5% 1/16W
R428	1-218-704-11	s	METAL, CHIP 3.3K 0.50% 1/16W
R429	1-218-734-11	s	METAL, CHIP 56K 0.50% 1/16W
R430	1-218-734-11	s	METAL, CHIP 56K 0.50% 1/16W
R431	1-218-704-11	s	METAL, CHIP 3.3K 0.50% 1/16W
R432	1-218-712-11	s	METAL, CHIP 6.8K 0.50% 1/16W
R433	1-218-732-11	s	METAL, CHIP 47K 0.50% 1/16W
R434	1-218-724-11	s	METAL, CHIP 22K 0.50% 1/16W
R435	1-218-732-11	s	METAL, CHIP 47K 0.50% 1/16W
R436	1-218-732-11	s	METAL, CHIP 47K 0.50% 1/16W
R437	1-218-666-11	s	METAL, CHIP 82 0.50% 1/16W
R438	1-218-666-11	s	METAL, CHIP 82 0.50% 1/16W
R439	1-218-709-11	s	METAL, CHIP 5.1K 0.50% 1/16W
R440	1-218-699-11	s	METAL, CHIP 2K 0.50% 1/16W
R441	1-218-740-11	s	METAL, CHIP 100K 0.50% 1/16W
R470	1-218-700-11	s	METAL, CHIP 2.2K 0.50% 1/16W
R471	1-218-700-11	s	METAL, CHIP 2.2K 0.50% 1/16W
R472	1-218-700-11	s	METAL, CHIP 2.2K 0.50% 1/16W
R473	1-218-700-11	s	METAL, CHIP 2.2K 0.50% 1/16W
R474	1-218-706-11	s	METAL, CHIP 3.9K 0.50% 1/16W
R475	1-218-696-11	s	METAL, CHIP 1.5K 0.50% 1/16W
R501	1-216-864-11	s	METAL, CHIP 0 5% 1/16W
R504	1-218-740-11	s	METAL, CHIP 100K 0.50% 1/16W
R506	1-218-740-11	s	METAL, CHIP 100K 0.50% 1/16W
R507	1-218-740-11	s	METAL, CHIP 100K 0.50% 1/16W
R508	1-218-740-11	s	METAL, CHIP 100K 0.50% 1/16W
R509	1-218-740-11	s	METAL, CHIP 100K 0.50% 1/16W
R510	1-218-652-11	s	METAL, CHIP 22 0.50% 1/16W
R512	1-218-716-11	s	METAL, CHIP 10K 0.50% 1/16W
R513	1-218-644-11	s	METAL, CHIP 10 0.50% 1/16W
R514	1-218-704-11	s	METAL, CHIP 3.3K 0.50% 1/16W
R515	1-216-864-11	s	METAL, CHIP 0 5% 1/16W
R516	1-216-864-11	s	METAL, CHIP 0 5% 1/16W
R517	1-218-716-11	s	METAL, CHIP 10K 0.50% 1/16W
R518	1-218-716-11	s	METAL, CHIP 10K 0.50% 1/16W
R519	1-218-707-11	s	METAL, CHIP 4.3K 0.50% 1/16W
R520	1-218-707-11	s	METAL, CHIP 4.3K 0.50% 1/16W
R521	1-218-696-11	s	METAL, CHIP 1.5K 0.50% 1/16W
R522	1-218-696-11	s	METAL, CHIP 1.5K 0.50% 1/16W
R523	1-216-864-11	s	METAL, CHIP 0 5% 1/16W
R524	1-218-676-11	s	METAL, CHIP 220 0.50% 1/16W
R525	1-218-726-11	s	METAL, CHIP 27K 0.50% 1/16W
R526	1-218-700-11	s	METAL, CHIP 2.2K 0.50% 1/16W
R527	1-218-692-11	s	METAL, CHIP 1K 0.50% 1/16W
R528	1-218-713-11	s	METAL, CHIP 7.5K 0.50% 1/16W
R529	1-218-713-11	s	METAL, CHIP 7.5K 0.50% 1/16W
R530	1-216-864-11	s	METAL, CHIP 0 5% 1/16W
R531	1-218-704-11	s	METAL, CHIP 3.3K 0.50% 1/16W

(TC-80/80A BOARD)

Ref. No. or Q'ty	Part No.	SP	Description
R532	1-218-704-11	s	METAL, CHIP 3.3K 0.50% 1/16W
R533	1-218-694-11	s	METAL, CHIP 1.2K 0.50% 1/16W
R534	1-218-726-11	s	METAL, CHIP 27K 0.50% 1/16W
R535	1-218-674-11	s	METAL, CHIP 180 0.50% 1/16W
R536	1-218-702-11	s	METAL, CHIP 2.7K 0.50% 1/16W
R537	1-218-716-11	s	METAL, CHIP 10K 0.50% 1/16W
R538	1-218-700-11	s	METAL, CHIP 2.2K 0.50% 1/16W
R539	1-218-644-11	s	METAL, CHIP 10 0.50% 1/16W
R540	1-218-683-11	s	METAL, CHIP 430 0.50% 1/16W
R541	1-218-722-11	s	METAL, CHIP 18K 0.50% 1/16W
R542	1-218-677-11	s	METAL, CHIP 240 0.50% 1/16W
R543	1-218-708-11	s	METAL, CHIP 4.7K 0.50% 1/16W
R544	1-218-732-11	s	METAL, CHIP 47K 0.50% 1/16W
R545	1-218-716-11	s	METAL, CHIP 10K 0.50% 1/16W
R546	1-218-716-11	s	METAL, CHIP 10K 0.50% 1/16W
R547	1-218-723-11	s	METAL, CHIP 20K 0.50% 1/16W
R548	1-218-700-11	s	METAL, CHIP 2.2K 0.50% 1/16W
R549	1-218-723-11	s	METAL, CHIP 20K 0.50% 1/16W
R550	1-218-702-11	s	METAL, CHIP 2.7K 0.50% 1/16W
R551	1-218-716-11	s	METAL, CHIP 10K 0.50% 1/16W
R552	1-218-748-11	s	METAL, CHIP 220K 0.50% 1/16W
R553	1-218-668-11	s	METAL, CHIP 100 0.50% 1/16W
R554	1-218-692-11	s	METAL, CHIP 1K 0.50% 1/16W
R555	1-218-692-11	s	METAL, CHIP 1K 0.50% 1/16W
R556	1-218-728-11	s	METAL, CHIP 33K 0.50% 1/16W
R557	1-218-698-11	s	METAL, CHIP 1.8K 0.50% 1/16W
R558	1-218-692-11	s	METAL, CHIP 1K 0.50% 1/16W
R559	1-218-698-11	s	METAL, CHIP 1.8K 0.50% 1/16W
R560	1-218-728-11	s	METAL, CHIP 33K 0.50% 1/16W
R561	1-218-692-11	s	METAL, CHIP 1K 0.50% 1/16W
R562	1-218-692-11	s	METAL, CHIP 1K 0.50% 1/16W
R563	1-218-713-11	s	METAL, CHIP 7.5K 0.50% 1/16W
R564	1-218-688-11	s	METAL, CHIP 680 0.50% 1/16W
R565	1-218-668-11	s	METAL, CHIP 100 0.50% 1/16W
R566	1-218-700-11	s	METAL, CHIP 2.2K 0.50% 1/16W
R567	1-218-740-11	s	METAL, CHIP 100K 0.50% 1/16W
R568	1-218-724-11	s	METAL, CHIP 22K 0.50% 1/16W
R569	1-218-702-11	s	METAL, CHIP 2.7K 0.50% 1/16W
R570	1-218-724-11	s	METAL, CHIP 22K 0.50% 1/16W
R571	1-218-732-11	s	METAL, CHIP 47K 0.50% 1/16W
R572	1-218-732-11	s	METAL, CHIP 47K 0.50% 1/16W
R573	1-218-716-11	s	METAL, CHIP 10K 0.50% 1/16W
R574	1-218-740-11	s	METAL, CHIP 100K 0.50% 1/16W
R575	1-218-740-11	s	METAL, CHIP 100K 0.50% 1/16W
R576	1-218-740-11	s	METAL, CHIP 100K 0.50% 1/16W
R577	1-218-746-11	s	METAL, CHIP 180K 0.50% 1/16W
R578	1-218-692-11	s	METAL, CHIP 1K 0.50% 1/16W
R579	1-216-864-11	s	METAL, CHIP 0 5% 1/16W
R580	1-218-692-11	s	METAL, CHIP 1K 0.50% 1/16W
R581	1-218-716-11	s	METAL, CHIP 10K 0.50% 1/16W
R582	1-218-713-11	s	METAL, CHIP 7.5K 0.50% 1/16W
R584	1-218-644-11	s	METAL, CHIP 10 0.50% 1/16W
R585	1-218-644-11	s	METAL, CHIP 10 0.50% 1/16W [For DNV-5]
R586	1-216-864-11	s	METAL, CHIP 0 5% 1/16W
R587	1-218-740-11	s	METAL, CHIP 100K 0.50% 1/16W
R588	1-218-696-11	s	METAL, CHIP 1.5K 0.50% 1/16W [For DNV-5]

(TC-80/80A BOARD)

Ref. No. or Q'ty	Part No.	SP	Description
R589	1-218-724-11	s	METAL, CHIP 22K 0.50% 1/16W [For DNV-5]
R590	1-218-728-11	s	METAL, CHIP 33K 0.50% 1/16W
R591	1-218-730-11	s	METAL, CHIP 39K 0.50% 1/16W
R593	1-216-864-11	s	METAL, CHIP 0 5% 1/16W
R615	1-216-864-11	s	METAL, CHIP 0 5% 1/16W
R616	1-216-864-11	s	METAL, CHIP 0 5% 1/16W
R617	1-218-716-11	s	METAL, CHIP 10K 0.50% 1/16W
R618	1-218-716-11	s	METAL, CHIP 10K 0.50% 1/16W
R619	1-218-707-11	s	METAL, CHIP 4.3K 0.50% 1/16W
R620	1-218-707-11	s	METAL, CHIP 4.3K 0.50% 1/16W
R621	1-218-696-11	s	METAL, CHIP 1.5K 0.50% 1/16W
R622	1-216-864-11	s	METAL, CHIP 0 5% 1/16W
R623	1-218-696-11	s	METAL, CHIP 1.5K 0.50% 1/16W
R624	1-218-726-11	s	METAL, CHIP 27K 0.50% 1/16W
R625	1-218-676-11	s	METAL, CHIP 220 0.50% 1/16W
R626	1-218-700-11	s	METAL, CHIP 2.2K 0.50% 1/16W
R627	1-218-692-11	s	METAL, CHIP 1K 0.50% 1/16W
R628	1-218-712-11	s	METAL, CHIP 6.8K 0.50% 1/16W
R629	1-218-712-11	s	METAL, CHIP 6.8K 0.50% 1/16W
R631	1-218-704-11	s	METAL, CHIP 3.3K 0.50% 1/16W
R632	1-218-704-11	s	METAL, CHIP 3.3K 0.50% 1/16W
R633	1-218-694-11	s	METAL, CHIP 1.2K 0.50% 1/16W
R634	1-218-726-11	s	METAL, CHIP 27K 0.50% 1/16W
R635	1-218-701-11	s	METAL, CHIP 2.4K 0.50% 1/16W
R636	1-218-701-11	s	METAL, CHIP 2.4K 0.50% 1/16W
R637	1-218-716-11	s	METAL, CHIP 10K 0.50% 1/16W
R638	1-218-700-11	s	METAL, CHIP 2.2K 0.50% 1/16W
R639	1-218-644-11	s	METAL, CHIP 10 0.50% 1/16W
R640	1-218-683-11	s	METAL, CHIP 430 0.50% 1/16W
R641	1-218-722-11	s	METAL, CHIP 18K 0.50% 1/16W
R642	1-218-677-11	s	METAL, CHIP 240 0.50% 1/16W
R643	1-218-708-11	s	METAL, CHIP 4.7K 0.50% 1/16W
R644	1-218-732-11	s	METAL, CHIP 47K 0.50% 1/16W
R645	1-218-716-11	s	METAL, CHIP 10K 0.50% 1/16W
R646	1-218-716-11	s	METAL, CHIP 10K 0.50% 1/16W
R647	1-218-723-11	s	METAL, CHIP 20K 0.50% 1/16W
R648	1-218-700-11	s	METAL, CHIP 2.2K 0.50% 1/16W
R649	1-218-723-11	s	METAL, CHIP 20K 0.50% 1/16W
R650	1-218-702-11	s	METAL, CHIP 2.7K 0.50% 1/16W
R651	1-218-716-11	s	METAL, CHIP 10K 0.50% 1/16W
R652	1-218-748-11	s	METAL, CHIP 220K 0.50% 1/16W
R653	1-218-668-11	s	METAL, CHIP 100 0.50% 1/16W
R654	1-218-692-11	s	METAL, CHIP 1K 0.50% 1/16W
R655	1-218-692-11	s	METAL, CHIP 1K 0.50% 1/16W
R656	1-218-728-11	s	METAL, CHIP 33K 0.50% 1/16W
R657	1-218-698-11	s	METAL, CHIP 1.8K 0.50% 1/16W
R658	1-218-692-11	s	METAL, CHIP 1K 0.50% 1/16W
R659	1-218-698-11	s	METAL, CHIP 1.8K 0.50% 1/16W
R660	1-218-728-11	s	METAL, CHIP 33K 0.50% 1/16W
R661	1-218-692-11	s	METAL, CHIP 1K 0.50% 1/16W
R662	1-218-692-11	s	METAL, CHIP 1K 0.50% 1/16W
R663	1-218-725-11	s	METAL, CHIP 24K 0.50% 1/16W
R664	1-218-725-11	s	METAL, CHIP 24K 0.50% 1/16W
R701	1-218-716-11	s	METAL, CHIP 10K 0.50% 1/16W
R702	1-218-748-11	s	METAL, CHIP 220K 0.50% 1/16W
R703	1-218-716-11	s	METAL, CHIP 10K 0.50% 1/16W
R704	1-218-748-11	s	METAL, CHIP 220K 0.50% 1/16W

(TC-80/80A BOARD)

Ref. No. or Q'ty	Part No.	SP	Description
R705	1-218-716-11	s	METAL, CHIP 10K 0.50% 1/16W
R706	1-218-748-11	s	METAL, CHIP 220K 0.50% 1/16W
R707	1-218-716-11	s	METAL, CHIP 10K 0.50% 1/16W
R708	1-218-748-11	s	METAL, CHIP 220K 0.50% 1/16W
R709	1-218-740-11	s	METAL, CHIP 100K 0.50% 1/16W
R710	1-218-692-11	s	METAL, CHIP 1K 0.50% 1/16W
R711	1-216-861-11	s	METAL, CHIP 2.2M 5% 1/16W
R712	1-218-740-11	s	METAL, CHIP 100K 0.50% 1/16W
R713	1-218-686-11	s	METAL, CHIP 560 0.50% 1/16W
R714	1-218-748-11	s	METAL, CHIP 220K 0.50% 1/16W
R715	1-216-857-11	s	METAL, CHIP 1M 5% 1/16W
R716	1-218-728-11	s	METAL, CHIP 33K 0.50% 1/16W
R717	1-218-716-11	s	METAL, CHIP 10K 0.50% 1/16W
R718	1-218-732-11	s	METAL, CHIP 47K 0.50% 1/16W
R719	1-218-748-11	s	METAL, CHIP 220K 0.50% 1/16W
R720	1-218-740-11	s	METAL, CHIP 100K 0.50% 1/16W
R721	1-218-740-11	s	METAL, CHIP 100K 0.50% 1/16W
R722	1-218-748-11	s	METAL, CHIP 220K 0.50% 1/16W
R723	1-218-696-11	s	METAL, CHIP 1.5K 0.50% 1/16W
R724	1-218-724-11	s	METAL, CHIP 22K 0.50% 1/16W
R725	1-218-703-11	s	METAL, CHIP 3K 0.50% 1/16W
R726	1-218-665-11	s	METAL, CHIP 75 0.50% 1/16W
R727	1-218-732-11	s	METAL, CHIP 47K 0.50% 1/16W
R728	1-218-736-11	s	METAL, CHIP 68K 0.50% 1/16W
R729	1-218-732-11	s	METAL, CHIP 47K 0.50% 1/16W
R730	1-218-724-11	s	METAL, CHIP 22K 0.50% 1/16W
R731	1-218-716-11	s	METAL, CHIP 10K 0.50% 1/16W
R732	1-218-748-11	s	METAL, CHIP 220K 0.50% 1/16W
R733	1-218-718-11	s	METAL, CHIP 12K 0.50% 1/16W
R734	1-218-716-11	s	METAL, CHIP 10K 0.50% 1/16W
R735	1-218-748-11	s	METAL, CHIP 220K 0.50% 1/16W
R736	1-218-748-11	s	METAL, CHIP 220K 0.50% 1/16W
R737	1-218-748-11	s	METAL, CHIP 220K 0.50% 1/16W
R738	1-218-700-11	s	METAL, CHIP 2.2K 0.50% 1/16W
R739-743	1-218-748-11	s	METAL, CHIP 220K 0.50% 1/16W
R744	1-218-700-11	s	METAL, CHIP 2.2K 0.50% 1/16W
R745	1-218-748-11	s	METAL, CHIP 220K 0.50% 1/16W
R746	1-218-692-11	s	METAL, CHIP 1K 0.50% 1/16W
R747	1-218-700-11	s	METAL, CHIP 2.2K 0.50% 1/16W
R748	1-218-700-11	s	METAL, CHIP 2.2K 0.50% 1/16W
R749-758	1-218-748-11	s	METAL, CHIP 220K 0.50% 1/16W
R759	1-218-700-11	s	METAL, CHIP 2.2K 0.50% 1/16W
R760	1-218-700-11	s	METAL, CHIP 2.2K 0.50% 1/16W
R761	1-218-700-11	s	METAL, CHIP 2.2K 0.50% 1/16W
R762	1-218-692-11	s	METAL, CHIP 1K 0.50% 1/16W
R763	1-218-748-11	s	METAL, CHIP 220K 0.50% 1/16W
R764	1-218-668-11	s	METAL, CHIP 100 0.50% 1/16W
R765	1-218-692-11	s	METAL, CHIP 1K 0.50% 1/16W
R766	1-218-692-11	s	METAL, CHIP 1K 0.50% 1/16W
R767	1-218-668-11	s	METAL, CHIP 100 0.50% 1/16W
R768	1-218-668-11	s	METAL, CHIP 100 0.50% 1/16W
R770	1-218-692-11	s	METAL, CHIP 1K 0.50% 1/16W
R771	1-218-732-11	s	METAL, CHIP 47K 0.50% 1/16W
R772	1-218-732-11	s	METAL, CHIP 47K 0.50% 1/16W
R773	1-218-748-11	s	METAL, CHIP 220K 0.50% 1/16W
R774	1-218-692-11	s	METAL, CHIP 1K 0.50% 1/16W
R775	1-218-716-11	s	METAL, CHIP 10K 0.50% 1/16W
R776	1-218-748-11	s	METAL, CHIP 220K 0.50% 1/16W
R777	1-218-748-11	s	METAL, CHIP 220K 0.50% 1/16W

(TC-80/80A BOARD)

Ref. No. or Q'ty	Part No.	SP	Description
R778	1-218-692-11	s	METAL, CHIP 1K 0.50% 1/16W
R779	1-218-680-11	s	METAL, CHIP 330 0.50% 1/16W
R780	1-218-680-11	s	METAL, CHIP 330 0.50% 1/16W
R781	1-218-748-11	s	METAL, CHIP 220K 0.50% 1/16W
R782	1-218-748-11	s	METAL, CHIP 220K 0.50% 1/16W
R783	1-218-748-11	s	METAL, CHIP 220K 0.50% 1/16W
R786	1-218-732-11	s	METAL, CHIP 47K 0.50% 1/16W
R787	1-218-700-11	s	METAL, CHIP 2.2K 0.50% 1/16W
R788-800	1-218-732-11	s	METAL, CHIP 47K 0.50% 1/16W
R801-805	1-218-748-11	s	METAL, CHIP 220K 0.50% 1/16W
R806	1-218-716-11	s	METAL, CHIP 10K 0.50% 1/16W
R807	1-218-716-11	s	METAL, CHIP 10K 0.50% 1/16W
R808	1-218-692-11	s	METAL, CHIP 1K 0.50% 1/16W
R809	1-218-716-11	s	METAL, CHIP 10K 0.50% 1/16W
R810	1-218-716-11	s	METAL, CHIP 10K 0.50% 1/16W
R811	1-218-748-11	s	METAL, CHIP 220K 0.50% 1/16W
R812	1-218-748-11	s	METAL, CHIP 220K 0.50% 1/16W
R813	1-218-748-11	s	METAL, CHIP 220K 0.50% 1/16W
R814	1-218-716-11	s	METAL, CHIP 10K 0.50% 1/16W
R815	1-218-732-11	s	METAL, CHIP 47K 0.50% 1/16W
R816	1-218-732-11	s	METAL, CHIP 47K 0.50% 1/16W
R817	1-218-716-11	s	METAL, CHIP 10K 0.50% 1/16W
R818	1-218-692-11	s	METAL, CHIP 1K 0.50% 1/16W
R819	1-216-864-11	s	METAL, CHIP 0 5% 1/16W [Except DNV-5]
R820	1-218-692-11	s	METAL, CHIP 1K 0.50% 1/16W
R821	1-218-692-11	s	METAL, CHIP 1K 0.50% 1/16W
R822	1-218-748-11	s	METAL, CHIP 220K 0.50% 1/16W
R823	1-216-864-11	s	METAL, CHIP 0 5% 1/16W
R824	1-218-692-11	s	METAL, CHIP 1K 0.50% 1/16W [For DNV-5]
R829	1-218-700-11	s	METAL, CHIP 2.2K 0.50% 1/16W
R830	1-218-700-11	s	METAL, CHIP 2.2K 0.50% 1/16W
R831	1-218-748-11	s	METAL, CHIP 220K 0.50% 1/16W
R832	1-218-692-11	s	METAL, CHIP 1K 0.50% 1/16W
R833	1-218-713-11	s	METAL, CHIP 7.5K 0.50% 1/16W
R834	1-218-720-11	s	METAL, CHIP 15K 0.50% 1/16W
R835	1-218-740-11	s	METAL, CHIP 100K 0.50% 1/16W
R836	1-218-720-11	s	METAL, CHIP 15K 0.50% 1/16W
R837	1-218-740-11	s	METAL, CHIP 100K 0.50% 1/16W
R838	1-218-692-11	s	METAL, CHIP 1K 0.50% 1/16W
R839	1-218-716-11	s	METAL, CHIP 10K 0.50% 1/16W
R840	1-218-692-11	s	METAL, CHIP 1K 0.50% 1/16W
R841	1-218-716-11	s	METAL, CHIP 10K 0.50% 1/16W
R842	1-218-692-11	s	METAL, CHIP 1K 0.50% 1/16W
R843	1-218-692-11	s	METAL, CHIP 1K 0.50% 1/16W
R844	1-218-692-11	s	METAL, CHIP 1K 0.50% 1/16W
R845	1-218-692-11	s	METAL, CHIP 1K 0.50% 1/16W
R910	1-218-732-11	s	METAL, CHIP 47K 0.50% 1/16W
R911	1-218-732-11	s	METAL, CHIP 47K 0.50% 1/16W
R951	1-218-751-11	s	METAL, CHIP 300K 0.50% 1/16W
R952	1-218-724-11	s	METAL, CHIP 22K 0.50% 1/16W
R953	1-218-730-11	s	METAL, CHIP 39K 0.50% 1/16W
R954	1-218-742-11	s	METAL, CHIP 120K 0.50% 1/16W
R955	1-218-751-11	s	METAL, CHIP 300K 0.50% 1/16W
R956	1-218-724-11	s	METAL, CHIP 22K 0.50% 1/16W
R957	1-218-730-11	s	METAL, CHIP 39K 0.50% 1/16W
R958	1-218-742-11	s	METAL, CHIP 120K 0.50% 1/16W
R1000	1-216-864-11	s	METAL, CHIP 0 5% 1/16W

(TC-80/80A BOARD)

Ref. No. or Q'ty	Part No.	SP	Description
R3000	1-218-644-11	s	METAL, CHIP 10 0.50% 1/16W [For DNV-5]
R4000	1-218-692-11	s	METAL, CHIP 1K 0.50% 1/16W [Except DNV-5]
RB101	1-236-907-11	s	NETWORK RESISTOR (CHIP) 100K
RB507	1-239-426-11	s	NETWORK RESISTOR (CHIP) 2.2K
RB701	1-239-444-11	s	NETWORK RESISTOR (CHIP) 220K
RB702	1-239-444-11	s	NETWORK RESISTOR (CHIP) 220K
RB703	1-239-444-11	s	NETWORK RESISTOR (CHIP) 220K
RB704	1-239-426-11	s	NETWORK RESISTOR (CHIP) 2.2K
RB705	1-239-426-11	s	NETWORK RESISTOR (CHIP) 2.2K
RB706	1-239-426-11	s	NETWORK RESISTOR (CHIP) 2.2K
RB708-712	1-239-444-11	s	NETWORK RESISTOR (CHIP) 220K
RB713	1-239-430-11	s	NETWORK RESISTOR (CHIP) 4.7K
RB714	1-239-430-11	s	NETWORK RESISTOR (CHIP) 4.7K
RB716	1-236-904-11	s	NETWORK RESISTOR (CHIP) 1.0K
RB901	1-239-389-11	s	NWTWORK RESISTOR (CHIP) 47K
RB902	1-239-389-11	s	NWTWORK RESISTOR (CHIP) 47K
RB903	1-239-389-11	s	NWTWORK RESISTOR (CHIP) 47K
RV101	1-223-684-11	s	RES, VAR, CARBON 5K
RV201	1-223-684-11	s	RES, VAR, CARBON 5K
RV501	1-237-033-11	s	RES, ADJ METAL 1K
RV502	1-237-033-11	s	RES, ADJ METAL 1K
RV503	1-223-684-11	s	RES, VAR, CARBON 5K
RV505	1-223-684-11	s	RES, VAR, CARBON 5K
RV951	1-237-039-11	s	RES, ADJ METAL 100K
RV952	1-237-039-11	s	RES, ADJ METAL 100K
S101	1-571-087-11	s	SWITCH, SLIDE
S102	1-571-277-31	s	SWITCH, SLIDE
S103	1-570-842-11	s	SWITCH, SLIDE
S104	1-571-277-31	s	SWITCH, SLIDE
S201	1-571-087-11	s	SWITCH, SLIDE
S203	1-570-842-11	s	SWITCH, SLIDE
S204	1-571-277-31	s	SWITCH, SLIDE
S501	1-571-275-31	s	SWITCH, SLIDE
S502	1-570-834-11	s	SWITCH, SLIDE
S601	1-571-275-31	s	SWITCH, SLIDE
S701	1-570-860-11	s	SWITCH, SLIDE
S702	1-570-852-11	s	SWITCH, SLIDE
S703	1-570-852-11	s	SWITCH, SLIDE
S704	1-570-852-11	s	SWITCH, SLIDE
S705	1-570-852-11	s	SWITCH, SLIDE
S706-710	1-572-725-11	s	SWITCH, PUSH
S711	1-570-860-11	s	SWITCH, SLIDE
S712	1-692-881-41	s	SWITCH, SLIDE
S901	1-572-725-11	s	SWITCH, PUSH
X701	1-760-272-11	s	CRYSTAL 13.500000MHz
X702	1-760-272-11	s	CRYSTAL 13.500000MHz
X703	1-760-622-21	s	CRYSTAL 32.768KHz

TG-161/161(P) BOARD *For DNW-7/7P only

Ref. No. or Q'ty	Part No.	SP	Description
1pc	A-8277-774-A	o	MOUNTED CIRCUIT BOARD, TG-161 [For UC, J]
	A-8277-809-A	o	MOUNTED CIRCUIT BOARD, TG-161(P) [For EK]
C1	1-113-985-11	s	TANTALUM, CHIP 10uF 20% 20V
C2	1-164-156-11	s	CERAMIC, CHIP 0.1uF 25V
C3	1-162-919-11	s	CERAMIC, CHIP 22PF 5% 50V
C4	1-162-919-11	s	CERAMIC, CHIP 22PF 5% 50V
C5	1-164-156-11	s	CERAMIC, CHIP 0.1uF 25V
C7	1-162-919-11	s	CERAMIC, CHIP 22PF 5% 50V
C9	1-113-985-11	s	TANTALUM, CHIP 10uF 20% 20V
C10	1-164-156-11	s	CERAMIC, CHIP 0.1uF 25V
C11	1-164-156-11	s	CERAMIC, CHIP 0.1uF 25V
C12	1-164-156-11	s	CERAMIC, CHIP 0.1uF 25V
C14	1-162-915-11	s	CERAMIC, CHIP 10PF 50V
C15	1-162-915-11	s	CERAMIC, CHIP 10PF 50V
C16	1-164-156-11	s	CERAMIC, CHIP 0.1uF 25V
C17	1-164-156-11	s	CERAMIC, CHIP 0.1uF 25V
C18	1-113-985-11	s	TANTALUM, CHIP 10uF 20% 20V
C19	1-162-970-11	s	CERAMIC, CHIP 0.01uF 10% 25V
C20	1-104-851-11	s	TANTALUM, CHIP 10uF 20% 10V
C21	1-113-985-11	s	TANTALUM, CHIP 10uF 20% 20V
C22	1-164-156-11	s	CERAMIC, CHIP 0.1uF 25V
C23	1-162-927-11	s	CERAMIC, CHIP 100PF 5% 50V
C24	1-164-156-11	s	CERAMIC, CHIP 0.1uF 25V
C25	1-164-156-11	s	CERAMIC, CHIP 0.1uF 25V
C27	1-164-156-11	s	CERAMIC, CHIP 0.1uF 25V
C28	1-164-156-11	s	CERAMIC, CHIP 0.1uF 25V
C31	1-162-919-11	s	CERAMIC, CHIP 22PF 5% 50V
C32	1-162-917-11	s	CERAMIC, CHIP 15PF 5% 50V
C35	1-162-919-11	s	CERAMIC, CHIP 22PF 5% 50V
C36	1-162-915-11	s	CERAMIC, CHIP 10PF 50V
C38	1-162-915-11	s	CERAMIC, CHIP 10PF 50V
C39	1-162-919-11	s	CERAMIC, CHIP 22PF 5% 50V
C43	1-164-156-11	s	CERAMIC, CHIP 0.1uF 25V [For DNW-7(UC) :S/N 10031 and higher] [For DNW-7(J) :S/N 30021 and higher] [For DNW-7P(EK):S/N 40031 and higher]
C44	1-104-851-11	s	TANTALUM, CHIP 10uF 20% 10V [For DNW-7(UC) :S/N 10031 and higher] [For DNW-7(J) :S/N 30021 and higher] [For DNW-7P(EK):S/N 40031 and higher]
CN1	1-691-943-21	o	CONNECTOR, BOARD TO BOARD 30P
CN2	1-568-367-11	s	CONNECTOR, BOARD TO BOARD 18P
CN3	1-568-367-11	s	CONNECTOR, BOARD TO BOARD 18P
D1	8-719-029-57	s	DIODE RD2.4UH-T1
D2	8-719-948-47	s	DIODE HSM88AS
D3	8-719-948-47	s	DIODE HSM88AS
D4	8-719-948-47	s	DIODE HSM88AS
D5	8-719-948-47	s	DIODE HSM88AS
IC1	8-752-353-25	s	IC CXD1265R
IC2	8-759-079-60	s	IC TC74VHC32FS(EL)
IC3	8-759-079-60	s	IC TC74VHC32FS(EL)
IC4	8-759-079-49	s	IC TC74VHC04FS(EL)
IC5	8-759-079-61	s	IC TC74VHC74FS(EL)

(TG-161/161(P) BOARD)

Ref. No. or Q'ty	Part No.	SP	Description
IC6	8-759-049-58	s	IC SN74HC04APW-E05
IC7	8-759-079-54	s	IC TC74VHC10FS(EL)
IC8	8-759-337-40	s	IC NJM2904V(TE2)
IC9	8-759-238-88	s	IC TC7S02FU
IC10	8-759-196-93	s	IC TC7SH00FU-TE85R
IC11	8-759-196-96	s	IC TC7SH08FU-TE85R
IC12	8-759-196-96	s	IC TC7SH08FU-TE85R
IC13	8-759-050-92	s	IC SN74HC164APW-E05
			[For DNW-7(UC) :S/N 10031 and higher]
			[For DNW-7(J) :S/N 30021 and higher]
			[For DNW-7P(EK):S/N 40031 and higher]
IC14	8-759-392-02	s	IC TC7SH86FU-TE85L
			[For DNW-7(UC) :S/N 10031 and higher]
			[For DNW-7(J) :S/N 30021 and higher]
			[For DNW-7P(EK):S/N 40031 and higher]
IC15	8-759-271-86	s	IC TC7SH04FU
			[For DNW-7(UC) :S/N 10031 and higher]
			[For DNW-7(J) :S/N 30021 and higher]
			[For DNW-7P(EK):S/N 40031 and higher]
IC16	8-759-196-97	s	IC TC7SH32FU-TE85R
			[For DNW-7(UC) :S/N 10031 and higher]
			[For DNW-7(J) :S/N 30021 and higher]
			[For DNW-7P(EK):S/N 40031 and higher]
IC17	8-759-196-93	s	IC TC7SH00FU-TE85R
			[For DNW-7(UC) :S/N 10031 and higher]
			[For DNW-7(J) :S/N 30021 and higher]
			[For DNW-7P(EK):S/N 40031 and higher]
IC18	8-759-049-60	s	IC SN74HC08APW-E05
			[For DNW-7(UC) :S/N 10031 and higher]
			[For DNW-7(J) :S/N 30021 and higher]
			[For DNW-7P(EK):S/N 40031 and higher]
Q1	8-729-141-48	s	TRANSISTOR 2SB624-BV345
R1	1-218-652-11	s	METAL, CHIP 22 0.50% 1/16W
R2	1-218-652-11	s	METAL, CHIP 22 0.50% 1/16W
R3	1-218-644-11	s	METAL, CHIP 10 0.50% 1/16W
R4	1-218-644-11	s	METAL, CHIP 10 0.50% 1/16W
R5	1-218-667-11	s	METAL, CHIP 91 0.50% 1/16W
R6	1-218-652-11	s	METAL, CHIP 22 0.50% 1/16W
R7	1-218-668-11	s	METAL, CHIP 100 0.50% 1/16W
R8	1-218-668-11	s	METAL, CHIP 100 0.50% 1/16W
R9	1-218-644-11	s	METAL, CHIP 10 0.50% 1/16W
R10	1-218-644-11	s	METAL, CHIP 10 0.50% 1/16W
R12	1-218-644-11	s	METAL, CHIP 10 0.50% 1/16W
R13	1-218-644-11	s	METAL, CHIP 10 0.50% 1/16W
R14	1-218-660-11	s	METAL, CHIP 47 0.50% 1/16W
R15	1-218-674-11	s	METAL, CHIP 180 0.50% 1/16W
R16	1-218-676-11	s	METAL, CHIP 220 0.50% 1/16W
R17	1-218-676-11	s	METAL, CHIP 220 0.50% 1/16W
R18	1-218-656-11	s	METAL, CHIP 33 0.50% 1/16W
R19	1-218-656-11	s	METAL, CHIP 33 0.50% 1/16W
R20	1-218-644-11	s	METAL, CHIP 10 0.50% 1/16W
			[For DNW-7(UC) :S/N 10001 to 10030]
			[For DNW-7(J) :S/N 30001 to 30020]
			[For DNW-7P(EK):S/N 40001 to 40030]
R21	1-218-644-11	s	METAL, CHIP 10 0.50% 1/16W
R22	1-218-644-11	s	METAL, CHIP 10 0.50% 1/16W
R23	1-218-644-11	s	METAL, CHIP 10 0.50% 1/16W
R24	1-218-644-11	s	METAL, CHIP 10 0.50% 1/16W

(TG-161/161(P) BOARD)

Ref. No. or Q'ty	Part No.	SP	Description
R25	1-218-644-11	s	METAL, CHIP 10 0.50% 1/16W
			[For DNW-7(UC) :S/N 10001 to 10030]
			[For DNW-7(J) :S/N 30001 to 30020]
			[For DNW-7P(EK):S/N 40001 to 40030]
R26	1-218-644-11	s	METAL, CHIP 10 0.50% 1/16W
R27	1-216-864-11	s	METAL, CHIP 0 5% 1/16W
R28	1-218-716-11	s	METAL, CHIP 10K 0.50% 1/16W
R29	1-218-703-11	s	METAL, CHIP 3K 0.50% 1/16W
R30	1-218-716-11	s	METAL, CHIP 10K 0.50% 1/16W
R31	1-218-672-11	s	METAL, CHIP 150 0.50% 1/16W
R32	1-218-741-11	s	METAL, CHIP 110K 0.5% 1/16W
R33	1-216-791-11	s	METAL, CHIP 3.3 5% 1/16W
			[For DNW-7(UC) :S/N 10001 and higher]
			[For DNW-7(J) :S/N 30001 and higher]
			[For DNW-7P(EK):S/N 40031 and higher]
	1-218-656-11	s	METAL, CHIP 33 0.50% 1/16W
			[For DNW-7P(EK):S/N 40001 to 40030]
R34	1-216-791-11	s	METAL, CHIP 3.3 5% 1/16W
R35	1-218-692-11	s	METAL, CHIP 1K 0.50% 1/16W
R36	1-218-734-11	s	METAL, CHIP 56K 0.50% 1/16W
R37	1-218-734-11	s	METAL, CHIP 56K 0.50% 1/16W
R38	1-218-726-11	s	METAL, CHIP 27K 0.50% 1/16W
R39	1-218-726-11	s	METAL, CHIP 27K 0.50% 1/16W
R40	1-218-716-11	s	METAL, CHIP 10K 0.50% 1/16W
R41	1-216-864-11	s	METAL, CHIP 0 5% 1/16W [For UC, J]
R42	1-216-864-11	s	METAL, CHIP 0 5% 1/16W [For EK]
R43	1-216-864-11	s	METAL, CHIP 0 5% 1/16W
R45	1-216-864-11	s	METAL, CHIP 0 5% 1/16W
R47	1-218-740-11	s	METAL, CHIP 100K 0.50% 1/16W
R48	1-218-740-11	s	METAL, CHIP 100K 0.50% 1/16W
R49	1-218-644-11	s	METAL, CHIP 10 0.50% 1/16W
R50	1-218-644-11	s	METAL, CHIP 10 0.50% 1/16W
R51	1-218-644-11	s	METAL, CHIP 10 0.50% 1/16W
R52	1-218-692-11	s	METAL, CHIP 1K 0.50% 1/16W
R55	1-218-660-11	s	METAL, CHIP 47 0.50% 1/16W
R56	1-218-660-11	s	METAL, CHIP 47 0.50% 1/16W
R57	1-218-674-11	s	METAL, CHIP 180 0.50% 1/16W
R58	1-218-660-11	s	METAL, CHIP 47 0.50% 1/16W
R59	1-218-668-11	s	METAL, CHIP 100 0.50% 1/16W
R61	1-218-652-11	s	METAL, CHIP 22 0.50% 1/16W
R62	1-218-664-11	s	METAL, CHIP 68 0.50% 1/16W
R63	1-218-678-11	s	METAL, CHIP 270 0.50% 1/16W
R64	1-218-652-11	s	METAL, CHIP 22 0.50% 1/16W
R65	1-218-672-11	s	METAL, CHIP 150 0.50% 1/16W
R66	1-218-652-11	s	METAL, CHIP 22 0.50% 1/16W
R67	1-218-676-11	s	METAL, CHIP 220 0.50% 1/16W
R68	1-218-668-11	s	METAL, CHIP 100 0.50% 1/16W
			[For DNW-7(UC) :S/N 10031 and higher]
			[For DNW-7(J) :S/N 30021 and higher]
			[For DNW-7P(EK):S/N 40031 and higher]
	1-218-692-11	s	METAL, CHIP 1K 0.50% 1/16W
			[For DNW-7(UC) :S/N 10001 to 10030]
			[For DNW-7(J) :S/N 30001 to 30020]
			[For DNW-7P(EK):S/N 40001 to 40030]
R69	1-218-652-11	s	METAL, CHIP 22 0.50% 1/16W
R72	1-218-652-11	s	METAL, CHIP 22 0.50% 1/16W
R73	1-218-708-11	s	METAL, CHIP 4.7K 0.50% 1/16W
R74	1-218-721-11	s	METAL, CHIP 16K 0.50% 1/16W
R75	1-218-702-11	s	METAL, CHIP 2.7K 0.50% 1/16W
R76	1-218-660-11	s	METAL, CHIP 47 0.50% 1/16W

http://getMANUAL.com

(TG-161/161(P) BOARD)

Ref. No. or Q'ty	Part No.	SP	Description
R77	1-216-864-11	s	METAL, CHIP 0 5% 1/16W [For DNW-7(UC) :S/N 10031 and higher] [For DNW-7(J) :S/N 30021 and higher]
R78	1-216-864-11	s	METAL, CHIP 0 5% 1/16W [For DNW-7P(EK):S/N 40031 and higher]
R79	1-216-864-11	s	METAL, CHIP 0 5% 1/16W [For DNW-7P(EK):S/N 40031 and higher]
R80	1-218-732-11	s	METAL, CHIP 47K 0.50% 1/16W [For DNW-7(UC) :S/N 10031 and higher] [For DNW-7(J) :S/N 30021 and higher] [For DNW-7P(EK):S/N 40031 and higher]
R81	1-218-660-11	s	METAL, CHIP 47 0.50% 1/16W [For DNW-7(UC) :S/N 10031 and higher] [For DNW-7(J) :S/N 30021 and higher] [For DNW-7P(EK):S/N 40031 and higher]
R82	1-218-660-11	s	METAL, CHIP 47 0.50% 1/16W [For DNW-7(UC) :S/N 10031 and higher] [For DNW-7(J) :S/N 30021 and higher] [For DNW-7P(EK):S/N 40031 and higher]
X1	1-579-713-11	s	VCO, CRYSTAL 28.636000MHz [For UC, J]
	1-767-206-11	s	CRYSTAL 28.500000MHz [For EK]

TG-164/164(P) BOARD *For DNW-90/90P/90WS/90WSP only

Ref. No. or Q'ty	Part No.	SP	Description
1pc	A-8311-763-A	o	MOUNTED CIRCUIT BOARD, TG-164 [For UC, J]
	A-8311-765-A	o	MOUNTED CIRCUIT BOARD, TG-164(P) [For EK]
C1	1-113-985-11	s	TANTALUM, CHIP 10uF 20% 20V
C2	1-164-156-11	s	CERAMIC, CHIP 0.1uF 25V
C5	1-164-156-11	s	CERAMIC, CHIP 0.1uF 25V
C9	1-113-985-11	s	TANTALUM, CHIP 10uF 20% 20V
C10	1-164-156-11	s	CERAMIC, CHIP 0.1uF 25V
C11	1-164-156-11	s	CERAMIC, CHIP 0.1uF 25V
C12	1-164-156-11	s	CERAMIC, CHIP 0.1uF 25V
C13	1-164-156-11	s	CERAMIC, CHIP 0.1uF 25V
C14	1-162-915-11	s	CERAMIC, CHIP 10PF 50V
C15	1-162-915-11	s	CERAMIC, CHIP 10PF 50V
C16	1-164-156-11	s	CERAMIC, CHIP 0.1uF 25V
C17	1-164-156-11	s	CERAMIC, CHIP 0.1uF 25V
C18	1-113-985-11	s	TANTALUM, CHIP 10uF 20% 20V
C19	1-162-970-11	s	CERAMIC, CHIP 0.01uF 10% 25V
C20	1-113-985-11	s	TANTALUM, CHIP 10uF 20% 20V [For UC, J]
	1-104-851-11	s	TANTALUM, CHIP 10uF 20% 10V [For EK]
C21	1-113-985-11	s	TANTALUM, CHIP 10uF 20% 20V
C22	1-164-156-11	s	CERAMIC, CHIP 0.1uF 25V
C23	1-162-927-11	s	CERAMIC, CHIP 100PF 5% 50V
C24	1-164-156-11	s	CERAMIC, CHIP 0.1uF 25V
C31	1-162-917-11	s	CERAMIC, CHIP 15PF 5% 50V
C32	1-162-921-11	s	CERAMIC, CHIP 33PF 5% 50V
C35	1-162-915-11	s	CERAMIC, CHIP 10PF 50V
C36	1-162-915-11	s	CERAMIC, CHIP 10PF 50V
C37	1-162-915-11	s	CERAMIC, CHIP 10PF 50V
C38	1-162-915-11	s	CERAMIC, CHIP 10PF 50V
C39	1-162-919-11	s	CERAMIC, CHIP 22PF 5% 50V
C47	1-164-156-11	s	CERAMIC, CHIP 0.1uF 25V
C48	1-164-156-11	s	CERAMIC, CHIP 0.1uF 25V
C49	1-162-919-11	s	CERAMIC, CHIP 22PF 5% 50V
CN1	1-691-943-21	o	CONNECTOR, BOARD TO BOARD 30P
CN2	1-568-367-11	s	CONNECTOR, BOARD TO BOARD 18P
CN3	1-568-367-11	s	CONNECTOR, BOARD TO BOARD 18P
D1	8-719-029-57	s	DIODE RD2.4UH-T1
D2	8-719-948-47	s	DIODE HSM88AS
D5	8-719-948-47	s	DIODE HSM88AS
D6	8-719-948-47	s	DIODE HSM88AS
D7	8-719-948-47	s	DIODE HSM88AS
D8	8-719-948-47	s	DIODE HSM88AS
IC2	8-759-079-60	s	IC TC74VHC32FS(EL)
IC3	8-759-079-60	s	IC TC74VHC32FS(EL)
IC4	8-759-079-49	s	IC TC74VHC04FS(EL)
IC5	8-759-079-61	s	IC TC74VHC74FS(EL)
IC6	8-759-079-61	s	IC TC74VHC74FS(EL)
IC7	8-759-079-54	s	IC TC74VHC10FS(EL)
IC8	8-759-337-40	s	IC NJM2904V(TE2)
IC10	8-759-196-93	s	IC TC7SH00FU-TE85R
Q1	8-729-141-48	s	TRANSISTOR 2SB624-BV345

(TG-164/164(P) BOARD)

Ref. No. or Q'ty	Part No.	SP	Description
R1	1-218-716-11	s	METAL, CHIP 10K 0.50% 1/16W
R2	1-218-684-11	s	METAL, CHIP 470 0.50% 1/16W
R3	1-218-644-11	s	METAL, CHIP 10 0.50% 1/16W
R4	1-218-644-11	s	METAL, CHIP 10 0.50% 1/16W
R5	1-218-644-11	s	METAL, CHIP 10 0.50% 1/16W
R6	1-218-732-11	s	METAL, CHIP 47K 0.50% 1/16W
R7	1-218-644-11	s	METAL, CHIP 10 0.50% 1/16W
R8	1-218-692-11	s	METAL, CHIP 1K 0.50% 1/16W
R9-13	1-218-644-11	s	METAL, CHIP 10 0.50% 1/16W
R14	1-218-660-11	s	METAL, CHIP 47 0.50% 1/16W
R15	1-218-676-11	s	METAL, CHIP 220 0.50% 1/16W
R16	1-218-683-11	s	METAL, CHIP 430 0.50% 1/16W
R17	1-218-683-11	s	METAL, CHIP 430 0.50% 1/16W
R18	1-218-656-11	s	METAL, CHIP 33 0.50% 1/16W
R19	1-218-656-11	s	METAL, CHIP 33 0.50% 1/16W
R20-26	1-218-644-11	s	METAL, CHIP 10 0.50% 1/16W
R27	1-216-864-11	s	METAL, CHIP 0 5% 1/16W
R28	1-218-716-11	s	METAL, CHIP 10K 0.50% 1/16W
R29	1-218-703-11	s	METAL, CHIP 3K 0.50% 1/16W
R30	1-218-716-11	s	METAL, CHIP 10K 0.50% 1/16W
R31	1-218-672-11	s	METAL, CHIP 150 0.50% 1/16W
R32	1-218-740-11	s	METAL, CHIP 100K 0.50% 1/16W
R33	1-216-791-11	s	METAL, CHIP 3.3 5% 1/16W
R34	1-216-791-11	s	METAL, CHIP 3.3 5% 1/16W
R35	1-218-692-11	s	METAL, CHIP 1K 0.50% 1/16W
R36	1-218-734-11	s	METAL, CHIP 56K 0.50% 1/16W
R37	1-218-734-11	s	METAL, CHIP 56K 0.50% 1/16W
R38	1-218-726-11	s	METAL, CHIP 27K 0.50% 1/16W
R39	1-218-726-11	s	METAL, CHIP 27K 0.50% 1/16W
R40	1-218-652-11	s	METAL, CHIP 22 0.50% 1/16W
R41	1-216-864-11	s	METAL, CHIP 0 5% 1/16W [For UC, J]
R42	1-216-864-11	s	METAL, CHIP 0 5% 1/16W [For EK]
R44	1-216-864-11	s	METAL, CHIP 0 5% 1/16W
R47	1-218-668-11	s	METAL, CHIP 100 0.50% 1/16W
R48	1-218-740-11	s	METAL, CHIP 100K 0.50% 1/16W
R49	1-218-644-11	s	METAL, CHIP 10 0.50% 1/16W
R50	1-218-652-11	s	METAL, CHIP 22 0.50% 1/16W
R51	1-218-644-11	s	METAL, CHIP 10 0.50% 1/16W
R52	1-218-692-11	s	METAL, CHIP 1K 0.50% 1/16W
R53	1-218-652-11	s	METAL, CHIP 22 0.50% 1/16W
R54	1-218-676-11	s	METAL, CHIP 220 0.50% 1/16W
R56	1-218-660-11	s	METAL, CHIP 47 0.50% 1/16W
R57	1-218-670-11	s	METAL, CHIP 120 0.50% 1/16W
R59	1-218-668-11	s	METAL, CHIP 100 0.50% 1/16W
R60	1-218-652-11	s	METAL, CHIP 22 0.50% 1/16W
R61	1-218-652-11	s	METAL, CHIP 22 0.50% 1/16W
R62	1-218-668-11	s	METAL, CHIP 100 0.50% 1/16W
R63	1-218-676-11	s	METAL, CHIP 220 0.50% 1/16W
R64	1-218-652-11	s	METAL, CHIP 22 0.50% 1/16W
R65	1-218-672-11	s	METAL, CHIP 150 0.50% 1/16W
R66	1-218-672-11	s	METAL, CHIP 150 0.50% 1/16W
R67	1-218-676-11	s	METAL, CHIP 220 0.50% 1/16W
R68	1-218-692-11	s	METAL, CHIP 1K 0.50% 1/16W
R69	1-218-652-11	s	METAL, CHIP 22 0.50% 1/16W
R71	1-218-652-11	s	METAL, CHIP 22 0.50% 1/16W
R73	1-218-708-11	s	METAL, CHIP 4.7K 0.50% 1/16W
R74	1-218-716-11	s	METAL, CHIP 10K 0.50% 1/16W
R75	1-218-702-11	s	METAL, CHIP 2.7K 0.50% 1/16W
R76	1-218-660-11	s	METAL, CHIP 47 0.50% 1/16W

(TG-164/164(P) BOARD)

Ref. No. or Q'ty	Part No.	SP	Description
R79	1-218-668-11	s	METAL, CHIP 100 0.50% 1/16W
R80	1-218-672-11	s	METAL, CHIP 150 0.50% 1/16W
R81	1-218-660-11	s	METAL, CHIP 47 0.50% 1/16W
S1	1-571-275-31	s	SWITCH, SLIDE
X1	1-760-091-11	s	VCO, CRYSTAL 36.000000MHz [For EK]

VA-167 BOARD *For DNW-7/7P/90/90P/90WS/90WSP only

Ref. No. or Q'ty	Part No.	SP	Description
1pc	A-8277-775-A	o	MOUNTED CIRCUIT BOARD, VA-167
C1	1-115-581-11	s	TANTALUM, CHIP 100uF 20% 16V
C2	1-115-581-11	s	TANTALUM, CHIP 100uF 20% 16V
C6	1-164-156-11	s	CERAMIC, CHIP 0.1uF 25V
C7	1-107-685-11	s	TANTALUM, CHIP 15uF 20% 6.3V
C8	1-135-177-21	s	TANTALUM, CHIP 1uF 10% 25V
C10	1-164-156-11	s	CERAMIC, CHIP 0.1uF 25V
C11	1-135-177-21	s	TANTALUM, CHIP 1uF 10% 25V
C12	1-113-994-11	s	TANTALUM, CHIP 6.8uF 20% 16V
C13	1-164-156-11	s	CERAMIC, CHIP 0.1uF 25V
C14	1-164-156-11	s	CERAMIC, CHIP 0.1uF 25V
C15	1-164-156-11	s	CERAMIC, CHIP 0.1uF 25V
C16	1-164-156-11	s	CERAMIC, CHIP 0.1uF 25V
C17	1-135-179-21	s	TANTALUM 2.2uF 10% 16V
C18	1-162-927-11	s	CERAMIC, CHIP 100PF 5% 50V
C19	1-162-927-11	s	CERAMIC, CHIP 100PF 5% 50V
C20	1-164-217-11	s	CERAMIC, CHIP 150PF 5% 50V
C21	1-104-563-11	s	FILM, CHIP 0.1uF 5% 16V
C22	1-104-563-11	s	FILM, CHIP 0.1uF 5% 16V
C23	1-104-563-11	s	FILM, CHIP 0.1uF 5% 16V
C24-30	1-164-156-11	s	CERAMIC, CHIP 0.1uF 25V
C31	1-162-957-11	s	CERAMIC, CHIP 220PF 5% 50V
C32	1-164-156-11	s	CERAMIC, CHIP 0.1uF 25V
C33	1-135-210-11	s	TANTALUM, CHIP 4.7uF 20% 10V
C34	1-135-210-11	s	TANTALUM, CHIP 4.7uF 20% 10V
C35	1-135-210-11	s	TANTALUM, CHIP 4.7uF 20% 10V
C36	1-113-994-11	s	TANTALUM, CHIP 6.8uF 20% 16V
C37	1-162-907-11	s	CERAMIC, CHIP 2PF 50V
C38	1-164-156-11	s	CERAMIC, CHIP 0.1uF 25V
C39	1-162-919-11	s	CERAMIC, CHIP 22PF 5% 50V
C40	1-162-919-11	s	CERAMIC, CHIP 22PF 5% 50V
C41	1-162-919-11	s	CERAMIC, CHIP 22PF 5% 50V
C42	1-164-156-11	s	CERAMIC, CHIP 0.1uF 25V
C43	1-162-974-11	s	CERAMIC, CHIP 0.01uF 50V
C101	1-113-990-11	s	TANTALUM, CHIP 15uF 20% 16V
C102	1-164-156-11	s	CERAMIC, CHIP 0.1uF 25V
C103	1-113-990-11	s	TANTALUM, CHIP 15uF 20% 16V
C104	1-164-156-11	s	CERAMIC, CHIP 0.1uF 25V
C105	1-104-851-11	s	TANTALUM, CHIP 10uF 20% 10V
C106	1-135-210-11	s	TANTALUM, CHIP 4.7uF 20% 10V
C107	1-135-210-11	s	TANTALUM, CHIP 4.7uF 20% 10V
C108	1-162-926-11	s	CERAMIC, CHIP 82PF 5% 50V
C109	1-162-925-11	s	CERAMIC, CHIP 68PF 5% 50V
C111	1-162-907-11	s	CERAMIC, CHIP 2PF 50V
C112	1-162-907-11	s	CERAMIC, CHIP 2PF 50V
C116	1-164-156-11	s	CERAMIC, CHIP 0.1uF 25V
C117	1-164-156-11	s	CERAMIC, CHIP 0.1uF 25V
C118	1-135-210-11	s	TANTALUM, CHIP 4.7uF 20% 10V
C119	1-135-210-11	s	TANTALUM, CHIP 4.7uF 20% 10V
C120	1-162-909-11	s	CERAMIC 4PF 50V
C121	1-164-156-11	s	CERAMIC, CHIP 0.1uF 25V
C123	1-164-156-11	s	CERAMIC, CHIP 0.1uF 25V
C124	1-113-994-11	s	TANTALUM, CHIP 6.8uF 20% 16V
C125	1-115-581-11	s	TANTALUM, CHIP 100uF 20% 16V
C126	1-135-177-21	s	TANTALUM, CHIP 1uF 10% 25V
C127	1-135-177-21	s	TANTALUM, CHIP 1uF 10% 25V

(VA-167 BOARD)

Ref. No. or Q'ty	Part No.	SP	Description
C128	1-164-156-11	s	CERAMIC, CHIP 0.1uF 25V
C129	1-164-156-11	s	CERAMIC, CHIP 0.1uF 25V
C132	1-113-682-11	s	TANTALUM, CHIP 33uF 20% 10V
C134	1-113-994-11	s	TANTALUM, CHIP 6.8uF 20% 16V
C137	1-113-682-11	s	TANTALUM, CHIP 33uF 20% 10V
C138	1-135-190-21	s	TANTALUM, CHIP 0.1uF 10% 20V
C139	1-135-233-21	s	TANTALUM, CHIP 0.33uF 20% 16V
C140	1-135-190-21	s	TANTALUM, CHIP 0.1uF 10% 20V
C141	1-135-233-21	s	TANTALUM, CHIP 0.33uF 20% 16V
C201	1-115-581-11	s	TANTALUM, CHIP 100uF 20% 16V
C202	1-164-156-11	s	CERAMIC, CHIP 0.1uF 25V
C203	1-115-581-11	s	TANTALUM, CHIP 100uF 20% 16V
C204	1-164-156-11	s	CERAMIC, CHIP 0.1uF 25V
C205	1-104-851-11	s	TANTALUM, CHIP 10uF 20% 10V
C206	1-135-210-11	s	TANTALUM, CHIP 4.7uF 20% 10V
C207	1-135-210-11	s	TANTALUM, CHIP 4.7uF 20% 10V
C208	1-162-926-11	s	CERAMIC, CHIP 82PF 5% 50V
C209	1-162-925-11	s	CERAMIC, CHIP 68PF 5% 50V
C211	1-162-907-11	s	CERAMIC, CHIP 2PF 50V
C212	1-162-907-11	s	CERAMIC, CHIP 2PF 50V
C216	1-164-156-11	s	CERAMIC, CHIP 0.1uF 25V
C217	1-164-156-11	s	CERAMIC, CHIP 0.1uF 25V
C218	1-135-210-11	s	TANTALUM, CHIP 4.7uF 20% 10V
C219	1-135-210-11	s	TANTALUM, CHIP 4.7uF 20% 10V
C220	1-162-909-11	s	CERAMIC 4PF 50V
C221	1-164-156-11	s	CERAMIC, CHIP 0.1uF 25V
C223	1-164-156-11	s	CERAMIC, CHIP 0.1uF 25V
C224	1-113-994-11	s	TANTALUM, CHIP 6.8uF 20% 16V
C225	1-115-581-11	s	TANTALUM, CHIP 100uF 20% 16V
C226	1-135-177-21	s	TANTALUM, CHIP 1uF 10% 25V
C227	1-135-177-21	s	TANTALUM, CHIP 1uF 10% 25V
C228	1-164-156-11	s	CERAMIC, CHIP 0.1uF 25V
C229	1-164-156-11	s	CERAMIC, CHIP 0.1uF 25V
C232	1-113-682-11	s	TANTALUM, CHIP 33uF 20% 10V
C234	1-113-994-11	s	TANTALUM, CHIP 6.8uF 20% 16V
C235	1-164-156-11	s	CERAMIC, CHIP 0.1uF 25V
C237	1-113-682-11	s	TANTALUM, CHIP 33uF 20% 10V
C238	1-135-190-21	s	TANTALUM, CHIP 0.1uF 10% 20V
C239	1-135-233-21	s	TANTALUM, CHIP 0.33uF 20% 16V
C240	1-135-190-21	s	TANTALUM, CHIP 0.1uF 10% 20V
C241	1-135-233-21	s	TANTALUM, CHIP 0.33uF 20% 16V
C301	1-113-990-11	s	TANTALUM, CHIP 15uF 20% 16V
C302	1-164-156-11	s	CERAMIC, CHIP 0.1uF 25V
C303	1-113-990-11	s	TANTALUM, CHIP 15uF 20% 16V
C304	1-164-156-11	s	CERAMIC, CHIP 0.1uF 25V
C305	1-104-851-11	s	TANTALUM, CHIP 10uF 20% 10V
C306	1-135-210-11	s	TANTALUM, CHIP 4.7uF 20% 10V
C307	1-135-210-11	s	TANTALUM, CHIP 4.7uF 20% 10V
C308	1-162-926-11	s	CERAMIC, CHIP 82PF 5% 50V
C309	1-162-925-11	s	CERAMIC, CHIP 68PF 5% 50V
C311	1-162-905-11	s	CERAMIC, CHIP 1PF 50V
C312	1-162-905-11	s	CERAMIC, CHIP 1PF 50V
C316	1-164-156-11	s	CERAMIC, CHIP 0.1uF 25V
C317	1-164-156-11	s	CERAMIC, CHIP 0.1uF 25V
C318	1-135-210-11	s	TANTALUM, CHIP 4.7uF 20% 10V
C319	1-135-210-11	s	TANTALUM, CHIP 4.7uF 20% 10V
C320	1-162-909-11	s	CERAMIC 4PF 50V
C321	1-164-156-11	s	CERAMIC, CHIP 0.1uF 25V
C323	1-164-156-11	s	CERAMIC, CHIP 0.1uF 25V

(VA-167 BOARD)

Ref. No. or Q'ty	Part No.	SP	Description
C324	1-113-994-11	s	TANTALUM, CHIP 6.8uF 20% 16V
C325	1-115-581-11	s	TANTALUM, CHIP 100uF 20% 16V
C326	1-135-177-21	s	TANTALUM, CHIP 1uF 10% 25V
C327	1-135-177-21	s	TANTALUM, CHIP 1uF 10% 25V
C328	1-164-156-11	s	CERAMIC, CHIP 0.1uF 25V
C329	1-164-156-11	s	CERAMIC, CHIP 0.1uF 25V
C332	1-113-682-11	s	TANTALUM, CHIP 33uF 20% 10V
C334	1-113-994-11	s	TANTALUM, CHIP 6.8uF 20% 16V
C337	1-113-682-11	s	TANTALUM, CHIP 33uF 20% 10V
C338	1-135-190-21	s	TANTALUM, CHIP 0.1uF 10% 20V
C339	1-135-233-21	s	TANTALUM, CHIP 0.33uF 20% 16V
C340	1-135-190-21	s	TANTALUM, CHIP 0.1uF 10% 20V
C341	1-135-233-21	s	TANTALUM, CHIP 0.33uF 20% 16V
CN1	1-568-361-21	s	CONNECTOR, BOARD TO BOARD 24P
CN2	1-778-552-11	o	CONNECTOR, 30P, MALE
CN3	1-569-607-21	o	CONNECTOR, BOARD TO BOARD 24P
D1	8-719-948-47	s	DIODE HSM88AS
D2	8-719-029-63	s	DIODE RD4.3UH-T1
D3	8-719-029-63	s	DIODE RD4.3UH-T1
D4	8-719-820-41	s	DIODE 1SS302
D5	8-719-820-41	s	DIODE 1SS302
D103	8-719-948-47	s	DIODE HSM88AS
D203	8-719-948-47	s	DIODE HSM88AS
D303	8-719-948-47	s	DIODE HSM88AS
FL101	1-402-639-11	s	FILTER, TRAP
FL102	1-239-620-21	s	FILTER, TRAP
FL201	1-402-639-11	s	FILTER, TRAP
FL202	1-239-620-21	s	FILTER, TRAP
FL301	1-402-639-11	s	FILTER, TRAP
FL302	1-239-620-21	s	FILTER, TRAP
IC1	8-759-970-59	s	IC TLC272CPS
IC2	8-759-111-56	s	IC UPC4572G2
IC3	8-759-234-77	s	IC TC4S66F
IC4	8-759-079-52	s	IC TC74VHC08FS(EL)
IC5	8-759-084-80	s	IC TC7S14F-TE85L
IC6	8-759-180-08	s	IC TC74HC4538AFS
IC7	8-759-175-02	s	IC TL074CPW
IC8	8-759-082-61	s	IC TC4W53FU
IC9	8-759-635-27	s	IC M62352GP
IC10	8-759-059-50	s	IC MB88351PFV
IC11	8-759-086-41	s	IC X24C02S-3.0
IC12	8-759-271-86	s	IC TC7SH04FU
IC16	8-759-066-59	s	IC TC74HC4053AFS
IC17	8-759-175-02	s	IC TL074CPW
IC18	8-759-066-59	s	IC TC74HC4053AFS
IC19	8-759-059-50	s	IC MB88351PFV
IC101	8-759-173-16	s	IC TL062CPW
IC102	8-759-066-59	s	IC TC74HC4053AFS
IC103	8-752-068-64	s	IC CXA1486Q-TH
IC104	8-759-082-61	s	IC TC4W53FU
IC201	8-759-173-16	s	IC TL062CPW
IC202	8-759-066-59	s	IC TC74HC4053AFS
IC203	8-752-068-64	s	IC CXA1486Q-TH
IC204	8-759-082-61	s	IC TC4W53FU
IC301	8-759-173-16	s	IC TL062CPW
IC302	8-759-066-59	s	IC TC74HC4053AFS
IC303	8-752-068-64	s	IC CXA1486Q-TH

(VA-167 BOARD)

Ref. No. or Q'ty	Part No.	SP	Description
IC304	8-759-082-61	s	IC TC4W53FU
L1	1-410-385-11	s	INDUCTOR, CHIP 22uH
L6	1-412-955-11	s	INDUCTOR 22uH
L7	1-412-955-11	s	INDUCTOR 22uH
L8	1-412-955-11	s	INDUCTOR 22uH
L101	1-412-935-11	s	INDUCTOR 0.47uH
L103	1-410-377-31	s	INDUCTOR, CHIP 4.7uH
L104	1-410-377-31	s	INDUCTOR, CHIP 4.7uH
L201	1-412-935-11	s	INDUCTOR 0.47uH
L203	1-410-377-31	s	INDUCTOR, CHIP 4.7uH
L204	1-410-377-31	s	INDUCTOR, CHIP 4.7uH
L301	1-412-935-11	s	INDUCTOR 0.47uH
L303	1-410-377-31	s	INDUCTOR, CHIP 4.7uH
L304	1-410-377-31	s	INDUCTOR, CHIP 4.7uH
Q2	8-729-141-48	s	TRANSISTOR 2SB624-BV345
Q3	8-729-141-75	s	TRANSISTOR 2SD596DV345
Q4	8-729-402-78	s	TRANSISTOR XN6401
Q5	8-729-402-19	s	TRANSISTOR XN6501
Q6	8-729-402-19	s	TRANSISTOR XN6501
Q9	8-729-403-29	s	TRANSISTOR XN6435
Q10	8-729-403-29	s	TRANSISTOR XN6435
Q11	8-729-122-63	s	TRANSISTOR 2SA1226
Q12	8-729-122-63	s	TRANSISTOR 2SA1226
Q13	8-729-122-63	s	TRANSISTOR 2SA1226
Q14	8-729-141-75	s	TRANSISTOR 2SD596DV345
Q101	8-729-117-32	s	TRANSISTOR 2SC4177
Q102	8-729-403-29	s	TRANSISTOR XN6435
Q103	8-729-122-63	s	TRANSISTOR 2SA1226
Q104	8-729-122-63	s	TRANSISTOR 2SA1226
Q105	8-729-403-32	s	TRANSISTOR XN6534
Q106	8-729-403-32	s	TRANSISTOR XN6534
Q109	8-729-117-32	s	TRANSISTOR 2SC4177
Q113	8-729-403-32	s	TRANSISTOR XN6534
Q114	8-729-117-32	s	TRANSISTOR 2SC4177
Q201	8-729-117-32	s	TRANSISTOR 2SC4177
Q202	8-729-403-29	s	TRANSISTOR XN6435
Q203	8-729-122-63	s	TRANSISTOR 2SA1226
Q204	8-729-122-63	s	TRANSISTOR 2SA1226
Q205	8-729-403-32	s	TRANSISTOR XN6534
Q206	8-729-403-32	s	TRANSISTOR XN6534
Q209	8-729-117-32	s	TRANSISTOR 2SC4177
Q213	8-729-403-32	s	TRANSISTOR XN6534
Q214	8-729-117-32	s	TRANSISTOR 2SC4177
Q301	8-729-117-32	s	TRANSISTOR 2SC4177
Q302	8-729-403-29	s	TRANSISTOR XN6435
Q303	8-729-122-63	s	TRANSISTOR 2SA1226
Q304	8-729-122-63	s	TRANSISTOR 2SA1226
Q305	8-729-403-32	s	TRANSISTOR XN6534
Q306	8-729-403-32	s	TRANSISTOR XN6534
Q309	8-729-117-32	s	TRANSISTOR 2SC4177
Q313	8-729-403-32	s	TRANSISTOR XN6534
Q314	8-729-117-32	s	TRANSISTOR 2SC4177
R1	1-218-692-11	s	METAL, CHIP 1K 0.50% 1/16W
R2	1-218-740-11	s	METAL, CHIP 100K 0.50% 1/16W
R3	1-218-702-11	s	METAL, CHIP 2.7K 0.50% 1/16W
R4	1-218-724-11	s	METAL, CHIP 22K 0.50% 1/16W
R5	1-218-701-11	s	METAL, CHIP 2.4K 0.50% 1/16W

(VA-167 BOARD)

Ref. No. or Q'ty	Part No.	SP	Description
R6	1-218-724-11	s	METAL, CHIP 22K 0.50% 1/16W
R7	1-218-716-11	s	METAL, CHIP 10K 0.50% 1/16W
R9	1-218-716-11	s	METAL, CHIP 10K 0.50% 1/16W
R10	1-218-702-11	s	METAL, CHIP 2.7K 0.50% 1/16W
R11	1-218-668-11	s	METAL, CHIP 100 0.50% 1/16W
R12	1-216-857-11	s	METAL, CHIP 1M 5% 1/16W
R13	1-218-740-11	s	METAL, CHIP 100K 0.50% 1/16W
R14	1-218-740-11	s	METAL, CHIP 100K 0.50% 1/16W
R15	1-218-740-11	s	METAL, CHIP 100K 0.50% 1/16W
R16	1-218-716-11	s	METAL, CHIP 10K 0.50% 1/16W
R17	1-218-700-11	s	METAL, CHIP 2.2K 0.50% 1/16W
R18	1-218-708-11	s	METAL, CHIP 4.7K 0.50% 1/16W
R19	1-218-716-11	s	METAL, CHIP 10K 0.50% 1/16W
R20	1-218-716-11	s	METAL, CHIP 10K 0.50% 1/16W
R21	1-218-740-11	s	METAL, CHIP 100K 0.50% 1/16W
R22	1-218-740-11	s	METAL, CHIP 100K 0.50% 1/16W
R23	1-216-857-11	s	METAL, CHIP 1M 5% 1/16W
R24	1-218-716-11	s	METAL, CHIP 10K 0.50% 1/16W
R25	1-218-700-11	s	METAL, CHIP 2.2K 0.50% 1/16W
R26	1-218-692-11	s	METAL, CHIP 1K 0.50% 1/16W
R27	1-218-716-11	s	METAL, CHIP 10K 0.50% 1/16W
R28	1-218-714-11	s	METAL, CHIP 8.2K 0.50% 1/16W
R29	1-218-716-11	s	METAL, CHIP 10K 0.50% 1/16W
R30	1-218-700-11	s	METAL, CHIP 2.2K 0.50% 1/16W
R31	1-218-716-11	s	METAL, CHIP 10K 0.50% 1/16W
R32	1-218-752-11	s	METAL, CHIP 330K 0.50% 1/16W
R33	1-218-752-11	s	METAL, CHIP 330K 0.50% 1/16W
R34	1-218-752-11	s	METAL, CHIP 330K 0.50% 1/16W
R35	1-218-716-11	s	METAL, CHIP 10K 0.50% 1/16W
R36	1-218-710-11	s	METAL, CHIP 5.6K 0.50% 1/16W
R37	1-218-706-11	s	METAL, CHIP 3.9K 0.50% 1/16W
R38	1-218-710-11	s	METAL, CHIP 5.6K 0.50% 1/16W
R39	1-218-706-11	s	METAL, CHIP 3.9K 0.50% 1/16W
R40	1-218-710-11	s	METAL, CHIP 5.6K 0.50% 1/16W
R41	1-218-706-11	s	METAL, CHIP 3.9K 0.50% 1/16W
R42	1-218-716-11	s	METAL, CHIP 10K 0.50% 1/16W
R43	1-218-724-11	s	METAL, CHIP 22K 0.50% 1/16W
R44	1-218-716-11	s	METAL, CHIP 10K 0.50% 1/16W
R45	1-218-708-11	s	METAL, CHIP 4.7K 0.50% 1/16W
R46	1-218-703-11	s	METAL, CHIP 3K 0.50% 1/16W
R47	1-218-740-11	s	METAL, CHIP 100K 0.50% 1/16W
R48	1-218-740-11	s	METAL, CHIP 100K 0.50% 1/16W
R49	1-218-728-11	s	METAL, CHIP 33K 0.50% 1/16W
R50	1-218-740-11	s	METAL, CHIP 100K 0.50% 1/16W
R51	1-218-740-11	s	METAL, CHIP 100K 0.50% 1/16W
R53	1-218-689-11	s	METAL, CHIP 750 0.50% 1/16W
R57	1-218-696-11	s	METAL, CHIP 1.5K 0.50% 1/16W
R58	1-218-644-11	s	METAL, CHIP 10 0.50% 1/16W
R59	1-218-644-11	s	METAL, CHIP 10 0.50% 1/16W
R60	1-218-696-11	s	METAL, CHIP 1.5K 0.50% 1/16W
R61	1-218-644-11	s	METAL, CHIP 10 0.50% 1/16W
R62	1-218-644-11	s	METAL, CHIP 10 0.50% 1/16W
R63	1-218-696-11	s	METAL, CHIP 1.5K 0.50% 1/16W
R64	1-218-644-11	s	METAL, CHIP 10 0.50% 1/16W
R65	1-218-644-11	s	METAL, CHIP 10 0.50% 1/16W
R66	1-218-668-11	s	METAL, CHIP 100 0.50% 1/16W
R67	1-218-724-11	s	METAL, CHIP 22K 0.50% 1/16W
R68	1-218-728-11	s	METAL, CHIP 33K 0.50% 1/16W
R69	1-218-724-11	s	METAL, CHIP 22K 0.50% 1/16W

(VA-167 BOARD)

Ref. No. or Q'ty	Part No.	SP	Description
R70	1-218-728-11	s	METAL, CHIP 33K 0.50% 1/16W
R71	1-218-724-11	s	METAL, CHIP 22K 0.50% 1/16W
R72	1-218-728-11	s	METAL, CHIP 33K 0.50% 1/16W
R73	1-218-668-11	s	METAL, CHIP 100 0.50% 1/16W
R74	1-218-740-11	s	METAL, CHIP 100K 0.50% 1/16W
R76	1-218-696-11	s	METAL, CHIP 1.5K 0.50% 1/16W
R77	1-218-696-11	s	METAL, CHIP 1.5K 0.50% 1/16W
R78	1-218-716-11	s	METAL, CHIP 10K 0.50% 1/16W
R79	1-218-716-11	s	METAL, CHIP 10K 0.50% 1/16W
R80	1-218-740-11	s	METAL, CHIP 100K 0.50% 1/16W
R81	1-218-696-11	s	METAL, CHIP 1.5K 0.50% 1/16W
R82	1-218-696-11	s	METAL, CHIP 1.5K 0.50% 1/16W
R83	1-218-696-11	s	METAL, CHIP 1.5K 0.50% 1/16W
R101	1-218-652-11	s	METAL, CHIP 22 0.50% 1/16W
R102	1-218-700-11	s	METAL, CHIP 2.2K 0.50% 1/16W
R103	1-218-668-11	s	METAL, CHIP 100 0.50% 1/16W
R104	1-218-728-11	s	METAL, CHIP 33K 0.50% 1/16W
R105	1-218-692-11	s	METAL, CHIP 1K 0.50% 1/16W
R106	1-218-696-11	s	METAL, CHIP 1.5K 0.50% 1/16W
R107	1-218-692-11	s	METAL, CHIP 1K 0.50% 1/16W
R108	1-218-712-11	s	METAL, CHIP 6.8K 0.50% 1/16W
R109	1-218-710-11	s	METAL, CHIP 5.6K 0.50% 1/16W
R110	1-218-710-11	s	METAL, CHIP 5.6K 0.50% 1/16W
R111	1-218-751-11	s	METAL, CHIP 300K 0.50% 1/16W
R112	1-218-709-11	s	METAL, CHIP 5.1K 0.50% 1/16W
R113	1-218-724-11	s	METAL, CHIP 22K 0.50% 1/16W
R114	1-218-690-11	s	METAL, CHIP 820 0.50% 1/16W
R115	1-218-690-11	s	METAL, CHIP 820 0.50% 1/16W
R116	1-218-730-11	s	METAL, CHIP 39K 0.50% 1/16W
R117	1-218-730-11	s	METAL, CHIP 39K 0.50% 1/16W
R118	1-216-864-11	s	METAL, CHIP 0 5% 1/16W
R119	1-216-864-11	s	METAL, CHIP 0 5% 1/16W
R120	1-218-660-11	s	METAL, CHIP 47 0.50% 1/16W
R121	1-218-710-11	s	METAL, CHIP 5.6K 0.50% 1/16W
R122	1-216-125-00	s	METAL, CHIP 1.5M 5% 1/10W
R124	1-218-699-11	s	METAL, CHIP 2K 0.50% 1/16W
R125	1-218-706-11	s	METAL, CHIP 3.9K 0.50% 1/16W
R126	1-218-706-11	s	METAL, CHIP 3.9K 0.50% 1/16W
R127	1-218-736-11	s	METAL, CHIP 68K 0.50% 1/16W
R128	1-218-706-11	s	METAL, CHIP 3.9K 0.50% 1/16W
R129	1-218-700-11	s	METAL, CHIP 2.2K 0.50% 1/16W
R130	1-218-696-11	s	METAL, CHIP 1.5K 0.50% 1/16W
R131	1-218-710-11	s	METAL, CHIP 5.6K 0.50% 1/16W
R132	1-218-740-11	s	METAL, CHIP 100K 0.50% 1/16W
R133	1-218-716-11	s	METAL, CHIP 10K 0.50% 1/16W
R134	1-218-732-11	s	METAL, CHIP 47K 0.50% 1/16W
R135	1-218-728-11	s	METAL, CHIP 33K 0.50% 1/16W
R136	1-218-708-11	s	METAL, CHIP 4.7K 0.50% 1/16W
R137	1-218-723-11	s	METAL, CHIP 20K 0.50% 1/16W
R138	1-218-644-11	s	METAL, CHIP 10 0.50% 1/16W
R139	1-218-714-11	s	METAL, CHIP 8.2K 0.50% 1/16W
R150	1-218-712-11	s	METAL, CHIP 6.8K 0.50% 1/16W
R151	1-218-706-11	s	METAL, CHIP 3.9K 0.50% 1/16W
R152	1-218-704-11	s	METAL, CHIP 3.3K 0.50% 1/16W
R153	1-218-660-11	s	METAL, CHIP 47 0.50% 1/16W
R154	1-218-668-11	s	METAL, CHIP 100 0.50% 1/16W
R155	1-218-710-11	s	METAL, CHIP 5.6K 0.50% 1/16W
R156	1-218-692-11	s	METAL, CHIP 1K 0.50% 1/16W
R157	1-218-727-11	s	METAL, CHIP 30K 0.50% 1/16W

(VA-167 BOARD)

Ref. No. or Q'ty	Part No.	SP	Description
R158	1-218-720-11	s	METAL, CHIP 15K 0.50% 1/16W
R159	1-218-703-11	s	METAL, CHIP 3K 0.50% 1/16W
R160	1-218-725-11	s	METAL, CHIP 24K 0.50% 1/16W
R161	1-218-692-11	s	METAL, CHIP 1K 0.50% 1/16W
R163	1-218-652-11	s	METAL, CHIP 22 0.50% 1/16W
R164	1-218-652-11	s	METAL, CHIP 22 0.50% 1/16W
R165	1-218-700-11	s	METAL, CHIP 2.2K 0.50% 1/16W
R166	1-218-700-11	s	METAL, CHIP 2.2K 0.50% 1/16W
R167	1-218-689-11	s	METAL, CHIP 750 0.50% 1/16W
R168	1-218-710-11	s	METAL, CHIP 5.6K 0.50% 1/16W
R201	1-218-652-11	s	METAL, CHIP 22 0.50% 1/16W
R202	1-218-700-11	s	METAL, CHIP 2.2K 0.50% 1/16W
R203	1-218-668-11	s	METAL, CHIP 100 0.50% 1/16W
R204	1-218-728-11	s	METAL, CHIP 33K 0.50% 1/16W
R205	1-218-692-11	s	METAL, CHIP 1K 0.50% 1/16W
R206	1-218-696-11	s	METAL, CHIP 1.5K 0.50% 1/16W
R207	1-218-698-11	s	METAL, CHIP 1.8K 0.50% 1/16W
R208	1-218-712-11	s	METAL, CHIP 6.8K 0.50% 1/16W
R209	1-218-710-11	s	METAL, CHIP 5.6K 0.50% 1/16W
R210	1-218-710-11	s	METAL, CHIP 5.6K 0.50% 1/16W
R211	1-218-751-11	s	METAL, CHIP 300K 0.50% 1/16W
R212	1-218-709-11	s	METAL, CHIP 5.1K 0.50% 1/16W
R213	1-218-724-11	s	METAL, CHIP 22K 0.50% 1/16W
R214	1-218-690-11	s	METAL, CHIP 820 0.50% 1/16W
R215	1-218-690-11	s	METAL, CHIP 820 0.50% 1/16W
R216	1-218-730-11	s	METAL, CHIP 39K 0.50% 1/16W
R217	1-218-730-11	s	METAL, CHIP 39K 0.50% 1/16W
R218	1-216-864-11	s	METAL, CHIP 0 5% 1/16W
R219	1-216-864-11	s	METAL, CHIP 0 5% 1/16W
R220	1-218-660-11	s	METAL, CHIP 47 0.50% 1/16W
R221	1-218-710-11	s	METAL, CHIP 5.6K 0.50% 1/16W
R222	1-216-123-11	s	METAL, CHIP 1.2M 5% 1/10W
R224	1-218-699-11	s	METAL, CHIP 2K 0.50% 1/16W
R225	1-218-706-11	s	METAL, CHIP 3.9K 0.50% 1/16W
R226	1-218-706-11	s	METAL, CHIP 3.9K 0.50% 1/16W
R227	1-218-736-11	s	METAL, CHIP 68K 0.50% 1/16W
R228	1-218-706-11	s	METAL, CHIP 3.9K 0.50% 1/16W
R229	1-218-700-11	s	METAL, CHIP 2.2K 0.50% 1/16W
R230	1-218-696-11	s	METAL, CHIP 1.5K 0.50% 1/16W
R231	1-218-710-11	s	METAL, CHIP 5.6K 0.50% 1/16W
R232	1-218-740-11	s	METAL, CHIP 100K 0.50% 1/16W
R233	1-218-716-11	s	METAL, CHIP 10K 0.50% 1/16W
R234	1-218-732-11	s	METAL, CHIP 47K 0.50% 1/16W
R235	1-218-728-11	s	METAL, CHIP 33K 0.50% 1/16W
R236	1-218-708-11	s	METAL, CHIP 4.7K 0.50% 1/16W
R237	1-218-723-11	s	METAL, CHIP 20K 0.50% 1/16W
R238	1-218-644-11	s	METAL, CHIP 10 0.50% 1/16W
R239	1-218-714-11	s	METAL, CHIP 8.2K 0.50% 1/16W
R250	1-218-712-11	s	METAL, CHIP 6.8K 0.50% 1/16W
R251	1-218-706-11	s	METAL, CHIP 3.9K 0.50% 1/16W
R252	1-218-704-11	s	METAL, CHIP 3.3K 0.50% 1/16W
R253	1-218-660-11	s	METAL, CHIP 47 0.50% 1/16W
R254	1-218-668-11	s	METAL, CHIP 100 0.50% 1/16W
R255	1-218-710-11	s	METAL, CHIP 5.6K 0.50% 1/16W
R256	1-218-692-11	s	METAL, CHIP 1K 0.50% 1/16W
R257	1-218-727-11	s	METAL, CHIP 30K 0.50% 1/16W
R258	1-218-720-11	s	METAL, CHIP 15K 0.50% 1/16W
R259	1-218-703-11	s	METAL, CHIP 3K 0.50% 1/16W
R260	1-218-725-11	s	METAL, CHIP 24K 0.50% 1/16W

(VA-167 BOARD)

Ref. No. or Q'ty	Part No.	SP	Description
R261	1-218-692-11	s	METAL, CHIP 1K 0.50% 1/16W
R263	1-218-652-11	s	METAL, CHIP 22 0.50% 1/16W
R264	1-218-652-11	s	METAL, CHIP 22 0.50% 1/16W
R265	1-218-700-11	s	METAL, CHIP 2.2K 0.50% 1/16W
R266	1-218-700-11	s	METAL, CHIP 2.2K 0.50% 1/16W
R267	1-218-689-11	s	METAL, CHIP 750 0.50% 1/16W
R268	1-218-710-11	s	METAL, CHIP 5.6K 0.50% 1/16W
R301	1-218-652-11	s	METAL, CHIP 22 0.50% 1/16W
R302	1-218-700-11	s	METAL, CHIP 2.2K 0.50% 1/16W
R303	1-218-668-11	s	METAL, CHIP 100 0.50% 1/16W
R304	1-218-728-11	s	METAL, CHIP 33K 0.50% 1/16W
R305	1-218-692-11	s	METAL, CHIP 1K 0.50% 1/16W
R306	1-218-694-11	s	METAL, CHIP 1.2K 0.50% 1/16W
R307	1-218-690-11	s	METAL, CHIP 820 0.50% 1/16W
R308	1-218-712-11	s	METAL, CHIP 6.8K 0.50% 1/16W
R309	1-218-710-11	s	METAL, CHIP 5.6K 0.50% 1/16W
R310	1-218-710-11	s	METAL, CHIP 5.6K 0.50% 1/16W
R311	1-218-749-11	s	METAL, CHIP 240K 0.50% 1/16W
R312	1-218-719-11	s	METAL, CHIP 13K 0.50% 1/16W
R313	1-218-726-11	s	METAL, CHIP 27K 0.50% 1/16W
R314	1-218-690-11	s	METAL, CHIP 820 0.50% 1/16W
R315	1-218-690-11	s	METAL, CHIP 820 0.50% 1/16W
R316	1-218-730-11	s	METAL, CHIP 39K 0.50% 1/16W
R317	1-218-730-11	s	METAL, CHIP 39K 0.50% 1/16W
R318	1-216-864-11	s	METAL, CHIP 0 5% 1/16W
R319	1-216-864-11	s	METAL, CHIP 0 5% 1/16W
R320	1-218-660-11	s	METAL, CHIP 47 0.50% 1/16W
R321	1-218-710-11	s	METAL, CHIP 5.6K 0.50% 1/16W
R322	1-216-129-00	s	METAL, CHIP 2.2M 5% 1/10W
R324	1-218-706-11	s	METAL, CHIP 3.9K 0.50% 1/16W
R325	1-218-706-11	s	METAL, CHIP 3.9K 0.50% 1/16W
R326	1-218-706-11	s	METAL, CHIP 3.9K 0.50% 1/16W
R327	1-218-736-11	s	METAL, CHIP 68K 0.50% 1/16W
R328	1-218-706-11	s	METAL, CHIP 3.9K 0.50% 1/16W
R329	1-218-700-11	s	METAL, CHIP 2.2K 0.50% 1/16W
R330	1-218-696-11	s	METAL, CHIP 1.5K 0.50% 1/16W
R331	1-218-710-11	s	METAL, CHIP 5.6K 0.50% 1/16W
R332	1-218-740-11	s	METAL, CHIP 100K 0.50% 1/16W
R333	1-218-716-11	s	METAL, CHIP 10K 0.50% 1/16W
R334	1-218-732-11	s	METAL, CHIP 47K 0.50% 1/16W
R335	1-218-728-11	s	METAL, CHIP 33K 0.50% 1/16W
R336	1-218-708-11	s	METAL, CHIP 4.7K 0.50% 1/16W
R337	1-218-723-11	s	METAL, CHIP 20K 0.50% 1/16W
R338	1-218-644-11	s	METAL, CHIP 10 0.50% 1/16W
R339	1-218-714-11	s	METAL, CHIP 8.2K 0.50% 1/16W
R350	1-218-712-11	s	METAL, CHIP 6.8K 0.50% 1/16W
R351	1-218-706-11	s	METAL, CHIP 3.9K 0.50% 1/16W
R352	1-218-704-11	s	METAL, CHIP 3.3K 0.50% 1/16W
R353	1-218-660-11	s	METAL, CHIP 47 0.50% 1/16W
R354	1-218-668-11	s	METAL, CHIP 100 0.50% 1/16W
R355	1-218-710-11	s	METAL, CHIP 5.6K 0.50% 1/16W
R356	1-218-692-11	s	METAL, CHIP 1K 0.50% 1/16W
R357	1-218-727-11	s	METAL, CHIP 30K 0.50% 1/16W
R358	1-218-720-11	s	METAL, CHIP 15K 0.50% 1/16W
R359	1-218-703-11	s	METAL, CHIP 3K 0.50% 1/16W
R360	1-218-725-11	s	METAL, CHIP 24K 0.50% 1/16W
R361	1-218-692-11	s	METAL, CHIP 1K 0.50% 1/16W
R363	1-218-652-11	s	METAL, CHIP 22 0.50% 1/16W
R364	1-218-652-11	s	METAL, CHIP 22 0.50% 1/16W

(VA-167 BOARD)

Ref. No. or Q'ty	Part No.	SP	Description
R365	1-218-700-11	s	METAL, CHIP 2.2K 0.50% 1/16W
R366	1-218-700-11	s	METAL, CHIP 2.2K 0.50% 1/16W
R367	1-218-689-11	s	METAL, CHIP 750 0.50% 1/16W
R368	1-218-710-11	s	METAL, CHIP 5.6K 0.50% 1/16W
RV101	1-237-035-11	s	RES, ADJ METAL 5K
RV201	1-237-035-11	s	RES, ADJ METAL 5K
RV301	1-237-034-11	s	RES, ADJ METAL 2K

FRAME *DNV-5 only

Ref. No. or Q'ty	Part No.	SP	Description
1pc	1-504-860-21	s	SPEAKER (2.8MC)
1pc	1-541-638-32	s	MOTOR, DC FAN
1pc	1-698-003-11	o	MOTOR, DC (SHREADING)
1pc	1-766-377-12	s	CONNECTOR, BATTERY
1pc	1-810-599-11	s	SENSOR, DEW CONDENSATION
1pc	8-825-770-74	s	HEAD, FE EF291-21
1pc	8-825-779-61	s	HEAD, AU PS244-2103L
1pc	8-825-779-71	s	HEAD, CTL PS244-21D
1pc	8-835-553-01	s	MOTOR, DC (CAPSTAN)
2pcs	1-777-371-11	o	WIRE, FLEXIBLE CARD 30P (CN22/MB-627 board to CN102/TC-80 board) (CN23/MB-627 board to CN101/TC-80 board)
1pc	1-777-443-11	s	WIRE, FLEXIBLE CARD 45P (CN1/CI-12 board to CN53/MB-627 board)

HARNESS (50 PIN CN)
(CN106/CAMERA connector to CN1/PA-203 board, CN34 and CN35/MB-627 board and CN2/CT-185 board)

1pc	1-956-532-12	o	HARNESS, 50 PIN CN
CN1	1-565-978-11	o	HOUSING 6P
5pcs	1-766-387-11	o	CONTACT, FEMALE AWG28-26
CN2	1-562-254-00	o	HOUSING, 4P
FB	1-543-157-11	s	BEAD, FERRITE
4pcs	1-562-260-11	o	CONTACT, SOCKET
CN34	1-778-550-11	o	HOUSING, 30P
19pcs	1-778-554-11	o	CONTACT, FEMALE AWG28-30
CN35	1-778-549-11	o	HOUSING, 20P
7pcs	1-778-554-11	o	CONTACT, FEMALE AWG28-30
CN106	1-563-907-11	s	HOUSING, 50P
11pcs	1-563-910-31	o	CONTACT, FEMALE AWG22-24
24pcs	1-563-910-41	o	CONTACT, FEMALE AWG26-28

HARNESS (BATT-CNB104)
(DC-87 board to CN104/CNB-1 board)

CN104	1-562-256-00	o	HOUSING, 6P
6pcs	1-562-260-11	o	CONTACT, SOCKET

HARNESS (BATTINT-MB50)
(DC-87 board to CN50/MB-627 board)

CN50	1-569-618-11	o	HOUSING, 3P

HARNESS (CAP1-MDC502)
(CAPSTAN motor to CN502/MDC-5 board)

CAPSTAN	1-695-214-11	o	HOUSING, 15P
15pcs	1-695-215-11	o	CONTACT, FEMALE 1P AWG26-30
CN502	1-695-214-11	o	HOUSING, 15P
15pcs	1-695-215-11	o	CONTACT, FEMALE 1P AWG26-30

HARNESS (CNB108-IO1)
(CN108/CNB-1 board to CN1/IO-117 board)

1pc	1-956-448-11	o	HARNESS, CNB108-IO1

HARNESS (CNB-CT1)
(CNB-1 board to CN1/CT-185 board)

CN1	1-562-255-11	o	HOUSING, 5P

HARNESS (CO1-CNB107)
(CN1/CO-22 board to CN107/CNB-1 board)

1pc	1-956-449-11	o	HARNESS, CO1-CNB107

HARNESS (CUE/TCHEAD-HN2)
(CN2/HN-224 board to CUE/TC HEAD)

CN2	1-569-619-11	o	HOUSING, 4P

(FRAME)

Ref. No. or Q'ty	Part No.	SP	Description
HARNESS (DC OUT-CNB103)			
(CN103/CNB-1 board to CN105/DC OUT 12V connector)			
CN103	1-562-252-00	o	HOUSING, 2P
2pcs	1-562-260-11	o	CONTACT, SOCKET
CN105	1-565-072-11	s	CONNECTOR, CIRCULAR 4P, FEMALE
HARNESS (EX DC-CNB102)			
(DC-88 board to CN102/CNB-1 board)			
CN102	1-580-696-11	o	HOUSING, 9P
9pcs	1-562-260-11	o	CONTACT, SOCKET
HARNESS (FE/CTL-MDC505)			
(FULL ERASE HEAD to CN505/MDC-5 board)			
CN505	1-569-619-11	o	HOUSING, 4P
HARNESS (HP1-TC503)			
(CN1/HP-70 board to CN503/TC-80 board)			
1pc	1-956-452-11	o	HARNESS, HP1-TC503
HARNESS (KY150-MB30)			
(CN150/KY-293 board to CN30/MB-627 board)			
1pc	1-956-457-12	o	HARNESS, KY150-MB30
HARNESS (LIGHT/MB32-PS1)			
(CN105/LIGHT connector and CN32/MB-627 board to CN102/PS-390 board)			
1pc	1-956-539-11	o	HARNESS, LIGHT/MB32-PS1
FB	1-543-157-11	s	BEAD, FERRITE
CN102	1-562-256-00	o	HOUSING, 6P
6pcs	1-562-260-11	o	CONTACT, SOCKET
CN32	1-569-617-11	o	HOUSING, 2P
2pcs	1-766-387-11	o	CONTACT, FEMALE AWG28-26
HARNESS (MB27-SW2/PWS1)			
(CN27/MB-627 board to CN2/SW-873 board and CN1/PSW-55 board)			
CN2	1-569-618-11	o	HOUSING, 3P
CN27	1-569-619-11	o	HOUSING, 4P
HARNESS (MDR3-MDC503)			
(CN3/MDR-1 board to CN503/MDC-5 board)			
1pc	1-956-451-11	o	HARNESS, MDR3-MDC503
HARNESS (MDR4-MDC504)			
(CN4/MDR-1 board to CN504/MDC-5 board)			
1pc	1-956-450-11	o	HARNESS, MDR4-MDC504
HARNESS (PA125-MB25)			
(CN125/PA-203 board to CN25/MB-627 board)			
1pc	1-956-537-12	o	HARNESS, PA125-MB25
CN125	1-569-620-11	o	HOUSING, 5P
HARNESS (PS101-CNB105)			
(CN101/PS-390 board to CN105/CNB-1 board)			
CN101	1-562-254-00	o	HOUSING, 4P
4pcs	1-562-260-11	o	CONTACT, SOCKET
CN105	1-562-254-00	o	HOUSING, 4P
4pcs	1-562-260-11	o	CONTACT, SOCKET
HARNESS (REMOTE)			
(CN102/REMOTE connector to CN31/MB-627 board)			
CN102	1-561-233-21	s	CONNECTOR, 6P, FEMALE
CN31	1-565-978-11	o	HOUSING 6P
HARNESS (RX101-MB52)			
(CN101/RX-26 board to CN52/MB-627 board)			
1pc	1-956-458-11	o	HARNESS, RX101-MB52

(FRAME)

Ref. No. or Q'ty	Part No.	SP	Description
HARNESS (SW1-MB51)			
(CN101/LP-102 board to CN51/MB-627 board)			
HARNESS (SW1-TC901)			
(CN1/SW-873 board to CN901/TC-80 board)			
1pc	1-956-534-11	o	HARNESS, SW1-TC901
CN1	1-569-620-11	o	HOUSING, 5P
HARNESS (SW701-MB33)			
(CN701/SW-882 board and CN133/PA-203 board to CN33/MB-627 board)			
CN33	1-565-132-11	o	HOUSING, 13P
6pcs	1-565-164-21	o	CONTACT, FEMALE AWG28-26
CN701	1-569-619-11	o	HOUSING, 4P
HARNESS (TAPE SENSOR)			
(TAPE TOP SENSOR to CN508/MDC-5 board)			
(TAPE END SENSOR to CN509/MDC-5 board)			
(FULL TOP SENSOR to CN512/MDC-5 board)			
SENSOR	1-543-316-21	s	HEAD, SENSING (SMALL TYPE)
HARNESS (TC7-SPK)			
(CN504/TC-80 board to SPEAKER)			
1pc	1-953-418-11	o	HARNESS, TC7-SPK
HARNESS (TM-MDC501)			
(LOADING motor to CN501/MDC-5 board)			

```
-----
FRAME  *DNW-7/7P/90/90P/90WS/90WSP only
-----
Ref. No.
or Q'ty  Part No.    SP Description

1pc      1-503-293-00 s SPEAKER
1pc      1-541-638-32 s MOTOR, DC FAN
1pc      1-547-259-11 o FILTER UNIT, OPTICAL
1pc      1-698-003-11 o MOTOR, DC (SHREADING)
1pc      1-766-377-12 s CONNECTOR, BATTERY

1pc      1-810-599-11 s SENSOR, DEW CONDENSATION

1pc      8-825-770-74 s HEAD, FE EF291-21
1pc      8-825-779-61 s HEAD, AU PS244-2103L
1pc      8-825-779-71 s HEAD, CTL PS244-21D
1pc      8-835-553-01 s MOTOR, DC (CAPSTAN)

2pcs     1-777-371-11 o WIRE, FLEXIBLE CARD 30P
         (CN22/MB-627 board to CN102/TC-80 board)
         (CN23/MB-627 board to CN101/TC-80 board)
1pc      1-777-443-11 s WIRE, FLEXIBLE CARD 45P
         (CN1/CI-12 board to CN53/MB-627 board)

HARNESS (AIF33-PSW1)
(CN33/AIF-8 board to CN1/PSW-33 board)
 CN1     1-569-680-11 o HOUSING, 2P

HARNESS (AIF136-MB33)
(CN136/AIF-8 board to CN33/MB-627 board)
 CN33    1-565-132-11 o HOUSING, 13P
  13pcs  1-565-164-21 o CONTACT, FEMALE AWG28-26
 CN136   1-565-132-11 o HOUSING, 13P
  13pcs  1-565-164-21 o CONTACT, FEMALE AWG28-26

HARNESS (AIF137-MB25)
(CN137/AIF-8 board to CN25/MB-627 board)
1pc      1-956-456-11 o HARNESS, AIF137-MB25

HARNESS (BATT-CNB104)
(DC-87 board to CN104/CNB-1 board)
 CN104   1-562-256-00 o HOUSING, 6P
  6pcs   1-562-260-11 o CONTACT, SOCKET

HARNESS (BATTINT-MB50)
(DC-87 board to CN50/MB-627 board)
 CN50    1-569-618-11 o HOUSING, 3P

HARNESS (BC1-MB35)
(CN1/BC-25 board to CN35/MB-627 board)
 CN1     1-778-549-11 o HOUSING, 20P
  20pcs  1-778-554-11 o CONTACT, FEMALE AWG28-30
 CN35    1-778-549-11 o HOUSING, 20P
  20pcs  1-778-554-11 o CONTACT, FEMALE AWG28-30

HARNESS (BI)
(CN2/BI-96(B) board to CN1/PA-186 board)
(CN2/BI-96(G) board to CN2/PA-186 board)
(CN2/BI-96(R) board to CN3/PA-186 board)
 BI      1-562-735-11 s HOUSING, 2P
 PA      1-569-195-11 o HOUSING, 2P
  2pcs   1-563-088-11 o CONTACT, FEMALE AWG24-30

HARNESS (CAP1-MDC502)
(CAPSTAN motor to CN502/MDC-5 board)
 CAPSTAN 1-695-214-11 o HOUSING, 15P
  15pcs  1-695-215-11 o CONTACT, FEMALE 1P AWG26-30
 CN502   1-695-214-11 o HOUSING, 15P
  15pcs  1-695-215-11 o CONTACT, FEMALE 1P AWG26-30

HARNESS (CNB108-IO1)
(CN108/CNB-1 board to CN1/IO-117 board)
1pc      1-956-448-11 o HARNESS, CNB108-IO1
```

(FRAME)

```
Ref. No.
or Q'ty  Part No.    SP Description

HARNESS (CO1-CNB107)
(CN1/CO-22 board to CN107/CNB-1 board)
1pc      1-956-449-11 o HARNESS, CO1-CNB107

HARNESS (CUE/TCHEAD-HN2)
(CN2/HN-224 board to CUE/TC HEAD)
 CN2     1-569-619-11 o HOUSING, 4P

HARNESS (DC OUT-CNB103)
(CN103/CNB-1 board to CN105/DC OUT 12V connector)
 CN103   1-562-252-00 o HOUSING, 2P
  2pcs   1-562-260-11 o CONTACT, SOCKET
 CN105   1-565-072-11 s CONNECTOR, CIRCULAR 4P, FEMALE

HARNESS (DR2-MB26)
(CN2/DR-291 board to CN26/MB-627 board)
1pc      1-956-460-11 o HARNESS, DR2-MB26

HARNESS (EX DC-CNB102)
(DC-88 board to CN102/CNB-1 board)
 CN102   1-580-696-11 o HOUSING, 9P
  9pcs   1-562-260-11 o CONTACT, SOCKET

HARNESS (FE/CTL-MDC505)
(FULL ERASE HEAD to CN505/MDC-5 board)
 CN505   1-569-619-11 o HOUSING, 4P

HARNESS (HP1-TC503)
(CN1/HP-70 board to CN503/TC-80 board)
1pc      1-956-452-11 o HARNESS, HP1-TC503

HARNESS (KY150-MB30)
(CN150/KY-293 board to CN30/MB-627 board)
1pc      1-956-457-12 o HARNESS, KY150-MB30

HARNESS (LENS)
(CN104/LENS connector to CN300/AIF-8 board)
 CN104   1-562-221-21 s CONNECTOR, 12P, FEMALE
 CN300   1-580-584-11 o HOUSING, 16P
  12pcs  1-580-599-11 o TERMINAL, SOLDERLESS

HARNESS (LP101-MB51)
(CN101/LP-86 board to CN51/MB-627 board)
1pc      1-956-459-11 o HARNESS, LP101-MB51

HARNESS (MA10-AIF100)
(CN10/MA-68 board to CN100/AIF-8 board)
1pc      1-956-454-11 o HARNESS, MA10-AIF100

HARNESS (MDR3-MDC503)
(CN3/MDR-1 board to CN503/MDC-5 board)
1pc      1-956-451-11 o HARNESS, MDR3-MDC503

HARNESS (MDR4-MDC504)
(CN4/MDR-1 board to CN504/MDC-5 board)
1pc      1-956-450-11 o HARNESS, MDR4-MDC504

HARNESS (PS101-CNB105)
(CN101/PS-390 board to CN105/CNB-1 board)
 CN101   1-562-254-00 o HOUSING, 4P
  4pcs   1-562-260-11 o CONTACT, SOCKET
 CN105   1-562-254-00 o HOUSING, 4P
  4pcs   1-562-260-11 o CONTACT, SOCKET
```

(FRAME)

Ref. No. or Q'ty	Part No.	SP	Description
HARNESS (PS102-LIGHT/PS1)			
(CN102/PS-390 board to CN1/SW-823 board and LIGHT connector)			
1pc	1-956-433-11	o	HARNESS, PS102-LIGHT/PS1
FB	1-543-157-11	s	BEAD, FERRITE
CN1	1-562-252-00	o	HOUSING, 2P
2pcs	1-562-260-11	o	CONTACT, SOCKET
CN102	1-562-256-00	o	HOUSING, 6P
6pcs	1-562-260-11	o	CONTACT, SOCKET
HARNESS (REMOTE)			
(CN102/REMOTE connector to CN31/MB-627 board)			
CN102	1-561-233-21	s	CONNECTOR, 6P, FEMALE
CN31	1-565-978-11	o	HOUSING 6P
HARNESS (RX101-MB52)			
(CN101/RX-26 board to CN52/MB-627 board)			
1pc	1-956-458-11	o	HARNESS, RX101-MB52
HARNESS (SW3-MB32)			
(CN3/SW-823 board to CN32/MB-627 board)			
1pc	1-956-455-11	o	HARNESS, SW3-MB32
HARNESS (SW701-SW701)			
(CN701/SW-789 board to CN701/SW-808 board)			
1pc	1-956-461-11	o	HARNESS, SW701-SW701
HARNESS (TAPE SENSOR)			
(TAPE TOP SENSOR to CN508/MDC-5 board)			
(TAPE END SENSOR to CN509/MDC-5 board)			
(FULL TOP SENSOR to CN512/MDC-5 board)			
SENSOR	1-543-316-21	s	HEAD, SENSING (SMALL TYPE)
HARNESS (TC7-SPK)			
(CN504/TC-80 board to SPEAKER)			
1pc	1-953-418-11	o	HARNESS, TC7-SPK
HARNESS (TC901-SW18)			
(CN901/TC-80 board to CN18/SW-780 board)			
1pc	1-956-453-11	o	HARNESS, TC901-SW18
HARNESS (TM-MDC501)			
(LOADING motor to CN501/MDC-5 board)			
HARNESS (VA2-MB34)			
(CN2/VA-167 board to CN34/MB-627 board)			
CN2	1-778-550-11	o	HOUSING, 30P
30pcs	1-778-554-11	o	CONTACT, FEMALE AWG28-30
CN34	1-778-550-11	o	HOUSING, 30P
30pcs	1-778-554-11	o	CONTACT, FEMALE AWG28-30
HARNESS (VF)			
(CN101/VIEW FINDER connector to CN10/DCP-1 board)			
1pc	1-956-443-11	o	HARNESS, VF
CN10	1-778-549-11	o	HOUSING, 20P
19pcs	1-778-554-11	o	CONTACT, FEMALE AWG28-30
CN101	1-565-051-21	o	CONNECTOR, ROUND WITH C 20P, FEMALE

1-4. Supplied Accessories

Ref. No. or Q'ty	Part No.	SP	Description
1pc	A-6772-374-A	s	BELT ASSY, SHOULDER
1pc	A-8277-622-A	o	ARM ASSY, SLIDE [For J except DNV-5]
1pc	1-542-295-11	s	MICROPHONE [For DNW-7/7P/90/90P/90WS/90WSP]
1pc	3-191-064-01	o	COVER, RAIN [For J except DNV-5]
1pc	3-676-269-00	s	CAP (SOCKET SIDE), DUST [For DNV-5]
1pc	3-709-104-01	s	SCREEN, WINDOW
2pcs	3-741-726-01	o	CAP (2), XLR [For UC, EK]
4pcs	3-741-726-01	o	CAP (2), XLR [For J]
2pcs	3-741-727-01	o	CAP (1), XLR [For UC, EK]
3pcs	7-627-556-58	s	SCREW +P 2.6X5

http://getMANUAL.com

Section 2
Semiconductor Pin Assignments

ここに記載されている半導体は，それぞれの機能を等価的に表したものです。　なお，互換性のない型名を併記していることがありますので，部品を交換するときは，Spare Partsの章を参照してください。
等価回路はＩＣメーカーのデータブックに従いました。

Semiconductors of which functions are equivalent are described here. For parts replacement, refer to the section of Spare Parts in this manual. The circuit diagram of each IC is obtained from the IC data book published by the manufacturer.

DIODE **Page**

1S2835-T1 2-4
1S2836 2-4
1S2837-T1 2-4
1SS123-T1 2-4
1SS184 2-4
1SS226 2-4
1SS301-TE85L 2-4
1SS302 2-4
1SS302-TE85L 2-4

CL-150D-CD 2-4
CL-150D-CD-T 2-4
CL-150PG-CD 2-4
CL-150PG-CD-T 2-4
CL-150R-CD 2-4
CL-150R-CD-T 2-4
CL-150UR-CD-T 2-4
CL-170UR-CD 2-4
CL-170UR-CD-T 2-4
CL-200HR-C-TSL 2-4
CL-200HR-C-TUL 2-4

DA204U 2-4
DA204UT106 2-4
DAN202U 2-4
DAN202UT106 2-4
DAP202U 2-4
DAP202UT106 2-4

EC10QS-04 2-4
EC10QS04-TE12L5 2-4
ECL06B025-F 2-4
ECL06B025-TE16F2 2-4
ERA15 2-4
ERA15-06 2-4

GL3UR8 2-4

HSM107S 2-4
HSM107S-TL 2-4
HSM88AS 2-4
HSM88AS-TL 2-4
HSM88WA 2-4
HSM88WA-TL 2-4

MA141WK 2-4
MA721WA-TX 2-4
MBRS130LT3 2-4

RD15M-B1 2-4

DIODE **Page**

RD15M-T1B1 2-4
RD2.4M-B 2-4
RD2.4M-T1B 2-4
RD2.4UH-T1 2-4
RD3.0UH-T1 2-4
RD3.3M-B 2-4
RD3.3M-T1B 2-4
RD3.3UH(1)-T1 2-4
RD3.3UH-T1 2-4
RD4.3M-B 2-4
RD4.3M-T1B 2-4
RD4.3UH-T1 2-4
RD5.1M-T1B 2-4
RD6.2M-B 2-4
RD6.2M-T1B 2-4
RD6.2UJN-T1 2-4
RD6.8M-B 2-4
RD6.8M-T1B 2-4

SB007T03Q 2-4
SB007T03Q-TL 2-4
SB01-05CP 2-4
SB01-05CP-TB 2-4
SB01-15CP 2-4
SB01-15CP-TB 2-4
SB05-05CP 2-4
SB05-05CP-TB 2-4
SB07-03C 2-4
SB07-03C-TB 2-4
SB20-03P 2-4
SB20-03P-TD 2-4

UZM5.1B 2-4

V09C 2-4
V11N 2-4

TRANSISTOR **Page**

2SA1162-G 2-4
2SA1226-E4 2-4
2SA1226-T1E3E4 2-4
2SA1314C-TE12L 2-4
2SA1462-T1Y33Y34 2-4
2SA1462-Y33 2-4
2SA1576-R 2-4
2SA1576T106R 2-4
2SA1610-T1Y34 2-4
2SA1610-Y33 2-4
2SA1611-M5M6 2-4
2SA1611-M6 2-4
2SA1611-T1M6 2-4
2SA1611T1-M5M6 2-4
2SA1808-PT106 2-4
2SA812-T1-M5M6 2-4
2SB1114-T1ZLZK 2-4
2SB1121-ST 2-4
2SB1132-P 2-4
2SB1132-T100-QR 2-4
2SB1440S-TX 2-4
2SB624-BV345 2-4
2SB624-T1BV3 2-4
2SB798-DL 2-4
2SB798-T1-DLDK 2-4
2SC1623 2-4
2SC1623-T1-L5L6 2-4
2SC2713-G 2-4
2SC2713G-TE85L 2-4
2SC3360-N16 2-4
2SC3360-T1N17 2-4
2SC3735-L-B35 2-4
2SC3735-T1B-B34 2-4
2SC4081T106R 2-4
2SC4116-YG 2-4
2SC4116YG-TE85L 2-4
2SC4176-B34 2-4
2SC4176T1B33B34B35 ... 2-4
2SC4177-L6 2-4
2SC4177-T1L6 2-4
2SC4178-F13F14-T1 2-4
2SC4178-F14 2-4
2SC4207-YGRTE85L 2-4
2SC4213-B 2-4
2SC4213A-TE85L 2-4
2SC4213B-TE85L 2-4
2SD1624-T 2-5
2SD1624-T-TD 2-5
2SD596DV345 2-4
2SD596T1-DV345 2-4

TRANSISTOR **Page**

2SJ187 2-5
2SJ187-TD 2-5
2SJ244JY 2-5
2SJ244JY-TL 2-5
2SK1113 2-5
2SK1483 2-5
2SK1483-T1 2-5
2SK1579DY-TL 2-5
2SK508-T1K53 2-5
2SK612 2-5
2SK620 2-5
2SK620-TX 2-5
2SK663 2-5
2SK664 2-5
2SK664-TX 2-5
2SK711-BL 2-5
2SK711-BL/V-TE85L 2-5
2SK852-T1X2 2-5
2SK852-T1X3 2-5
2SK852-X2 2-5
2SK853-K5 2-5
2SK853-T1K5 2-5
2SK94-T1X2 2-5
2SK94-X4 2-5

DTA144EKA-T146 2-5
DTA144EUA-T106 2-5
DTB143EK 2-5
DTB143EK-T-146 2-5
DTC114ESA 2-5
DTC114TKA-T146 2-5
DTC144EKA-T146 2-5
DTC144ESA 2-5
DTC144EUA-T106 2-5
DTD143EK 2-5
DTD143EK-T-146 2-5

MTD20N03HDL 2-6
MTD20N03HDL-T4 2-6

SI4435DY-T1 2-6
SI9435DY-T1 2-6
SI9936DY 2-6
SI9936DY-T1 2-6
SI9947DY-T1 2-6
SI9958DY 2-6
SI9958DY-T1 2-6

XN6401 2-6
XN6401-TW 2-6

TRANSISTOR **Page**

XN6435 2-6
XN6435-TW 2-6
XN6501 2-6
XN6501-TW 2-6
XN6534 2-6
XN6534-TW 2-6

OTHERS **Page**

GP1S33 2-6
GP2S09-C 2-6

PR-11-C 2-6
PR-11-C-T 2-6

IC **Page**

74LCX240MTCX 2-7
74LCX244MTCX 2-7
74LVX4245QSCX 2-7

AK4319-VM-E2 2-7
AK5340-VS 2-8
AK5340-VS-E1 2-8
AT27C512R-15RC 2-8

BA10358F-E2 2-8
BA225F-T2 2-9

CLC505AJE 2-9
CLC505AJE-T 2-9
CX22017 2-9
CX22017-TH 2-9
CXA1439M 2-9
CXA1439M-TH 2-9
CXA1486Q 2-10
CXA1486Q-TH 2-10
CXD1216M 2-11
CXD1216M-TH 2-11
CXD1217M 2-12
CXD1217M-TH 2-12
CXD2306Q 2-9
CXD2307R-T4 2-11
CXD2307R-T6 2-11
CXD2310AR-T4 2-13
CXD303-101Q 2-14
CXD8095Q 2-15
CXD8125Q 2-14
CXD8384Q 2-18
CXD8818R 2-20
CXD8820AR 2-16
CXD8821Q 2-22
CXD8845Q 2-17
CXK1203AR 2-17
CXK1203AR-T4 2-17
CXK58257AM-10L 2-19
CXK58257BM-10LL 2-19

DS1000Z-100 2-23
DS1000Z-100(TE2) 2-23
DS1302Z 2-23
DS1302Z-TE2 2-23

EL4581CS-TE2 2-23

HA11423MP 2-23
HD151015T 2-23
HD151015TEL 2-23
HD6473308RF10 2-24
HD6475368SCG16 2-26

LA7205M 2-25
LA7205M-TE-L 2-25
LB1843V-TLM 2-25
LB1857M-TE-L 2-25
LC35256AM-10-TLM 2-28
LM1881M 2-25

IC **Page**

LM334MX 2-25
LM35DM 2-28
LM35DMX 2-28
LM4041EIM3-1.2 2-28
LT1252CS8 2-28
LT1252CS8-E2 2-28

M27V201-200L6 2-28
M5201FP 2-29
M5201FP-600D 2-29
M5222FP 2-29
M5222FP-E1 2-29
M62352GP 2-29
M62352GP-75ED 2-29
MAX202CSE 2-29
MAX202CSE-TE2 2-29
MAX703CSA-TE2 2-30
MB3761PF 2-30
MB3761PF-T2 2-30
MB3793-42PNF 2-30
MB3793-42PNF-ER 2-30
MB88351PFV 2-31
MB88351PFV-ER 2-31
MC34151DR2 2-30
MC34182M 2-31
MC34182MEL 2-31
MP7523JS 2-30
MP7523JS-T2 2-30
MSM6524GS-VKR2 2-32

NJM082BM(TE2) 2-31
NJM082M 2-31
NJM2041M-D 2-31
NJM2041M-D(TE2) 2-31
NJM2901V(TE2) 2-31
NJM2903M 2-31
NJM2903M-TE2 2-31
NJM2903V(TE2) 2-31
NJM2904M 2-8
NJM2904M(TE2) 2-8
NJM2904V(TE2) 2-8
NJM3403AM 2-31
NJM3403AM(TE2) 2-31
NJM360M 2-33
NJM360M-TE2 2-33
NJM386M 2-33
NJM386M-T2 2-33
NJM431U 2-33
NJM431U-TE1 2-33
NJM4565M-A 2-31
NJM4565M-A(TE2) 2-31
NJM5532M 2-31
NJM5532M(TE2) 2-31
NJU7021V-TE2 2-33
NJU7024M 2-33
NJU7024V-TE2 2-33
NJU7034V-TE2 2-33

PCF8574T-T 2-33

IC **Page**

REF-03GSR 2-34

S-8054HN-CB-S 2-34
S-8054HN-CB-T1 2-34
S-80740AN-D4-S 2-34
S-80740AN-D4-T1 2-34
S-81230AG-RB-S 2-34
S-81230AG-RB-T1 2-34
SC7S04F 2-34
SC7S32F 2-34
SN74HC00APW-E05 2-34
SN74HC00APW-E20 2-34
SN74HC04APW-E05 2-35
SN74HC04APW-E20 2-35
SN74HC08APW-E05 2-35
SN74HC10APW-E05 2-35
SN74HC163APW-E05 2-35
SN74HC32APW-E05 2-35
SN74HC574APW-E05 2-36
SN74HC574APW-E20 2-36
SN74HCT04APW-E05 2-35
SN74HCT08APW-E05 2-35
SN74HCT08APW-E20 2-35
SN74HCT244APW-E05 2-7
SN74HCT32APW-E05 2-35
SN74HCT32APW-E20 2-35
SN74HCT541APW-E05 .. 2-36
SN74LS123NS 2-36
SN74LS123NS-E05 2-36
SN74LVC574APW-E05 .. 2-36
STK12C68-S45 2-36

TC4052BFS(ELQ) 2-37
TC4053BFS 2-37
TC4053BFS-EL 2-37
TC4066BFS-EL 2-37
TC4094BF 2-37
TC4094BF-TP2 2-37
TC4S01F 2-37
TC4S01F(TE85R) 2-37
TC4S66F 2-38
TC4S66F(TE85R) 2-38
TC4S69F 2-34
TC4S69F(TE85R) 2-34
TC4S81F(TE85R) 2-38
TC4W53F 2-38
TC4W53FU 2-38
TC4W53FU(TE12R) 2-38
TC4W66FU(TE12R) 2-38
TC74AC86F 2-38
TC74HC4052AFS(EL) 2-38
TC74HC4053AFS 2-38
TC74HC4053AFS-EL 2-38
TC74HC4538AFS-EL 2-39
TC74VHC00FS(EL) 2-34
TC74VHC02F 2-39
TC74VHC02FS(EL) 2-39
TC74VHC04FS(EL) 2-35
TC74VHC08FS(EL) 2-35
TC74VHC10FS(EL) 2-35

IC	Page
TC74VHC125FS(EL)	2-39
TC74VHC138FS(EL)	2-39
TC74VHC139FS(EL)	2-39
TC74VHC153FS(EL)	2-39
TC74VHC157FS(EL)	2-40
TC74VHC163F	2-35
TC74VHC163FS(EL)	2-35
TC74VHC164F	2-40
TC74VHC164FS(EL)	2-40
TC74VHC174FS(EL)	2-40
TC74VHC21F	2-40
TC74VHC21FS(EL)	2-40
TC74VHC221AFS(EL)	2-40
TC74VHC240FS(EL)	2-7
TC74VHC244FS(EL)	2-7
TC74VHC245FS(EL)	2-40
TC74VHC32FS(EL)	2-35
TC74VHC540FS(EL)	2-41
TC74VHC541FS(EL)	2-36
TC74VHC573FS(EL)	2-41
TC74VHC574FS(EL)	2-36
TC74VHC74FS(EL)	2-41
TC74VHC86FS(EL)	2-38
TC74VHCT541FS(EL)	2-36
TC74VHCU04FS(EL)	2-35
TC7S00FU(TE85R)	2-41
TC7S02FU	2-37
TC7S02FU-TE85L	2-37
TC7S04F(TE85R)	2-34
TC7S04FU(TE85R)	2-34
TC7S08F	2-38
TC7S08F(TE85R)	2-38
TC7S08FU(TE85R)	2-38
TC7S14F(TE85R)	2-41
TC7S14F-TE85L	2-41
TC7S14FU	2-41
TC7S32F(TE85R)	2-34
TC7S32FU(TE85R)	2-34
TC7S66F	2-41
TC7S66F(TE85R)	2-41
TC7SH00FU-TE85R	2-41
TC7SH02FU	2-37
TC7SH02FU-TE85R	2-37
TC7SH04FU	2-34
TC7SH04FU-TE85R	2-34
TC7SH08FU-TE85R	2-38
TC7SH32FU-TE85R	2-34
TC7W00FU	2-41
TC7W00FU(TE12R)	2-41
TC7W02F	2-42
TC7W02FU(TE12R)	2-42
TC7W04FU(TE12R)	2-42
TC7W08FU	2-42
TC7W08FU(TE12R)	2-42
TC7W14FU(TE12R)	2-42
TC7W32FU	2-42
TC7W32FU(TE12R)	2-42
TC7W74FU	2-42
TC7W74FU(TE12R)	2-42
TE7751	2-43

IC	Page
TL062CPW	2-31
TL062CPW-E05	2-31
TL064CPW	2-42
TL064CPW-E05	2-42
TL074CPW	2-42
TL074CPW-E05	2-42
TL082CPW-E05	2-31
TL1451ACPW-E05	2-44
TL5001CD-E1	2-44
TL5001CD-E2	2-44
TLC272CPS	2-44
TLC272CPS-E05	2-44
TLC272CPW-E05	2-44
TLC274CPW	2-44
TLC274CPW-E05	2-44
TLC2932IPW	2-45
TLC2932IPW-E05	2-45
TLC2932IPW-E20	2-45
TSC426C0A	2-44
TSC426C0A-T2	2-44
UPC319G2	2-44
UPC358G2-E2	2-8
UPC4572G2-E2	2-8
UPD16502GS(1)	2-45
UPD16502GS(1)-E2	2-45
UPD42280GU-30	2-46
UPD42280GU-30-E2	2-46
UPD4516161G5-A12	
-7JF	2-46
UPD4516821G5-A12	
-7JF	2-51
UPD4702G	2-45
UPD485505G-35	2-51
UPD485505G-35-E2	2-51
UPD6453GT-610	2-47
UPD6453GT-610-E2	2-47
UPD6456GS-620	2-48
UPD6456GS-620-E2	2-48
UPD72002GB-11-3B4	2-49
UPD78014GC-574	
-AB8	2-50
WS57C010F-70C	2-51
X24164SIC7000	2-51
X24C02P	2-51
X24C02S-3.0	2-51
X24C02S-3.0-C7000	2-51
X24C16SI	2-52
X24C16SI-C7000	2-52

DIODE

-TOP VIEW-

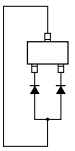

1S2835-T1
1S2836
DAP202U
DAP202UT106
HSM88WA
HSM88WA-TL
MA721WA-TX

-TOP VIEW-

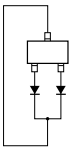

1S2837-T1
1SS184
1SS301-TE85L
DAN202U
DAN202UT106
MA141WK

-TOP VIEW-

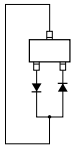

1SS123-T1
1SS226
1SS302
1SS302-TE85L
DA204U
DA204UT106
HSM107S
HSM107S-TL
HSM88AS
HSM88AS-TL
SB007T03Q
SB007T03Q-TL

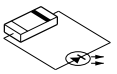

CL-150D-CD ;ORANGE
CL-150D-CD-T
CL-150PG-CD ;GREEN
CL-150PG-CD-T
CL-150R-CD ;RED
CL-150R-CD-T
CL-150UR-CD-T ;RED

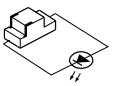

CL-170UR-CD ;RED
CL-170UR-CD-T

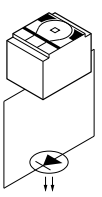

CL-200HR-C-TSL ;RED
CL-200HR-C-TUL

-TOP VIEW-

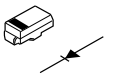

EC10QS-04
EC10QS04-TE12L5

-TOP VIEW-

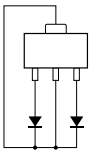

ECL06B025-F
ECL06B025-TE16F2
SB20-03P
SB20-03P-TD

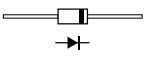

ERA15
ERA15-06

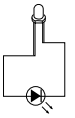

GL3UR8 ;RED

-TOP VIEW-

RD15M-B1
RD15M-T1B1
RD2.4M-B
RD2.4M-T1B
RD3.3M-B
RD3.3M-T1B
RD4.3M-B
RD4.3M-T1B
RD5.1M-T1B
RD6.2M-B
RD6.2M-T1B
RD6.8M-B
RD6.8M-T1B
UZM5.1B

-TOP VIEW-

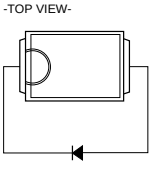

MBRS130LT3

-TOP VIEW-

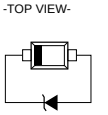

RD2.4UH-T1
RD3.0UH-T1
RD3.3UH(1)-T1
RD3.3UH-T1
RD4.3UH-T1
RD6.2UJN-T1

-TOP VIEW-

SB01-05CP
SB01-05CP-TB
SB01-15CP
SB01-15CP-TB
SB07-03C
SB07-03C-TB

TOP VIEW

SB05-05CP
SB05-05CP-TB

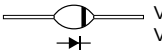

V09C
V11N

TRANSISTOR

-TOP VIEW-

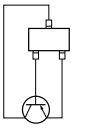

2SA1162-G
2SA1226-E4
2SA1226-T1E3E4
2SA1462-T1Y33Y34
2SA1462-Y33
2SA1576-R
2SA1576T106R
2SA1610-T1Y34
2SA1610-Y33
2SA1611-M5M6
2SA1611-M6
2SA1611-T1M6
2SA1611T1-M5M6
2SA1808-PT106
2SA812-T1-M5M6
2SB624-BV345
2SB624-T1BV3

-TOP VIEW-

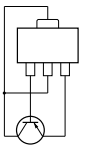

2SA1314C-TE12L
2SB1114-T1ZLZK
2SB1121-ST
2SB1132-P
2SB1132-T100-QR
2SB1440S-TX
2SB798-DL
2SB798-T1-DLDK

-TOP VIEW-

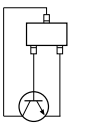

2SC1623
2SC1623-T1-L5L6
2SC2713-G
2SC2713G-TE85L
2SC3360-N16
2SC3360-T1N17
2SC3735-L-B35
2SC3735-T1B-B34
2SC4081T106R
2SC4116-YG
2SC4116YG-TE85L
2SC4176-B34
2SC4176T1B33B34B35
2SC4177-L6
2SC4177-T1L6
2SC4178-F13F14-T1
2SC4178-F14
2SC4213-B
2SC4213A-TE85L
2SC4213B-TE85L
2SD596DV345
2SD596T1-DV345

-TOP VIEW-

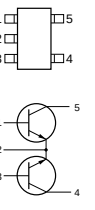

2SC4207-YGRTE85L

-TOP VIEW-

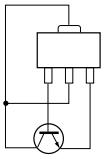

2SD1624-T
2SD1624-T-TD

-TOP VIEW-

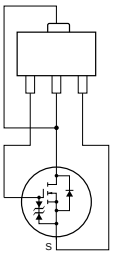

2SK1579DY-TL

-TOP VIEW-

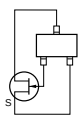

2SK664
2SK664-TX

-TOP VIEW-

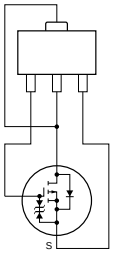

2SJ187
2SJ187-TD
2SJ244JY
2SJ244JY-TL

-TOP VIEW-

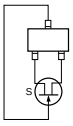

2SK508-T1K53
2SK663
2SK711-BL
2SK711-BL/V-TE85L
2SK852-T1X2
2SK852-T1X3
2SK852-X2
2SK853-K5
2SK853-T1K5
2SK94-T1X2
2SK94-X4

-TOP VIEW-

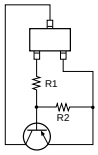

DTA144EKA-T146 (R1 = 47 K,R2 = 47 K)
DTA144EUA-T106 (R1 = 47 K,R2 = 47 K)
DTB143EK (R1 = 4.7 K,R2 = 4.7 K)
DTB143EK-T-146

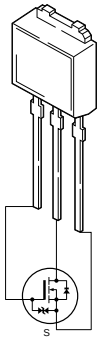

2SK1113

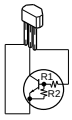

DTC114ESA (R1=10K,R2=10K)
DTC144ESA

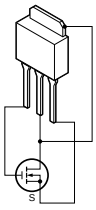

2SK612

-TOP VIEW-

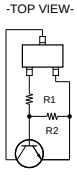

DTC114TKA-T146 (R1 = 10 K,R2 = OPEN)
DTC144EKA-T146 (R1 = 47 K,R2 = 47 K)
DTC144EUA-T106 (R1 = 47 K,R2 = 47 K)
DTD143EK (R1 = 4.7 K,R2 = 4.7 K)
DTD143EK-T-146

-TOP VIEW-

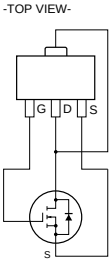

2SK1483
2SK1483-T1

-TOP VIEW-

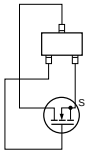

2SK620
2SK620-TX

OTHERS

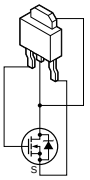

MTD20N03HDL
MTD20N03HDL-T4

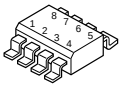

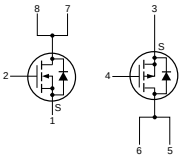

SI9958DY
SI9958DY-T1

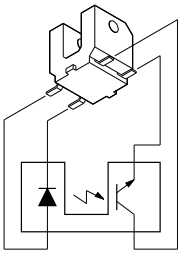

GP1S33

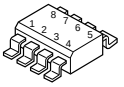

SI4435DY-T1
SI9435DY-T1

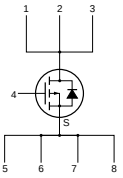

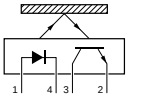

GP2S09-C

-TOP VIEW-

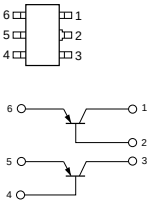

XN6401
XN6401-TW
XN6435
XN6435-TW

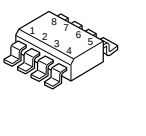

PR-11-C
PR-11-C-T

SI9936DY
SI9936DY-T1

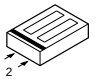

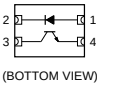

(BOTTOM VIEW)

-TOP VIEW-

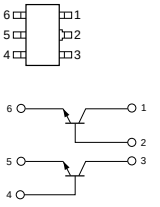

XN6501
XN6501-TW
XN6534
XN6534-TW

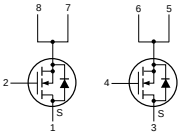

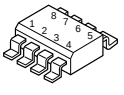

SI9947DY-T1

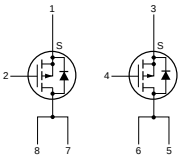

IC

74LCX240MTCX (NS)FLAT PACKAGE
TC74VHC240FS(EL) (TOSHIBA)FLAT PACKAGE

C-MOS 3-STATE INVERTER/LINE DRIVER
-TOP VIEW-

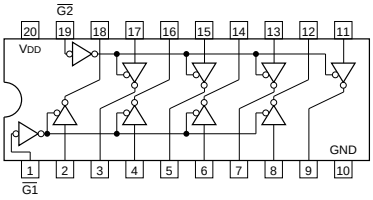

G	A	Y
0	0	1
0	1	0
1	X	HI-Z

0 ; LOW LEVEL
1 ; HIGH LEVEL
X ; DON'T CARE
HI-Z ; HIGH IMPEDANCE

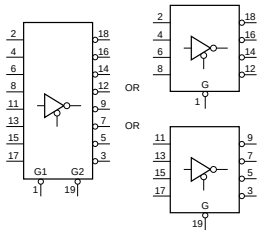

NOTE:

TYPE	VDD
74HC	+2 to +6 V
74ACT/74BC/74HCT	+4.5 to +5.5 V
74LCX	+2 to +3.6 V
74AC/74VHC	+2 to +5.5 V

74LVX4245QSCX (NS)FLAT PACKAGE

C-MOS 8-BIT DUAL SUPPLY VOLTAGE TRANSLATING TRANSCEIVER
– TOP VIEW–

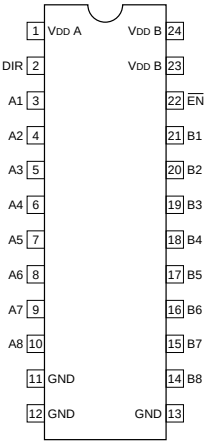

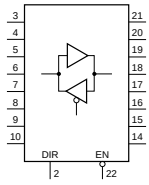

EN	DIR	OUTPUT
0	0	B TO A
0	1	A TO B
1	X	HI-Z

0 ; LOW LEVEL
1 ; HIGH LEVEL
HI-Z ; HIGH IMPEDANCE
X ; DON'T CARE

TYPE	VDD A	VDD B
74LVX3245	+5V	+3V
74LVX4245	+3V	+5V

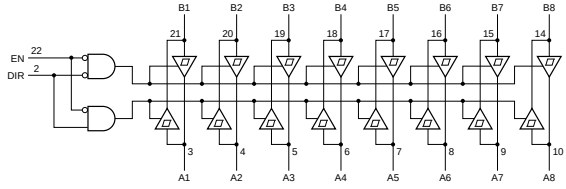

74LCX244MTCX (NS)FLAT PACKAGE
SN74HCT244APW-E05 (TI)FLAT PACKAGE
TC74VHC244FS(EL) (TOSHIBA)FLAT PACKAGE(SMALL)

C-MOS BUS BUFFER WITH 3-STATE OUTPUTS
-TOP VIEW-

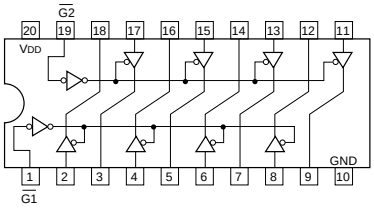

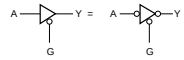

G	A	Y
0	0	0
0	1	1
X	X	HI-Z

0 ; LOW LEVEL
1 ; HIGH LEVEL
X ; DON'T CARE
HI-Z ; HIGH IMPEDANCE

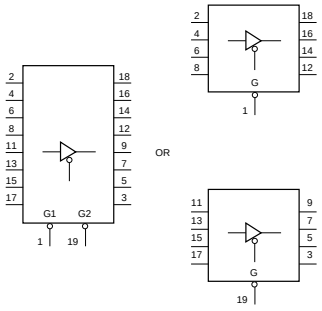

NOTE:

TYPE	VDD
74HC 40H	+2 to +6V
74ACT 74BCT 74FCT 74HCT	+4.5 to +5.5V
74LCX	+2 to +3.6V
74AC/74VHC	+2 to +5.5V

AK4319-VM-E2 (ASAHIKASEI MICRO)FLAT PACKAGE

C-MOS 18-BIT D/A CONVERTER
-TOP VIEW-

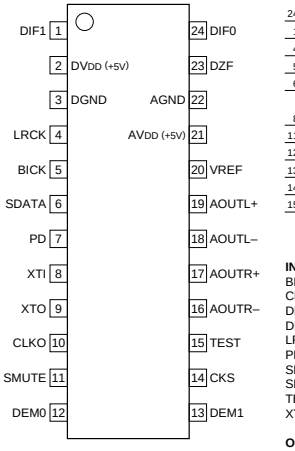

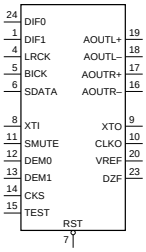

INPUTS

BICK	;	SERIAL BIT CLOCK
CKS	;	CLOCK SELECT (L:256 fs/H:384 fs)
DEM0, DEM1	;	DE-EMPHASIS SELECT
DIF0, DIF1	;	INPUT FORMAT SELECTS
LRCK	;	L/R CLOCK
PD	;	RESET
SDATA	;	SERIAL DATA INPUT
SMUTE	;	SOFT MUTE (H:MUTE)
TEST	;	TEST
XTI	;	CRYSTAL OSCILLATOR INPUT

OUTPUT

AOUTL+	;	L-CH ANALOG POSITIVE OUTPUT
AOUTL–	;	L-CH ANALOG NEGATIVE OUTPUT
AOUTR+	;	R-CH ANALOG POSITIVE OUTPUT
AOUTR–	;	R-CH ANALOG NEGATIVE OUTPUT
CLKO	;	LOCAL OSCILLATOR CLOCK OUTPUT
DZF	;	ZERO INPUT DETECT
VREF	;	REFERENCE VOLTAGE
XTO	;	CRYSTAL OSCILLATOR OUTPUT

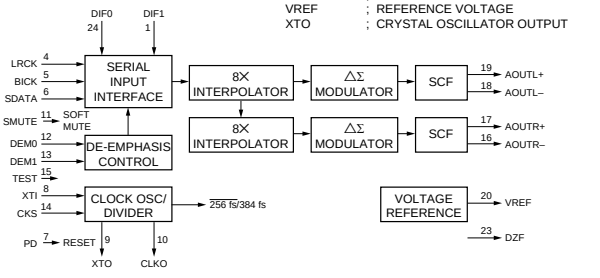

AK5340-VS (ASAHIKASEI MICRO)FLAT PACKAGE
AK5340-VS-E1

C-MOS 18-BIT 2 CHANNEL A/D CONVERTER
-TOP VIEW-

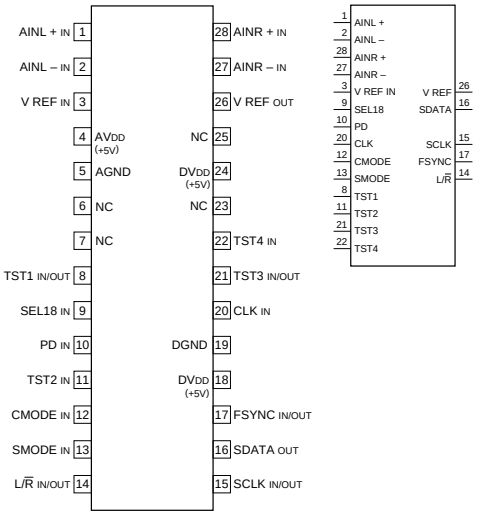

AVDD, AGND ; FOR ANALOG BLOCK
DVDD, DGND ; FOR DIGITAL BLOCK

INPUT
AINL + ; L-CH ANALOG POSITIVE INPUT
AINL – ; L-CH ANALOG NEGATIVE INPUT
AINR + ; R-CH ANALOG POSITIVE INPUT
AINR – ; R-CH ANALOG NEGATIVE INPUT
CLK ; MASTER CLOCK
(CMODE = H: 384 fs)
(CMODE = L: 256 fs)
CMODE ; MASTER CLOCK SELECT
(L : CLK=256 fs, 12.288 MHz @fs=48 kHz)
(H: CLK=384 fs, 18.432 MHz @fs=48 kHz)
PD ; POWER DOWN FOR DIGITAL SECTION
SEL 18 ; 18/16 BIT SELECT (L: 16-BIT, H: 18-BIT)
SMODE ; INTERFACE CLOCK SELECT
(L: SUB MODE)
(H: MASTER MODE)
TST 2, 4 ; TEST
V REF IN ; REFERENCE VOLTAGE

OUTPUT
SDATA ; SERIAL DATA
V REF ; REFERENCE VOLTAGE (–2.5V)

INPUT/OUTPUT
FSYNC ; FRAME SYNC CLOCK
(SUB MODE : FSYNC INPUT)
(MASTER MODE : FSYNC OUTPUT)
L/R ; INPUT CHANNEL SELECT
(SUB MODE: fs CLK INPUT)
(MASTER MODE: fs CLK OUTPUT)
SCLK ; SERIAL DATA CLOCK
(SUB MODE : SCLK INPUT)
(MASTER MODE : SCLK OUTPUT)
TST 1,3 ; TEST

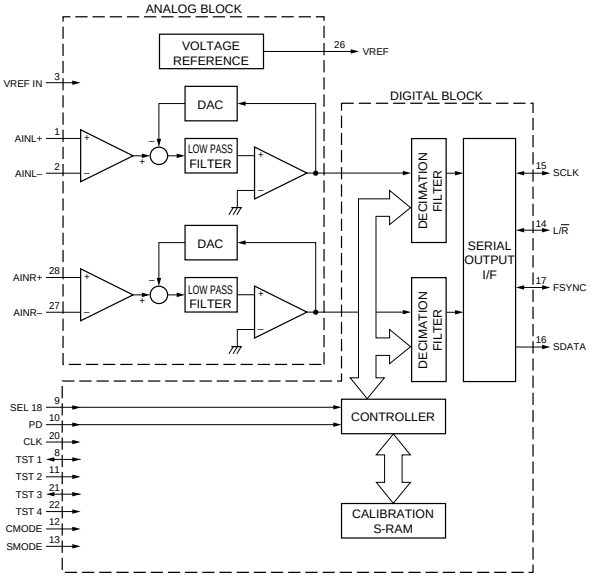

AT27C512R-15RC (ATMEL)

C-MOS 512K (65536x8) UV-EPROM
—TOP VIEW—

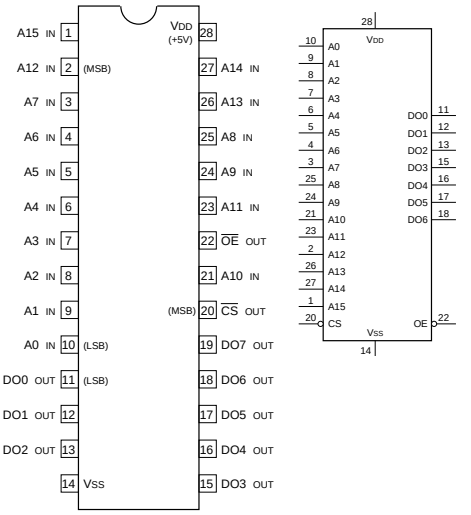

INPUT		DO	OPERATION
$\overline{CS}$	$\overline{OE}$		
1	X	HIGH-Z	STAND BY
0	1	HIGH-Z	OPERATING
0	0	DO	OPERATING

0 ; LOW LEVEL
1 ; HIGH LEVEL
X ; LOW OR HIGH LEVEL

INPUT
A0-A15 ; ADDRESS INPUTS
$\overline{CS}$; CHIP SELECT

OUTPUT
DO0-DO7 ; DATA OUTPUTS
$\overline{OE}$; OUTPUT ENABLE

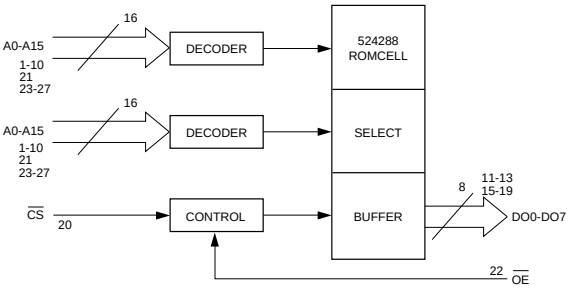

BA10358F-E2 (ROHM)FLAT PACKAGE
NJM2904M (JRC)FLAT PACKAGE
NJM2904M(TE2)
NJM2904V(TE2) (JRC)FLAT PACKAGE(SMALL)
UPC358G2-E2
UPC4572G2-E2 (NEC)FLAT PACKAGE

DUAL OPERATIONAL AMPLIFIERS
(SINGLE-SUPPLY TYPE)
–TOP VIEW–

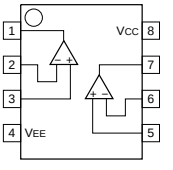

TYPE	VCC - VEE
828 TYPE	+5 to +36V
2244 TYPE	+2.5 to +36V
2904 TYPE	+3 to +24V
3404 TYPE	+4 to +32V
3414 TYPE	+3 to +10V
4572 TYPE	+4 to +14V
5216 TYPE	+4 to +32V
7022 TYPE	+3 to +16V
75W01 TYPE	+3 to +10V
33172 TYPE	+3 to +44V
OTHERS	+3 to +36V

BA225F-T2 (ROHM)FLAT PACKAGE

CR TIMER
-TOP VIEW-

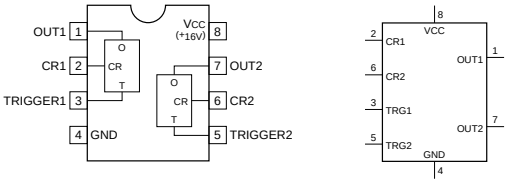

CLC505AJE (COMLINEAR)FLAT PACKAGE
CLC505AJE-T

OPERATIONAL AMPLIFIER
— TOP VIEW —

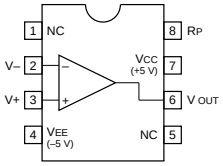

CX22017 (SONY)
CX22017-TH

VIDEO SIGNAL PROCESSOR
-TOP VIEW-

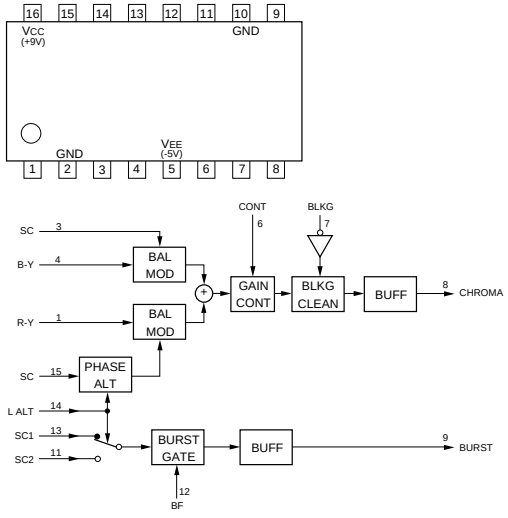

CXA1439M (SONY)FLAT PACKAGE
CXA1439M-TH

CORRELATED DOUBLE SAMPLING
–TOP VIEW–

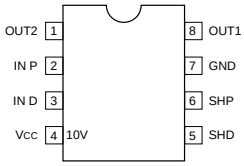

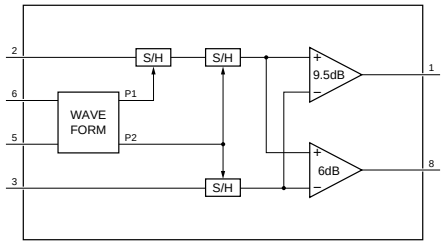

CXD2306Q (SONY)

C-MOS 10-BIT 75MSPS 1CH D/A CONVERTER
-TOP VIEW-

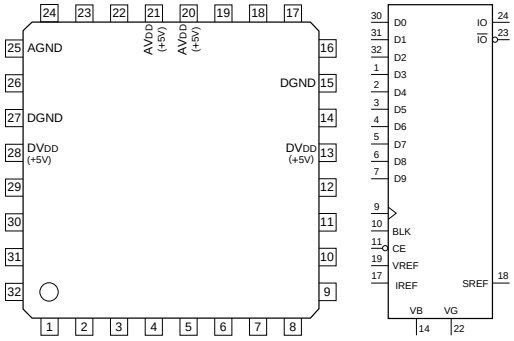

(AVDD, DVDD=+5V)

PIN No.	I/O	SIGNAL	PIN No.	I/O	SIGNAL
1	I	D3	17	I	IREF
2	I	D4	18	O	SREF
3	I	D5	19	I	VREF
4	I	D6	20	—	AVDD
5	I	D7	21	—	AVDD
6	I	D8	22	O	VG
7	I	D9(MSB)	23	O	$\overline{IO}$
8	—	NC	24	O	IO
9	I	CK	25	—	AGND
10	I	BLK	26	—	NC
11	I	$\overline{CE}$	27	—	DGND
12	—	NC	28	—	DVDD
13	—	DVDD	29	—	NC
14	O	VB	30	I	D0(LSB)
15	—	DGND	31	I	D1
16	—	NC	32	I	D2

BLK ; BLANKING PULSE INPUT
CE ; CHIP ENABLE
CK ; CLOCK INPUT
D0-7 ; DIGITAL DATA INPUTS
IO ; CURRENT OUTPUT
$\overline{IO}$; INVERT CURRENT OUTPUT
IREF ; CURRENT REFERENCE INPUT
SREF ; INDEPENDENT CONSTANT VOLTAGE OUTPUT
VB, VG ; FOR CAPACITOR
VREF ; VOLTAGE REFERENCE INPUT

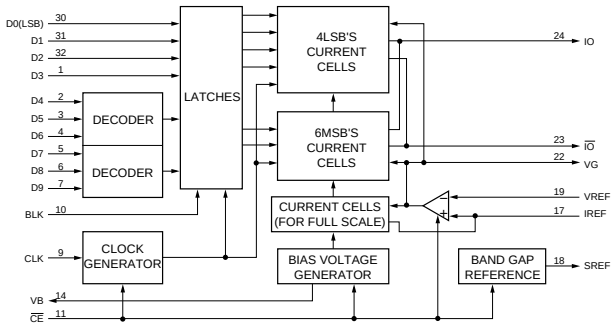

CXA1486Q (SONY)
CXA1486Q-TH

VIDEO AMPLIFIER FOR VIDEO CAMERA
- TOP VIEW -

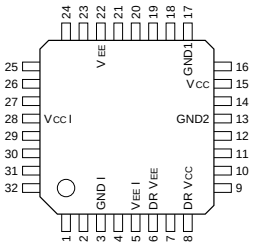

VCC, VCC I, DR VCC, = (+5V)
VEE, VEE I, DR VEE, = (-2.5 to -5.5V)

PIN No.	I/O	SIGNAL	PIN No.	I/O	SIGNAL
1	I	OUT SW	17	–	GND1
2	I	W SHAD	18	I	SIG IN
3	–	GND I	19	I	GS2
4	I	FB REF	20	I	GS1
5	–	VEE I	21	I	CLP PLS1
6	–	DR VEE	22	–	VEE
7	O	SIG OUT	23	O	LPF C1
8	–	DR VCC	24	I	BLACK1
9	I	KNEE PT	25	O	CLP C2
10	I	KNEE SW	26	I	G CTRL
11	O	FLR DET	27	I	F COMP
12	I	BLKG	28	–	VCC I
13	–	GND2	29	O	LPF C2
14	I	ZERO	30	I	BLACK2
15	–	VCC	31	O	CLP C1
16	I	BLK SHAD	32	I	CLP PLS2

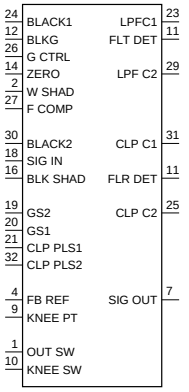

INPUT

BLACK1, 2	; FOR CLAMP DC COMPENSATION
BLKG	; BLANKING SIGNAL
BLK SHAD	; BLACK SHADING CORRECTION SIGNAL
CLP PLS1, 2	; CLAMP PULSE
F COMP	; FLARE COMPENSATION SIGNAL
FB REF	; OUTPUT 2 INVERT AMPLIFY DC ADJUST
G CTRL	; WHITE BALANCE GAIN CONTROL
GS1, 2	; GAIN SELECT
KNEE PT	; KNEE POINT
KNEE SW	; 1/4, 1/5 KNEE SELECT (4.5V=1/4 KNEE, 0V=1/5 KNEE)
OUT SW	; OUTPUT 3 AMPLIFY SELECT
SIG IN	; SIGNAL INPUT
W SHAD	; WHITE SHADING SIGNAL
ZERO	; VARIABLE GAIN AMPLIFY ZERO POINT ADJUST

OUTPUT

CLP C1, C2	; FOR CLAMP CAPACITANCE
FLR DET	; FLARE DETECT
LPF C1, C2	; CONNECT CAPACITANCE FOR LPF
SIG OUT	; SIGNAL OUTPUT

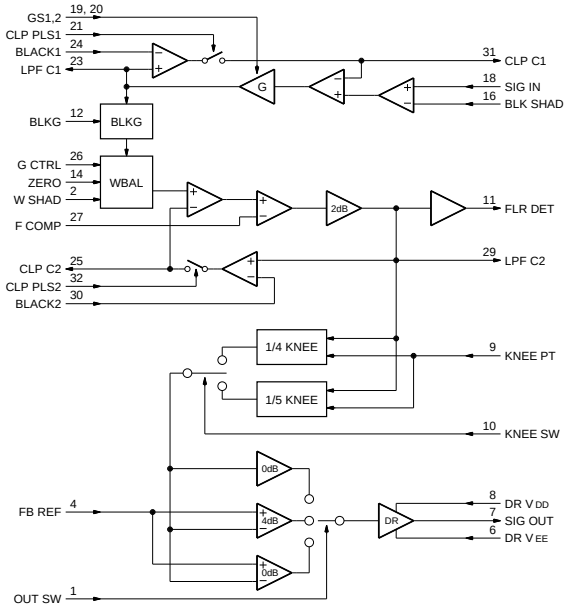

http://getMANUAL.com

CXD1216M (SONY)FLAT PACKAGE
CXD1216M-TH

C-MOS GENLOCK DRIVER

-TOP VIEW-

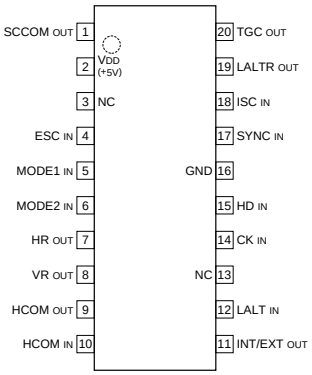

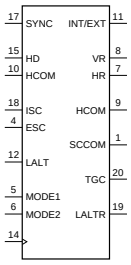

INPUT		MODE	SYSTEM
MODE1	MODE2		
0	0	M1	PAL-VBS
1	0	M2	PALM-VBS
0	1	M3	PAL,SECAM-VS/SC/LALT
1	1	M4	NTSC-VBS,NTSC-VS/SC PALM-VS/SC/LALT

0 ; LOW LEVEL
1 ; HIGH LEVEL

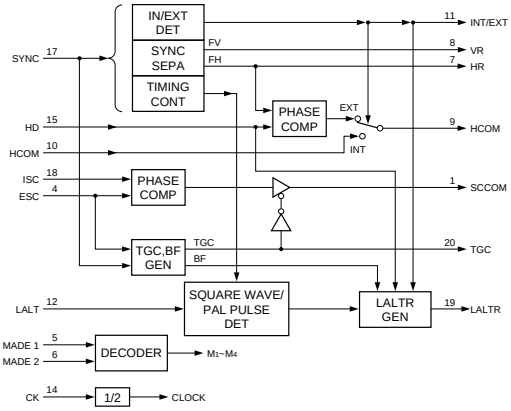

INPUT

CK ; 4fsc CLOCK INPUT
ESC ; SC/COLOR BURST
HCOM ; PHASE COMPARATE FROM CXD1217
HD ; H DRIVE FROM CXD1217
ISC ; SUBCARRIER FROM CXD1217
LALT ; LALT FROM REFERENCE SIGNAL GENERATOR
MODE1,2 ; SYSTEM SELECT
SYNC ; SYNC FROM REFERENCE SIGNAL GENERATOR

OUTPUT

HCOM ; PHASE COMPARATOR HR WITH HD
HR ; fH OF SYNC SEPARATE
INT/EXT ; INTERNAL/EXTERNAL SPECIFIED
LALTR ; LINE CHANGE RESET
SCCOM ; PHASE COMPARATOR ESC WITH ISC
TGC ; TRISTATE CONTROL
VR ; fv OF SYNC SEPARATE

CXD2307R-T4 (SONY)FLAT PACKAGE
CXD2307R-T6

C-MOS 10-BIT 50MSPS RGB 3CHANNEL D/A CONVERTER

— TOP VIEW —

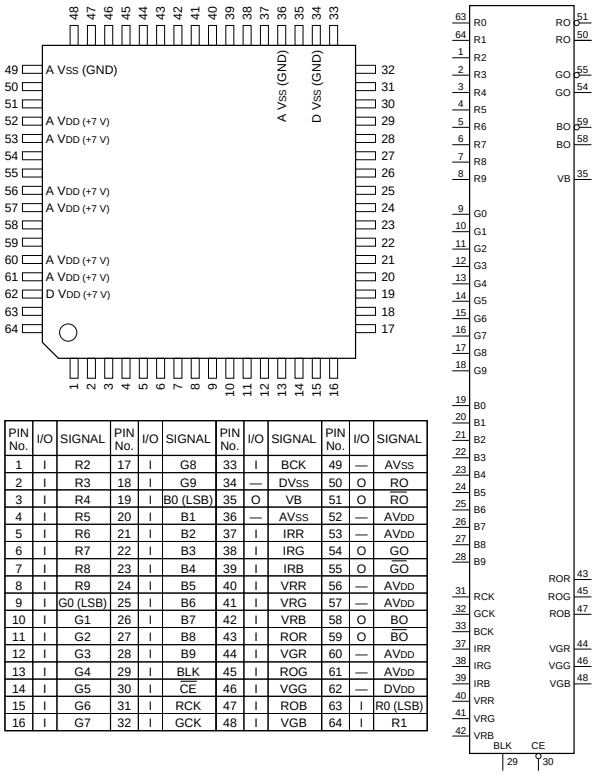

PIN No.	I/O	SIGNAL	PIN No.	I/O	SIGNAL	PIN No.	I/O	SIGNAL	PIN No.	I/O	SIGNAL
1	I	R2	17	I	G8	33	I	BCK	49	—	AVSS
2	I	R3	18	I	G9	34	—	DVSS	50	O	RO
3	I	R4	19	I	B0 (LSB)	35	O	VB	51	O	$\overline{RO}$
4	I	R5	20	I	B1	36	—	AVSS	52	—	AVDD
5	I	R6	21	I	B2	37	I	IRR	53	—	AVDD
6	I	R7	22	I	B3	38	I	IRG	54	O	GO
7	I	R8	23	I	B4	39	I	IRB	55	O	$\overline{GO}$
8	I	R9	24	I	B5	40	I	VRR	56	—	AVDD
9	I	G0 (LSB)	25	I	B6	41	I	VRG	57	—	AVDD
10	I	G1	26	I	B7	42	I	VRB	58	O	BO
11	I	G2	27	I	B8	43	I	ROR	59	O	$\overline{BO}$
12	I	G3	28	I	B9	44	I	VGR	60	—	AVDD
13	I	G4	29	I	BLK	45	I	ROG	61	—	AVDD
14	I	G5	30	I	$\overline{CE}$	46	I	VGG	62	—	DVDD
15	I	G6	31	I	RCK	47	I	ROB	63	I	R0 (LSB)
16	I	G7	32	I	GCK	48	I	VGB	64	I	R1

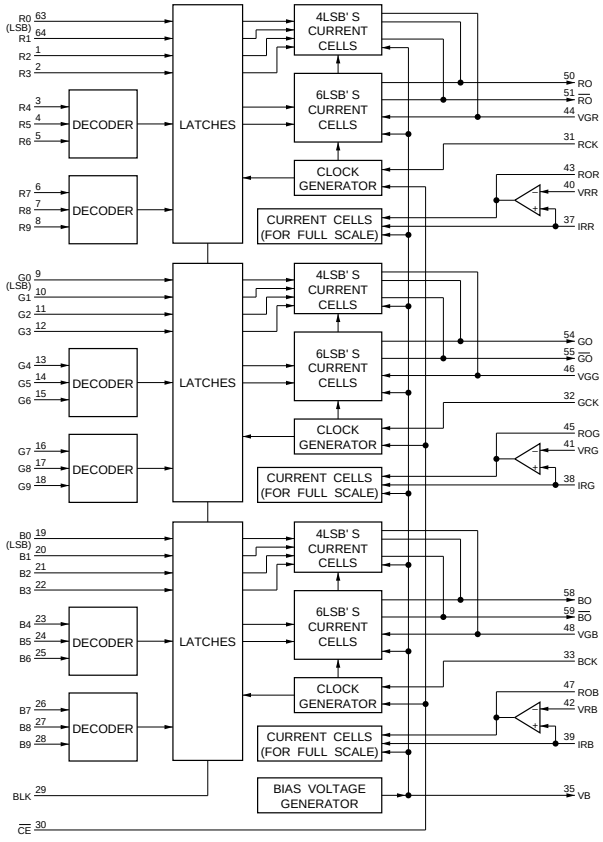

CXD1217M (SONY)FLAT PACKAGE
CXD1217M-TH

C-MOS SYNC GENERATOR
-TOP VIEW-

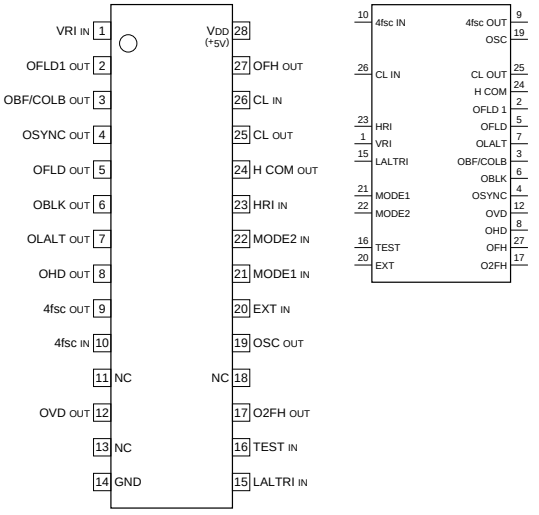

SYSTEM	4fsc	CLOCK
NTSC	910fH	910fH
PAL	1135fH+2fV	908fH
PALM	909fH	910fH
SECAM	—	908fH

INPUT		SYSTEM
MODE1	MODE2	
0	0	NTSC
0	1	SECAM
1	0	PALM
1	1	PAL

0 ; LOW LEVEL
1 ; HIGH LEVEL

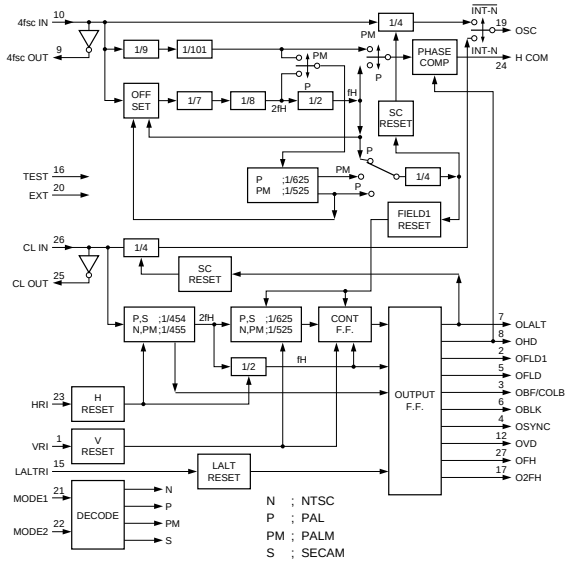

N ; NTSC
P ; PAL
PM ; PALM
S ; SECAM

INPUT

4fSC IN	;	4fSC INPUT
CL IN	;	CLOCK INPUT
EXT	;	SYNC MODE SELECT (L ; INTERNAL/H ; EXTERNAL)
HRI	;	H RESET
LALTRI	;	LINE CHANGE RESET
MODE 1,2	;	SYSTEM SELECT
VRI	;	V RESET

OUTPUT

4fSC OUT	;	4fSC OUTPUT
CL OUT	;	CLOCK OUTPUT
H COM	;	PHASE COMPARATOR
O2fH	;	2fH OUTPUT
OBF/COLB	;	BURST FLAG/COLOR BLANKING
OBLK	;	COMPOSITE BLANKING
OFH	;	H FREQUENCE
OFLD	;	EVEN,ODD
OFLD1	;	FIELD1
OHD	;	H DRIVE
OLALT	;	LINE CHANGE
OSC	;	SUB CARRIER
OSYNC	;	COMPOSITE SYNC
OVD	;	V DRIVE

(NTSC,PALM)

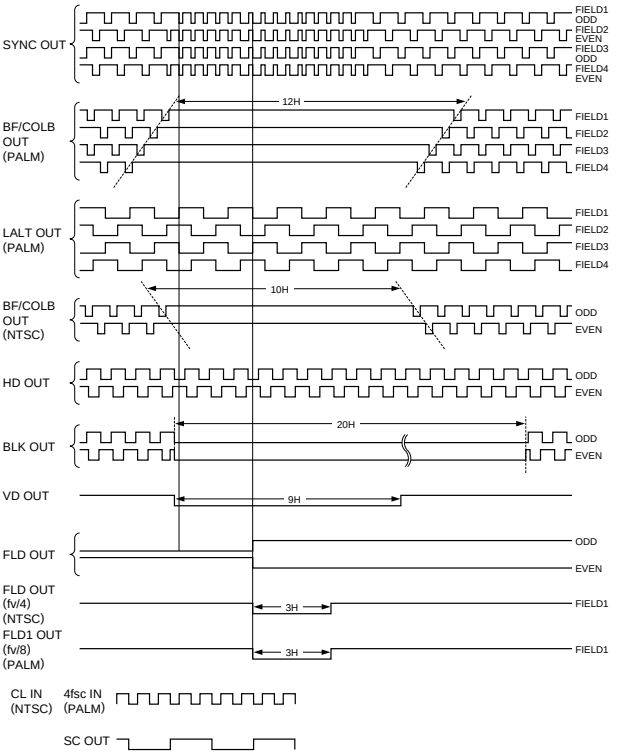

(PAL,SECAM)

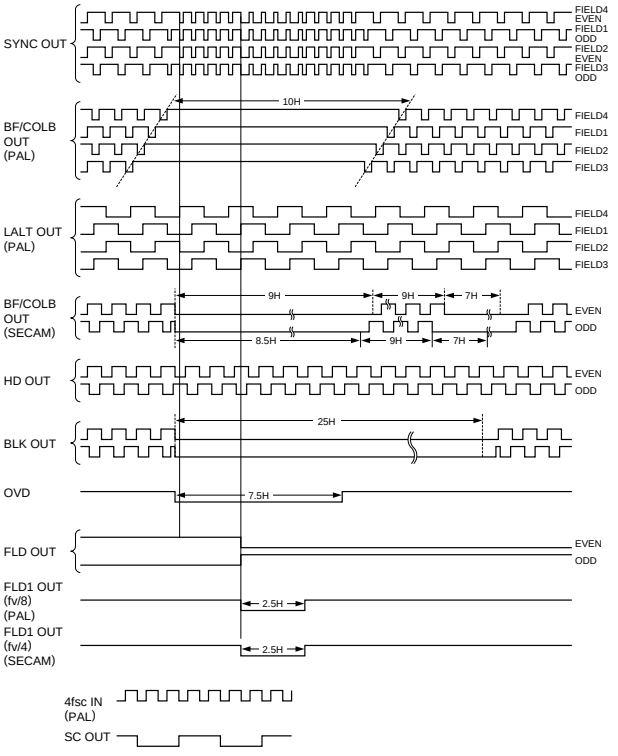

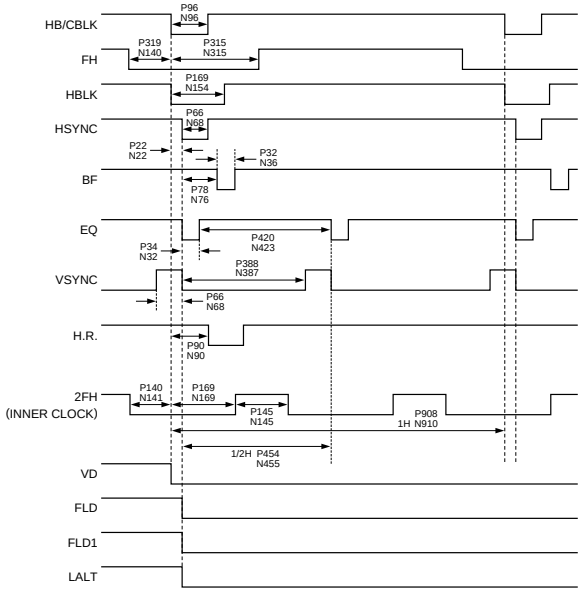

P : PAL,SECAM
N : NTSC,PALM

CXD2310AR-T4 (SONY)

C-MOS 10-BIT 20MSPS VIDEO A/D CONVERTER
—TOP VIEW—

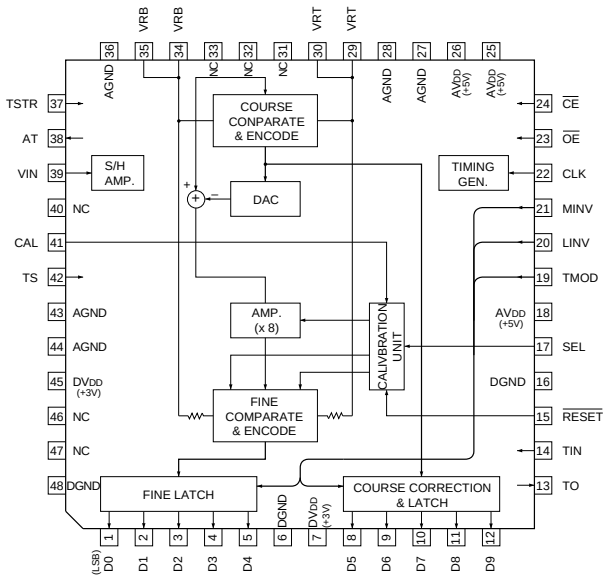

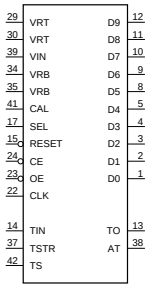

INPUT

CAL	; CALIBRATION PULSE INPUT
CE	; CHIP ENABLE
CLK	; CLOCK
LINV	; OUTPUT (D0-D8) INVERSION
MINV	; OUTPUT (D9) INVERSION
OE	; DIGITAL DATA OUTPUT ENABLE
RESET	; CALIBRATION CIRCUIT RESET
SEL	; OUTPUT DATA (D5-D9) SELECT FOR CALIBRATION (4-CLOCK) HIGH; THROUGH OUTPUT, LOW; DATA FIXED AS WITH D0-D4
TIN	; TEST SIGNAL INPUT
TMOD	; TEST MODE
TS	; TEST SIGNAL INPUT
TSTR	; TEST SIGNAL INPUT
VRB	; REFERENCE BOTTOM VOLTAGE
VRT	; REFERENCE TOP VOLTAGE

OUTPUT

AT	; TEST SIGNAL OUTPUT
D0-D9	; DIGIRAL DATA OUTPUT
TO	; TEST PIN

CXD303-101Q (SONY)

C-MOS SETUP ADD /REMOVE
—TOP VIEW—

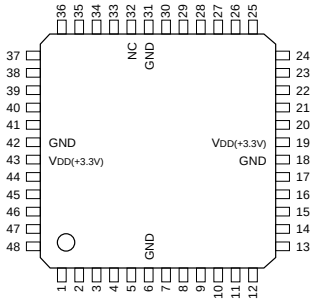

(VDD = +3.3V)

PIN No.	I/O	SIGNAL	PIN No.	I/O	SIGNAL	PIN No.	I/O	SIGNAL	PIN No.	I/O	SIGNAL
1	I	IPA	13	I	IDATA2	25	I	ISCK	37	O	ODATA5
2	I	ICF	14	I	IDATA3	26	I	ISTART	38	O	ODATA4
3	I	IVD	15	I	IDATA4	27	I	ISIN	39	O	ODATA3
4	I	IHD	16	I	IDATA5	28	O	SOUT	40	O	ODATA2
5	I	IDATA0	17	I	IDATA6	29	I	IMODE	41	O	ODATA1
6	—	GND	18	—	GND	30	I	I27CK	42	—	GND
7	I	IDATA1	19	—	VDD	31	—	GND	43	—	VDD
8	I	TCK	20	I	IDATA7	32	—	NC	44	O	ODATA0
9	I	TDI	21	I	IDATA8	33	O	ODATA9	45	O	OHD
10	I	TENA1	22	I	IDATA9	34	O	ODATA8	46	O	OVD
11	O	TDO	23	I	ISUPT	35	O	ODATA7	47	O	OCF
12	—	VST	24	I	$\overline{\text{IRESET}}$	36	O	ODATA6	48	O	OPA

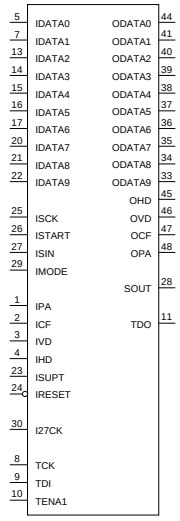

INPUT
I27CK ; SYSTEM CLOCK (27MHz)
ICF ; COLOR FRAMING DATA
IDATA0-IDATA9
; 4:2:2 PARALLEL DATA
IHD ; HD
IMODE ; SERIAL COMMUNICATION FORMAT SELECT
(1:ANALOG TBC PLAYBACK COMMUNICATION FORMAT,
0:DIGITAL β CAM RECORD COMMUNICATION FORMAT)
IPA ; PARITIY DATA
IRESET ; SYSTEM RESET
ISCK ; SERIAL COMMUNICATION CLOCK
ISIN ; SERIAL COMMUNICATION DATA
ISTART ; SERIAL COMMUNICATION START PULSE
ISURT ; HALF H BLANKING TIMING PULSE
IVD ; VD
TCK ; SMART CHECK TERMINAL
TDI ; SMART CHECK TERMINAL
TENA1 ; SMART CHECK TERMINAL

OUTPUT
OCF ; COLOR FRAMING DATA
ODATA0-ODATA9
; 4:2:2 PARALLEL DATA
OHD ; HD
OPA ; PARITY DATA
OVD ; VD
SOUT ; SERIAL COMMUNICATION DATA
TDO ; SMART CHECK TERMINAL

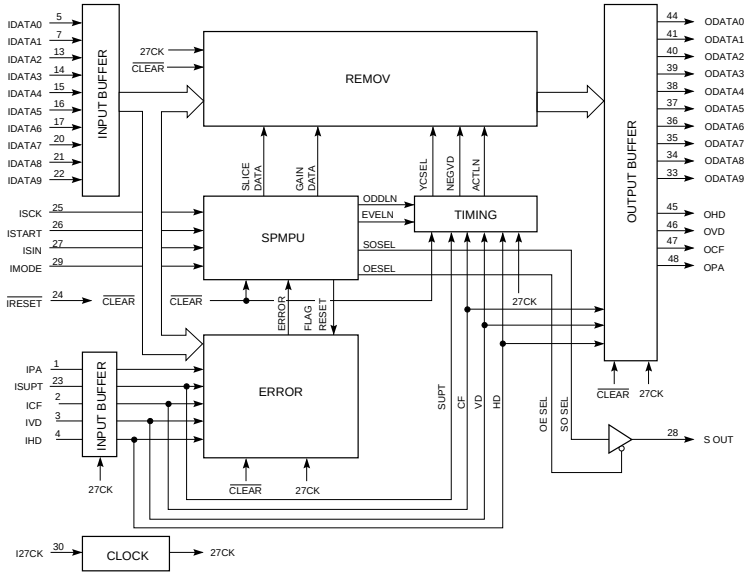

CXD8125Q (SONY)

C-MOS I/O PORT EXPANDER
—TOP VIEW—

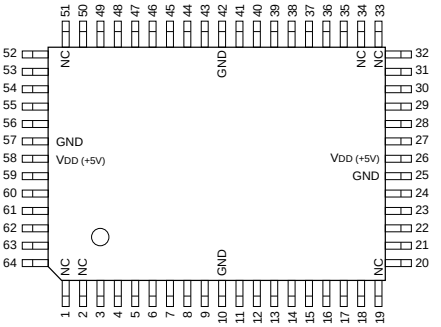

(VDD = +5V)

PIN NO.	I/O	SIGNAL	PIN NO.	I/O	SIGNAL	PIN NO.	I/O	SIGNAL	PIN NO.	I/O	SIGNAL
1	—	NC	17	I/O	PC6	33	—	NC	49	I/O	PX0
2	—	NC	18	I/O	PC7	34	—	NC	50	I/O	PX1
3	I/O	PB1	19	—	NC	35	I/O	D3	51	—	NC
4	I/O	PB2	20	I/O	PD0	36	I/O	D4	52	I/O	PX2
5	I/O	PB3	21	I/O	PD1	37	I/O	D5	53	I/O	PX3
6	I/O	PB4	22	I/O	PD2	38	I/O	D6	54	I/O	PA0
7	I/O	PB5	23	I/O	PD3	39	I/O	D7	55	I/O	PA1
8	I/O	PB6	24	I/O	PD4	40	I	CLR	56	I/O	PA2
9	I/O	PB7	25	—	GND	41	I	RST	57	—	GND
10	—	GND	26	—	VDD	42	—	GND	58	—	VDD
11	I/O	PC0	27	I/O	PD5	43	I	$\overline{\text{WR}}$	59	I/O	PA3
12	I/O	PC1	28	I/O	PD6	44	I	$\overline{\text{RD}}$	60	I/O	PA4
13	I/O	PC2	29	I/O	PD7	45	I	$\overline{\text{CS}}$	61	I/O	PA5
14	I/O	PC3	30	I/O	D0	46	I/O	A0	62	I/O	PA6
15	I/O	PC4	31	I/O	D1	47	I/O	A1	63	I/O	PA7
16	I/O	PC5	32	I/O	D2	48	I/O	A2	64	I/O	PB0

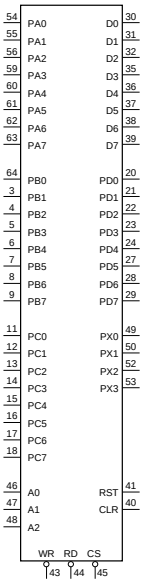

INPUT
A0-A2 ; ADDRESS
$\overline{\text{CLR}}$; CLEAR
$\overline{\text{CS}}$; CHIP SELECT
$\overline{\text{RD}}$; READ STROBE
$\overline{\text{RST}}$; RESET
$\overline{\text{WR}}$; WRITE ENABLE

INPUT/OUTPUT
D0-D7 ; DATA
PA0-PA7 ; PORT A
PB0-PB7 ; PORT B
PC0-PC7 ; PORT C
PD0-PD7 ; PORT D
PX0-PX3 ; PORT X

CXD8095Q (SONY)FLAT PACKAGE

C-MOS GATE ARRAY

—TOP VIEW—

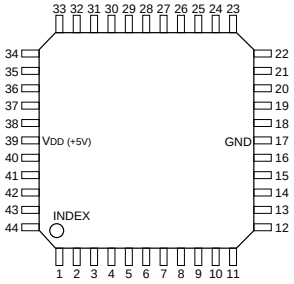

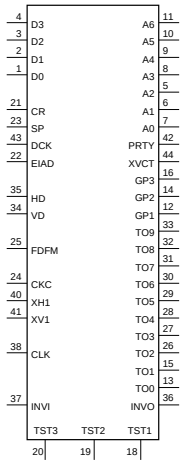

(VDD = +5V)

PIN No.	I/O	SYMBOL	PIN No.	I/O	SYMBOL	PIN No.	I/O	SYMBOL	PIN No.	I/O	SYMBOL
1	I	D0	12	O	GP1	23	I	SP	34	I	VD
2	I	D1	13	O	TO0	24	I	CKC	35	I	HD
3	I	D2	14	O	GP2	25	I	FDFM	36	O	INVO
4	I	D3	15	O	TO1	26	O	TO2	37	I	INVI
5	I/O	A2	16	O	GP3	27	O	TO3	38	I	CLK
6	I/O	A1	17	—	GND	28	O	TO4	39	—	VDD
7	I/O	A0	18	I	TST1	29	O	TO5	40	I	XH1
8	I/O	A3	19	I	TST2	30	O	TO6	41	I	XV1
9	O	A4	20	I	TST3	31	O	TO7	42	O	PRTY
10	O	A5	21	I	CR	32	O	TO8	43	I	DCK
11	O	A6	22	I	EIAD	33	O	TO9	44	O	XVCT

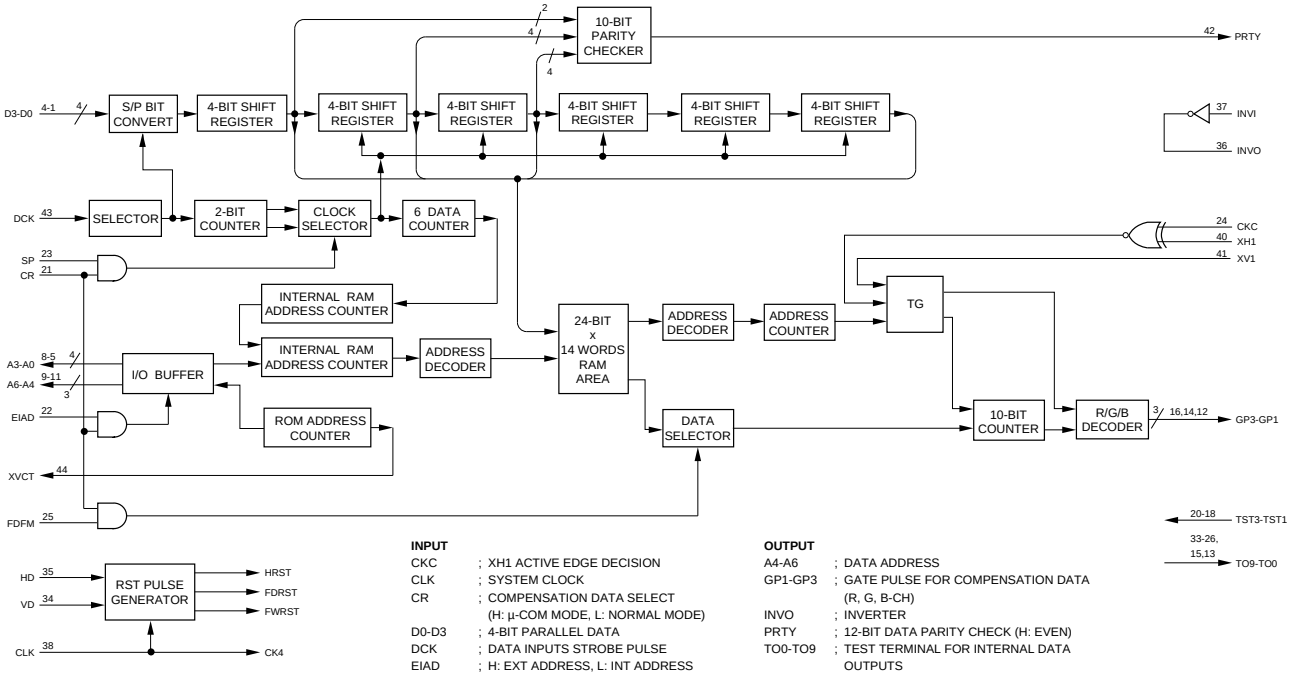

INPUT

CKC	;	XH1 ACTIVE EDGE DECISION
CLK	;	SYSTEM CLOCK
CR	;	COMPENSATION DATA SELECT (H: µ-COM MODE, L: NORMAL MODE)
D0-D3	;	4-BIT PARALLEL DATA
DCK	;	DATA INPUTS STROBE PULSE
EIAD	;	H: EXT ADDRESS, L: INT ADDRESS
FDFM	;	FRAME READ/FIELD READ SWITCH (H: FIELD READ)
HD	;	HORIZONTAL DRIVE
INVI	;	INVERTER
SP	;	INPUT DATA SERIAL/PARALLEL SWITCH (H: SERIAL)
TST1-TST3	;	TEST MODE SELECT
VD	;	VERTICAL DRIVE
XH1	;	CLOCK FOR COMPENSATION DATA
XV1	;	LINE COUNTER INPUT TERMINAL

OUTPUT

A4-A6	;	DATA ADDRESS
GP1-GP3	;	GATE PULSE FOR COMPENSATION DATA (R, G, B-CH)
INVO	;	INVERTER
PRTY	;	12-BIT DATA PARITY CHECK (H: EVEN)
TO0-TO9	;	TEST TERMINAL FOR INTERNAL DATA OUTPUTS
XVCT	;	ROM POWER VOLTAGE CONTROL TERMINAL

INPUT/OUTPUT

A0-A3	;	DATA ADDRESS OUTPUTS (DATA ADDRESS INPUTS;µ-COM MODE)

CXD8820AR (SONY)

C-MOS VITC READER GENERATOR

—TOP VIEW—

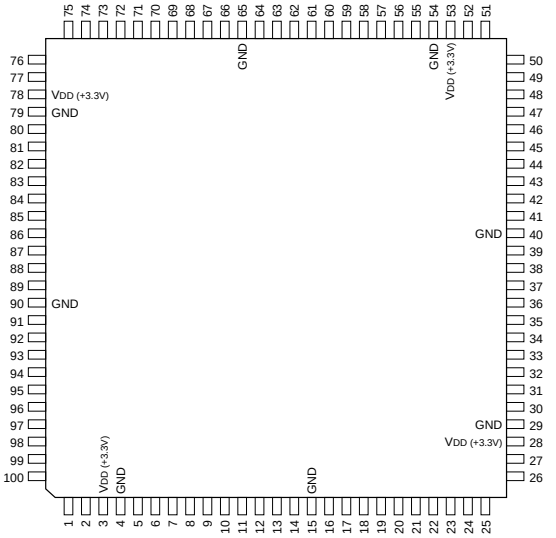

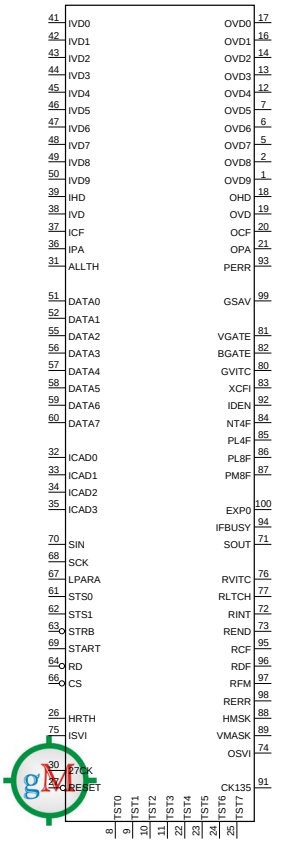

PIN NO.	I/O	SIGNAL	PIN NO.	I/O	SIGNAL	PIN NO.	I/O	SIGNAL	PIN NO.	I/O	SIGNAL
1	O	OVD9	26	I	HRTH	51	I/O	DATA0	76	O	RVITC
2	O	OVD8	27	I	$\overline{\text{RESET}}$	52	I/O	DATA1	77	O	RLTCH
3	—	VDD	28	—	VDD	53	—	VDD	78	—	VDD
4	—	GND	29	—	GND	54	—	GND	79	—	GND
5	O	OVD7	30	I	27CK	55	I/O	DATA2	80	O	GVITC
6	O	OVD6	31	I	ALLTH	56	I/O	DATA3	81	O	VGATE
7	O	OVD5	32	I	ICAD0	57	I/O	DATA4	82	O	BGATE
8	I	TST0	33	I	ICAD1	58	I/O	DATA5	83	O	XCFI
9	I	TST1	34	I	ICAD2	59	I/O	DATA6	84	O	NT4F
10	I	TST2	35	I	ICAD3	60	I/O	DATA7	85	O	PL4F
11	I	TST3	36	I	IPA	61	I	STS0	86	O	PL8F
12	O	OVD4	37	I	ICF	62	I	STS1	87	O	PM8F
13	O	OVD3	38	I	IVD	63	I	$\overline{\text{STRB}}$	88	O	HMSK
14	O	OVD2	39	I	IHD	64	I	$\overline{\text{RD}}$	89	O	VMASK
15	—	GND	40	—	GND	65	—	GND	90	—	GND
16	O	OVD1	41	I	IVD0	66	I	$\overline{\text{CS}}$	91	O	CK135
17	O	OVD0	42	I	IVD1	67	I	LPARA	92	O	IDEN
18	O	OHD	43	I	IVD2	68	I	SCK	93	O	PERR
19	O	OVD	44	I	IVD3	69	I	START	94	O	IFBUSY
20	O	OCF	45	I	IVD4	70	I	SIN	95	O	RCF
21	O	OPA	46	I	IVD5	71	O	SOUT	96	O	RDF
22	I	TST4	47	I	IVD6	72	O	RINT	97	O	RFM
23	I	TST5	48	I	IVD7	73	O	REND	98	O	RERR
24	I	TST6	49	I	IVD8	74	O	OSVI	99	O	G SAV
25	I	TST7	50	I	IVD9	75	I	ISVI	100	O	EXP0

INPUT

27CK	;	27MHz CLOCK
ALLTH	;	ALL THOUGH MODE
CS	;	CHIP SELECT (FOR PARALLEL INTERFACE)
HRTH	;	READER THOUGH MODE
ICAD0-ICAD3	;	IC ADDRESS
ICF	;	COLOR FRAMING
IHD	;	HD
IPA	;	PARITY
ISVI	;	SLICED VITC
IVD0-IVD9	;	VIDEO DATA
IVD	;	VD
LPARA	;	PARARELL INTERFACE SELECT
RD	;	READ (FOR PARALLEL INTERFACE)
RESET	;	POWER ON RESET
SCK	;	SERIAL INTERFACE CLOCK
SIN	;	SERIAL DATA
START	;	SERIAL INTERFACE START
STRB	;	STROBE (FOR PARALLEL INTERFACE)
STS0, STS1	;	STATUS 0, 1 (FOR PARALLEL INTERFACE)
TST0-TST7	;	FOR TEST 0-7

OUTPUT

BGATE	;	BLANKING LINE PULSE
CK135	;	13.5MHz CLOCK
EXP0	;	EXPANDED OUTPUT PORT
GSAV	;	(G) SAV PULSE
GVITC	;	GNENRATED VITC
HMSK	;	(R) VITC SEARCH LINE
IDEN	;	IC INTERFACE ENABLE
IFBUSY	;	INTERFACE BUSY
NT4F	;	NTSC 4FIELD
OCF	;	COLOR FRAMING
OHD	;	HD
OPA	;	PARITY
OSVI	;	SLICED VITC
OVD0-OVD9	;	VIDEO DATA
OVD	;	VD
PERR	;	PARITY ERROR
PL4F	;	PAL 4FIELD
PL8F	;	PAL 8FIELD
PM8M	;	PALM 8FIELD
RCF	;	READ COLOR FRAME BIT
RDF	;	READ DROP FRAME BIT
REND	;	READ END
RERR	;	READ ERROR SIGNAL
RFM	;	READ FEILD MARK BIT
RINT	;	READ END INTERRUPT
RLTCH	;	READ VITC LATCH PULSE
RVITC	;	READ VITC
SOUT	;	SERIAL DATA
VGATE	;	INSERT LINE PULSE
VMASK	;	(R) EAV_SAV MASK PULSE
XCFI	;	COLOR FRAMING INFORMATION

INPUT/OUTPUT

DATA0-DATA7	;	PARARELL INTERFACE DATA BUS

CXD8845Q (SONY)

C-MOS D1 SUPERIMPOSER

– TOP VIEW –

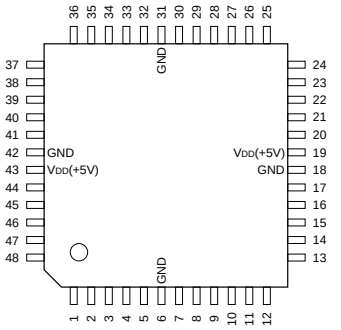

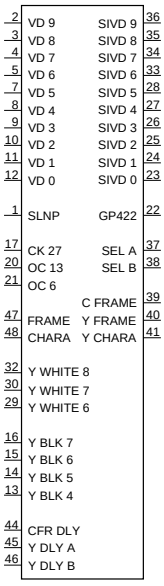

(VDD=+5V)

PIN No.	I/O	SIGNAL	PIN No.	I/O	SIGNAL
1	I	SLNP	25	O	SIVD 2
2	I	VD 9	26	O	SIVD 3
3	I	VD 8	27	O	SIVD 4
4	I	VD 7	28	O	SIVD 5
5	I	VD 6	29	I	Y WHITE 6
6	–	GND	30	I	Y WHITE 7
7	I	VD 5	31	–	GND
8	I	VD 4	32	I	Y WHITE 8
9	I	VD 3	33	O	SIVD 6
10	I	VD 2	34	O	SIVD 7
11	I	VD 1	35	O	SIVD 8
12	I	VD 0	36	O	SIVD 9
13	I	Y BLK 4	37	O	SEL A
14	I	Y BLK 5	38	O	SEL B
15	I	Y BLK 6	39	O	C FRAME
16	I	Y BLK 7	40	O	Y FRAME
17	I	CK 27	41	O	Y CHARA
18	–	GND	42	–	GND
19	–	VDD	43	–	VDD
20	I	OC 13	44	I	CFR DLY
21	I	OC 6	45	I	Y DLY A
22	O	GP422	46	I	Y DLY B
23	O	SIVD 0	47	I	FRAME
24	O	SIVD 1	48	I	CHARA

INPUT

CFR DLY ; DELAY CONTROL OF C FRAME SIGNAL
CHARA ; SUPERIMPOSE CHARACTER SIGNAL
CK 27 ; 27 MHz CLOCK
FRAME ; SUPER IMPOSE CHARACTER FRAME
SLNP ; 525/$\overline{625}$ LINE SELECTE
VD 0-9 ; DIGITAL VIDEO PARALLEL DATA
Y BLK 4-7 ; Y BLANKING LEVEL
Y DLY A, B ; DELAY CONTROL OF Y CHARA AND Y FRAME SIGNALS
Y WHITE 6-8; Y WHITE LEVEL

OUTPUT

C FRAME ; CHROMA FRAME PULSE
GP422 ; 4:2:2 GROUP PULSE
OC 13 ; 13.5 MHz CLOCK
OC 6 ; 6.75 MHz CLOCK
SEL A, B ; SELECTION SIGNAL OF INNER MULTIPLEXER
SIVD 0-9 ; DIGITAL VIDEO PARALLEL DATA AFTER SUPERIMPOSED
Y CHARA ; Y CHARACTER PULSE
Y FRAME ; Y FRAME PULSE

SEL A	SEL B	MPX
0	0	THROUGH
1	0	Y BLK
0	1	C BLK
1	1	Y WHITE

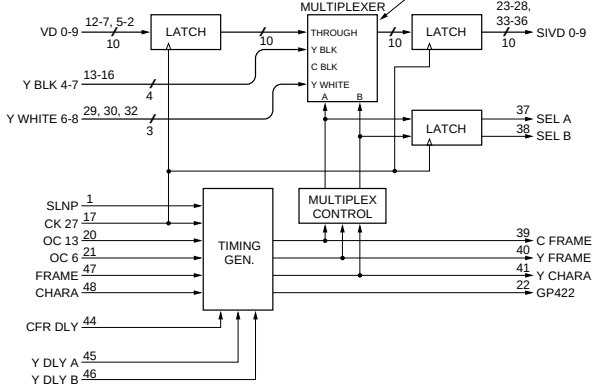

CXK1203AR (SONY)
CXK1203AR-T4

C-MOS DIGITAL LINE MEMORY

—TOP VIEW—

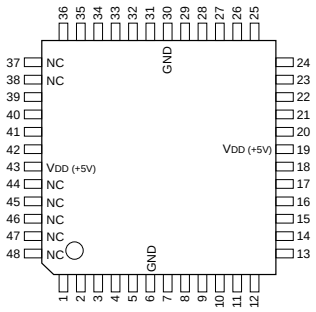

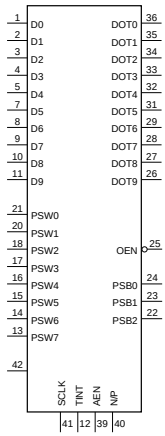

(VDD = +5V)

PIN NO.	I/O	SIGNAL	PIN NO.	I/O	SIGNAL	PIN NO.	I/O	SIGNAL	PIN NO.	I/O	SIGNAL
1	I	D0	13	I	PSW7	25	I	$\overline{OEN}$	37	—	N.C
2	I	D1	14	I	PSW6	26	O	DOT9	38	—	N.C
3	I	D2	15	I	PSW5	27	O	DOT8	39	I	AEN
4	I	D3	16	I	PSW4	28	O	DOT7	40	I	N/P
5	I	D4	17	I	PSW3	29	O	DOT6	41	I	SCLK
6	—	GND	18	I	PSW2	30	—	GND	42	I	CLK
7	I	D5	19	—	VDD	31	O	DOT5	43	—	VDD
8	I	D6	20	I	PSW1	32	O	DOT4	44	—	N.C
9	I	D7	21	I	PSW0	33	O	DOT3	45	—	N.C
10	I	D8	22	I	PSB2	34	O	DOT2	46	—	N.C
11	I	D9	23	I	PSB1	35	O	DOT1	47	—	N.C
12	I	TINT	24	I	PSB0	36	O	DOT0	48	—	N.C

AEN ; LINE MEMORY SELECT
CLK ; CLOCK
DIN0-DIN9 ; VIDEO DATA INPUT
DOT0-DOT9 ; VIDEO DATA OUTPUT
N/P ; NTSC/PAL/SECAM SELECT
OEN ; OUTPUT ENABLE
PSB0-PSB2 ; DELAY STEP SELECT (1 BITxN)
PSW0-PSW7 ; DELAY STEP SELECT (8 BITxN)
SCLK ; CLOCK EDGE SELECT
TINT ; TEST

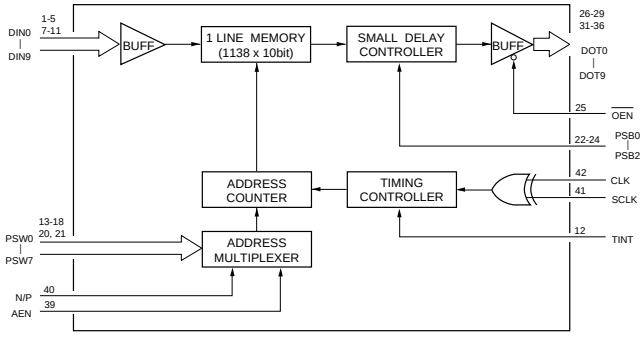

CXD8384Q (SONY)

C-MOS LTC READER/GENERATOR
-TOP VIEW-

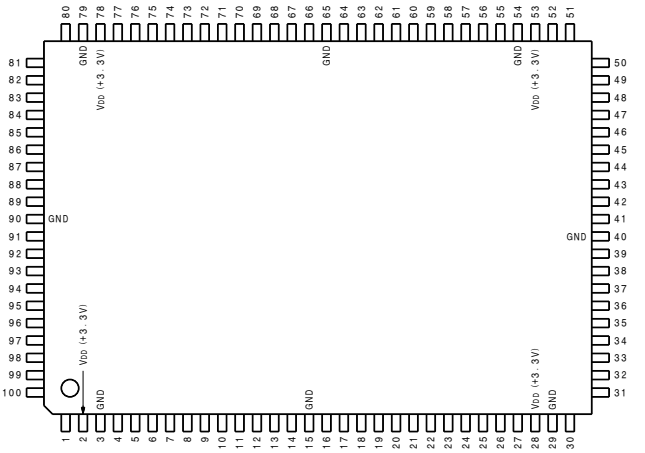

(VDD = +3.3V)

PIN No.	I/O	SIGNAL	PIN No.	I/O	SIGNAL	PIN No.	I/O	SIGNAL	PIN No.	I/O	SIGNAL
1	I/O	D2	26	I	CTLI	51	I	FRMI	76	O	INTG
2	I/O	D3	27	I	FWD	52	I	LSHI	77	O	INTL
3	–	VDD	28	–	VDD	53	–	VDD	78	–	VDD
4	–	GND	29	–	GND	54	–	GND	79	–	GND
5	I/O	D4	30	O	RSYC	55	O	LSHO	80	O	INTC
6	I/O	D5	31	O	LREV	56	O	VCEO	81	O	INTR
7	I/O	D6	32	O	DCLK	57	I	VCI1	82	O	INTX
8	I/O	D7	33	O	DATA	58	I	VCI2	83	I	TEST1
9	I	$\overline{CS}$	34	O	BER	59	O	LTCO	84	I	TEST2
10	I	$\overline{WR}$	35	I	DMCK	60	O	CFNG	85	I	TEST3
11	I	$\overline{RD}$	36	I	DEMI	61	I	REF	86	I	TEST4
12	I	A0	37	I	K16I	62	O	$\overline{XOUT}$	87	I	ALCK
13	I	A1	38	O	$\overline{XBK}$	63	O	PORT	88	O	CK2M
14	I	A2	39	I	$\overline{BKIN}$	64	I	NORM	89	I	CK1I
15	–	GND	40	–	GND	65	–	GND	90	–	GND
16	I	A3	41	O	BKO	66	O	NT4F	91	O	CK1O
17	I	A4	42	I	CSHD	67	O	PL4F	92	O	DCCK
18	I	A5	43	I	CSVD	68	O	PL8F	93	I	INTE
19	O	X1BE	44	I	HDI	69	O	PM8F	94	I	TEST5
20	I	X1TC	45	O	HDO	70	I	TEST11	95	I	TEST6
21	O	REC	46	O	VDO	71	I/O	LRRV	96	I	TEST7
22	O	OUT	47	O	IFRM	72	O	$\overline{XINT}$	97	I	TEST8
23	O	READ	48	O	FRAM	73	I	$\overline{XRES}$	98	I	TEST9
24	I	PBTC	49	I	DLYI	74	I	$\overline{BKUP}$	99	I/O	D0
25	I	LTCI	50	O	DLYO	75	O	INTM	100	I/O	D1

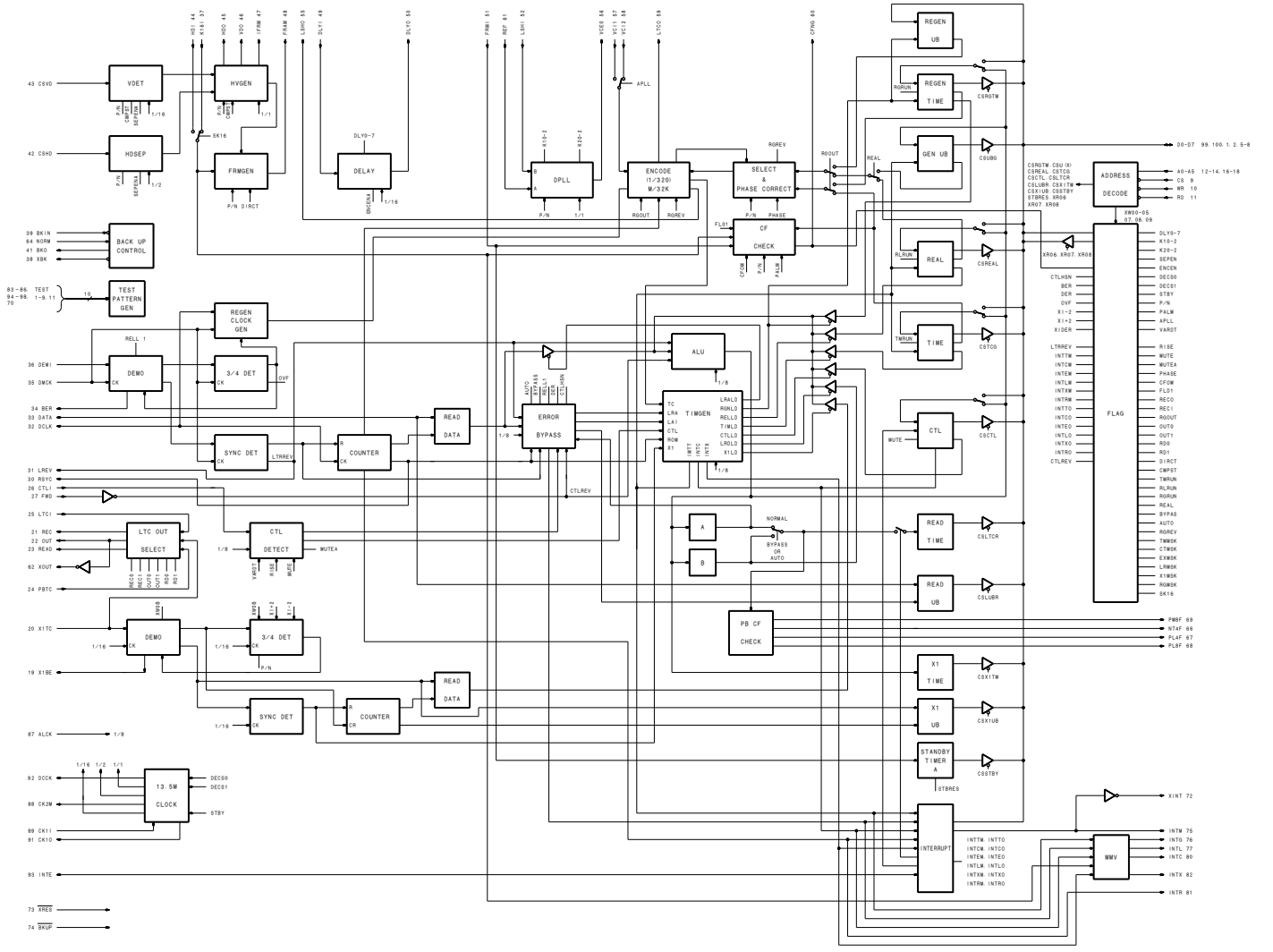

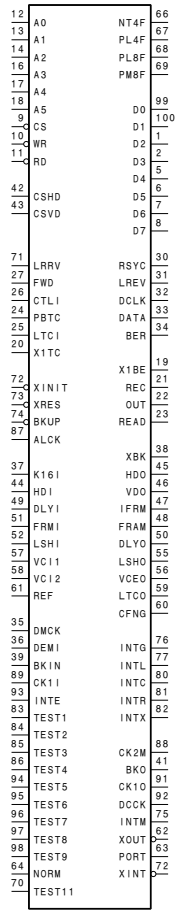

INPUT

A0-A5	;ADDRESS BUS IN
ALCK	;ARITHMETIC LOGIC UNIT CLOCK IN
BKIN	;BACKUP IN (NEGATIVE LOGIC)
BKUP	;BACKUP EXECUTION IN (NEGATIVE LOGIC)
CK1I	;SYSTEM CLOCK IN
CSHD	;COMPOSITE SYNC/HD IN
CSVD	;COMPOSITE SYNC/VD IN
CTLI	;CTL SIGNAL IN
DEMI	;LONGITUDINAL TIME AND CONTROL CODE IN
DLYI	;INPUT TO DELAY CIRCUIT
DMCK	;LTC DEMODULATE CLOCK IN
FRMI	;FRAME SIGNAL IN
FWD	;CTL DIRECTION SIGNAL IN
HDI	;HORIZONTAL SYNC INPUT
INTE	;EXTERNAL INTERRUPT IN (POSITIVE LOGIC)
K16I	;16KHz CLOCK IN
	BACKUP CLOCK IN
LRRV	;DIRECTION INPUT FOR LTC READER CALCULATION
LTCI	;GENERATED LTC IN
LSHI	;LTC SYNCHRINOUS H INPUT
NORM	;NORMAL/BACKUP MODE SELECT
TEST1-TEST9, TEST11	;TEST IN
PBTC	;PLAYBACK LTC IN
RD	;READ IN (NEGATIVE LOGIC)
REF	;REFERENCE OF LTC GENERATOR
VCI1	;LTC CLOCK IN-1
VCI2	;EXTERNAL LTC IN
X1TC	;LTC CLOCK IN-2
XRES	;SYSTEM RESET IN (NEGATIVE LOGIC)
WR	;WRITE IN (NEGATIVE LOGIC)

OUTPUT

BER	;BI-PHASE MARK ERROR (BIT ERROR)
BKO	;BACKUP CONTROL OUT-2 (POSITIVE LOGIC)
CFNG	;COLOR FRAME ERROR FLAG OUT
CK1O	;SYSTEM CLOCK OUT
CK2M	;CLOCK 2M OUT
CS	;CHIP SELECT IN (NEGATIVE LOGIC)
D0-D7	;DATA BUS
DATA	;DEMODULATED SERIAL DATA OUT
DCCK	;LTC DECODE CLOCK OUT
DCLK	;DEMODULATED CLOCK OUT
DLYO	;OUTPUT FROM DELAY CIRCUIT
FRAM	;FRAME SIGNAL OUT -2
HDO	;HORIZONTAL SYNC DRIVE OUT
IFRM	;FRAME SIGNAL OUT -1
INTC	;CTL INTERRUPT OUT (POSITIVE LOGIC)
INTG	;GENERATOR INTERRUPT OUT (POSITIVE LOGIC)
INTL	;READER INTERRUPT -1 OUT (POSITIVE LOGIC)
INTM	;INTERRUPT MIX OUT (POSITIVE LOGIC)
INTR	;READER INTERRUPT -2 OUT (POSITIVE LOGIC)
INTX	;EXTERNAL LTC INTERRUPT OUT (POSITIVE LOGIC)
LREV	;READ REV/FWD BIT OUT
LSHO	;LTC SYNCHRONOUS SIGNAL H OUT
LTCO	;LTC SIGNAL OUT
NT4F, PL4F, PL8F, PM8F	;DEMODULATED COLOR FRAME OUT
OUT	;EXTERNAL OUTPUT LTC OUT
PORT	;PORT
READ	;READ LTC OUT
REC	;RECORD LTC OUT
RSYC	;READ SYNC WORD DATA OUT
VCEO	;LTC CLOCK OUT
VDO	;VERTICAL SYNC DRIVE OUT
X1BE	;BI-PHASE MARK ERROR (NORMAL SPEED READER)
XBK	;BACKUP CONTROL OUT-1 (NEGATIVE LOGIC)
XINT	;INVERTED INTERRUPT MIX OUT (NEGATIVE LOGIC)
XOUT	;INVERTED EXTERNAL OUTPUT LTC OUT

CXK58257AM-10L (SONY)FLAT PACKAGE
CXK58257BM-10LL (SONY)

C-MOS 256K (32,768×8)-BIT STATIC RAM

–TOP VIEW–

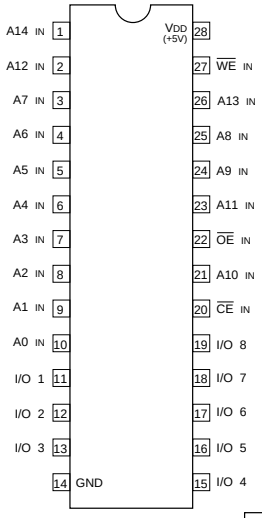

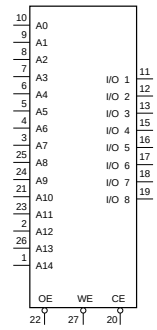

A0-A14	; ADDRESS INPUTS
$\overline{CE}$	; CHIP ENABLE INPUT
I/O1-I/O8	; DATA INPUTS/OUTPUTS
$\overline{OE}$	; OUTPUT ENABLE INPUT
$\overline{WE}$	; WRITE ENABLE INPUT

CE	OE	WE	MODE	I/O TERMINAL
1	×	×	NOT SELECT	HIGH IMPEDANCE
0	1	1	OUTPUT DISABLE	HIGH IMPEDANCE
0	0	1	READ	OUTPUT DATA
0	×	0	WRITE	INPUT DATA

0 ; LOW LEVEL
1 ; HIGH LEVEL
× ; DON'T CARE

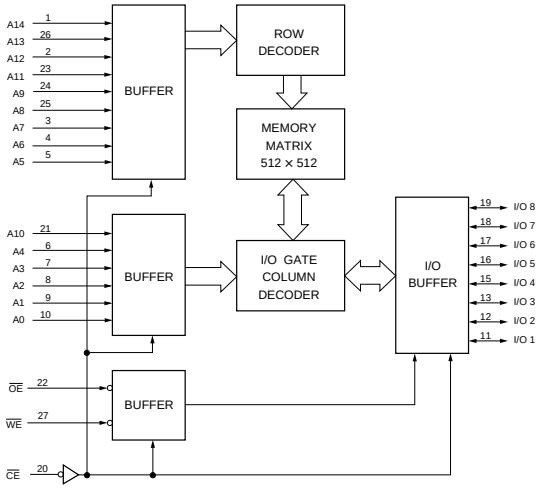

CXD8818R (SONY)

C-MOS MEMORY CONTROLLER

-TOP VIEW-

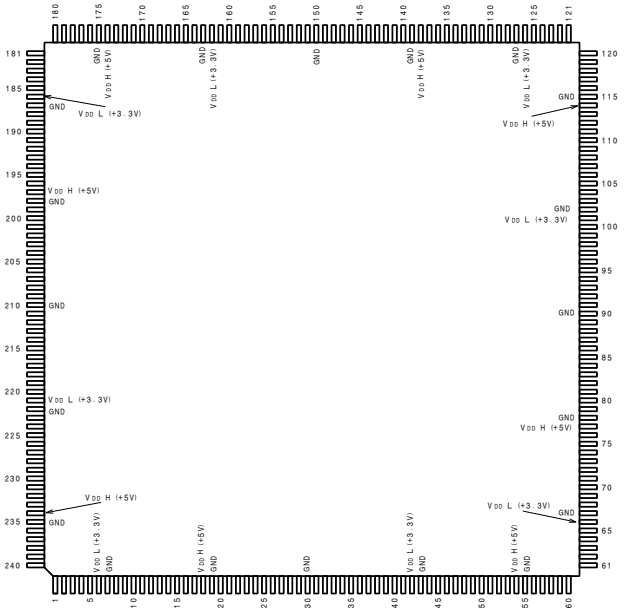

(VDD L = +3.3V, VDD H = +5V)

PIN NO.	I/O	SIGNAL	PIN NO.	I/O	SIGNAL	PIN NO.	I/O	SIGNAL	PIN NO.	I/O	SIGNAL	PIN NO.	I/O	SIGNAL
1	I	M2CF	49	I	DID4	97	I	A2D4	145	O	MWC4	193	I/O	MAD2
2	I	M3D9	50	I	DID3	98	I	A2D3	146	O	MWC3	194	I/O	MAD1
3	I	M3D8	51	I	DID2	99	I	A2D2	147	O	MWC2	195	I/O	MAD0
4	I	M3D7	52	I	DID1	100	I	A2D1	148	O	MWC1	196	O	MPUCK
5	I	M3D6	53	I	DID0	101	–	VDD L	149	O	MWC0	197	–	VDD H
6	–	VDD L	54	–	VDD H	102	–	GND	150	–	GND	198	–	GND
7	–	GND	55	–	GND	103	I	A2D0	151	O	MWCK	199	I	R27
8	I	M3D5	56	I	DIHD	104	I	A2P	152	O	$\overline{\text{MWRST}}$	200	I	ADVCF
9	I	M3D4	57	I	DIVD	105	O	IVST	153	O	$\overline{\text{MRCK}}$	201	I	TEST
10	I	M3D3	58	I	DIP	106	I	M1D9	154	O	$\overline{\text{MRRST}}$	202	O	SRP
11	I	M3D2	59	O	CHD	107	I	M1D8	155	I	RDY9	203	O	REFCF0
12	I	M3D1	60	O	CVD	108	I	M1D7	156	I	RDY8	204	O	REFCF1
13	I	M3D0	61	I	ISY	109	I	M1D6	157	I	RDY7	205	O	REFCF2
14	I	M3HD	62	O	HR	110	I	M1D5	158	I	RDY6	206	I	FNTC
15	I	M3VD	63	I	SFTHR	111	I	M1D4	159	I	RDY5	207	I	$\overline{\text{RST}}$
16	I	M3CF	64	O	SMPP	112	I	M1D3	160	I	RDY4	208	O	R18
17	O	SAVP	65	O	PCEN	113	I	M1D2	161	O	WRSTL	209	O	SUPT
18	–	VDD H	66	–	VDD L	114	–	VDD H	162	–	VDD L	210	–	GND
19	–	GND	67	–	GND	115	–	GND	163	–	GND	211	O	BD9
20	I	DED9	68	I	W27	116	I	M1D1	164	I	RDY3	212	O	BD8
21	I	DED8	69	O	DTHP	117	I	M1D0	165	I	RDY2	213	O	BD7
22	I	DED7	70	O	CH	118	I	M1HD	166	I	RDY1	214	O	BD6
23	I	DED6	71	O	CLPP	119	I	M1VD	167	I	RDY0	215	O	BD5
24	I	DED5	72	I	A1D9	120	I	M1CF	168	I	RDP	216	O	BD4
25	I	DED4	73	I	A1D8	121	O	ICF0	169	I	RDFIN	217	O	BD3
26	I	DED3	74	I	A1D7	122	O	ICF1	170	I	RDC9	218	O	BD2
27	I	DED2	75	I	A1D6	123	O	ICF2	171	I	RDC8	219	O	BD1
28	I	DED1	76	I	A1D5	124	O	MWY9	172	I	RDC7	220	O	BD0
29	I	DED0	77	–	VDD H	125	O	MWY8	173	I	RDC6	221	–	VDD L
30	–	GND	78	–	GND	126	–	VDD L	174	–	VDD H	222	–	GND
31	I	DECCK	79	I	A1D4	127	–	GND	175	–	GND	223	O	BHD
32	I	DEHD	80	I	A1D3	128	O	MWY7	176	I	RDC5	224	O	BVD
33	I	DEVD	81	I	A1D2	129	O	MWY6	177	I	RDC4	225	O	BCF
34	I	DECF	82	I	A1D1	130	O	MWY5	178	I	RDC3	226	O	BP
35	I	DEP	83	I	A1D0	131	O	MWY4	179	I	RDC2	227	I	M2D9
36	I	DICPST	84	I	A1P	132	O	MWY3	180	I	RDC1	228	I	M2D8
37	I	DICR	85	O	YCER	133	O	MWY2	181	I	RDC0	229	I	M2D7
38	I	DICF2	86	O	BCER	134	O	MWY1	182	O	RDRSTL	230	I	M2D6
39	I	DICF1	87	O	RCER	135	O	MWY0	183	I	ASTB	231	I	M2D5
40	I	DICF0	88	O	COE	136	O	MWP	184	I	$\overline{\text{WR}}$	232	I	M2D4
41	I	DIFCK	89	O	HFCK	137	O	MWFIN	185	I	$\overline{\text{RD}}$	233	I	M2D3
42	–	VDD L	90	–	GND	138	–	VDD H	186	–	VDD L	234	–	VDD H
43	–	GND	91	O	QTCK	139	–	GND	187	–	GND	235	–	GND
44	I	DID9	92	I	A2D9	140	O	MWC9	188	I/O	MAD7	236	I	M2D2
45	I	DID8	93	I	A2D8	141	O	MWC8	189	I/O	MAD6	237	I	M2D1
46	I	DID7	94	I	A2D7	142	O	MWC7	190	I/O	MAD5	238	I	M2D0
47	I	DID6	95	I	A2D6	143	O	MWC6	191	I/O	MAD4	239	I	M2HD
48	I	DID5	96	I	A2D5	144	O	MWC5	192	I/O	MAD3	240	I	M2VD

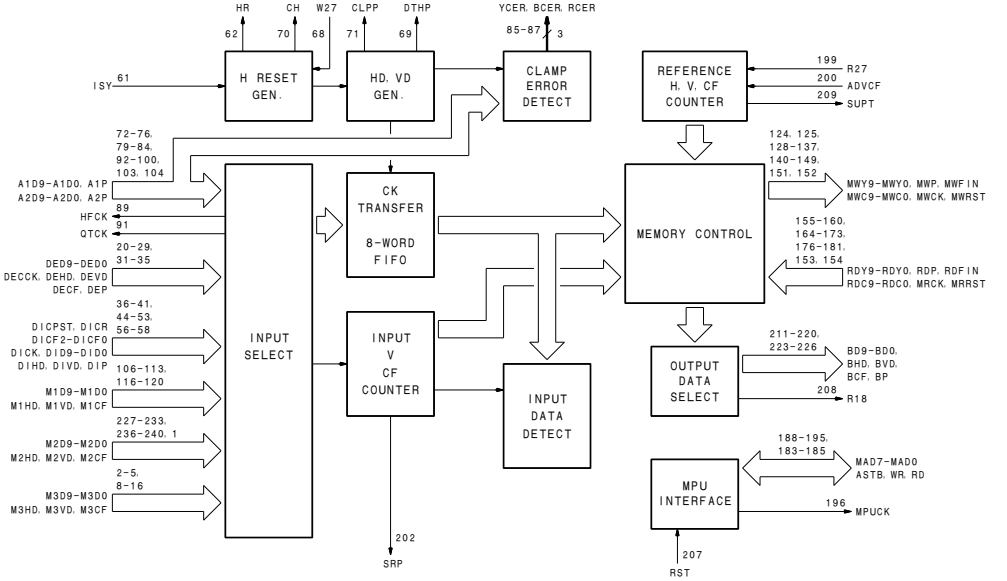

http://getMANUAL.com

INPUT

```
A1D0-9  :A/D CONVERTED Y SIGNAL DATA FROM DIGITAL FILTER
A1P     :A/D CONVERTED Y SIGNAL DATA PARITY
A2D0-9  :A/D CONVERTED R-Y/B-Y SIGNAL DATA FROM DIGITAL FILTER
A2P     :A/D CONVERTED R-Y/B-Y SIGNAL DATA PARITY
ADVCF   :ADVANCED REFERENCE COLOR FRAME
ASTB    :MPU INTERFACE ADDRESS STROBE
DECK    :COMPOSITE DECODER INPUT CLOCK
DECF    :COMPOSITE DECODER INPUT CF
DED0-9  :COMPOSITE DECODER INPUT DATA
DEHD    :COMPOSITE DECODER INPUT HD
DEP     :COMPOSITE DECODER INPUT PARITY
DEVD    :COMPOSITE DECODER INPUT VD
DICF0-2 :DIF (SERIAL DIGITAL) INPUT CF
DICPST  :DIF (SERIAL DIGITAL) INPUT COMPOSITE FLAG (H:COMPOSITE)
DICR    :DIF (SERIAL DIGITAL) INPUT CRCC ERROR FLAG (H:ERROR)
DID0-9  :DIF (SERIAL DIGITAL) INPUT DATA
DIFCK   :DIF (SERIAL DIGITAL) INPUT CLOCK
DIHD    :DIF (SERIAL DIGITAL) INPUT HD
DIP     :DIF (SERIAL DIGITAL) INPUT PARITY
DIVD    :DIF (SERIAL DIGITAL) INPUT VD
FNTC    :FORCED NTSC MODE
ISY     :ANALOG COMPONENT SYNC INPUT
M1CF    :MULTI-LOOP (1) INPUT CF FOR SELF-DIAG.
M1D0-9  :MULTI-LOOP (1) INPUT DATA FOR SELF-DIAG.
M1HD    :MULTI-LOOP (1) INPUT HD FOR SELF-DIAG.
M1VD    :MULTI-LOOP (1) INPUT VD FOR SELF-DIAG.
M2CF    :MULTI-LOOP (2) INPUT CF
M2D0-9  :MULTI-LOOP (2) INPUT DATA
M2HD    :MULTI-LOOP (2) INPUT HD
M2VD    :MULTI-LOOP (2) INPUT VD
M3CF    :MULTI-LOOP (3) INPUT COLOR FRAME FOR SELF-DIAG.
M3D0-9  :MULTI-LOOP (3) INPUT DATA FOR SELF-DIAG.
M3HD    :MULTI-LOOP (3) INPUT HD FOR SELF-DIAG.
M3VD    :MULTI-LOOP (3) INPUT VD FOR SELF-DIAG.
R27     :REFERENCE 27MHz CLOCK
RD      :MPU INTERFACE READ REQUEST
RDC0-9  :MEMORY READ R-Y/B-Y DATA
RDFIN   :MEMORY READ DATA FINISH BLOCK ID BIT
RDP     :MEMORY READ DATA PARITY
RDY0-9  :MEMORY READ Y DATA
RST     :MASTER RESET
SFTHR   :SHIFTED HR INPUT
TEST    :TEST MODE ENABLE
W27     :27MHz CLOCK LOCKED TO ANALOG COMPONENT
WR      :MPU INTERFACE WRITE REQUEST
```

OUTPUT

```
BCER     :B-Y SIGNAL CLAMP ERROR
BCF      :BUFFERED CF
BD0-9    :BUFFERED DATA
BHD      :BUFFERED HD
BP       :BUFFERED PARITY
BVD      :BUFFERED VD
CH       :COUNT H TIMING PULSE FOR PLL
CHD      :ANALOG COMPONENT HD OUTPUT
CLPP     :CLAMP PULSE FOR ANALOG COMPONENT
COE      :ANALOG COMPONENT ODD/EVEN OUTPUT
CVD      :ANALOG COMPONENT VD OUTPUT
DTHP     :DITHER TIMING PULSE FOR A/D DITHER
HFCK     :13.5MHz CLOCK (W27/2) FOR DIGITAL FILTER
HR       :PHASE COMPARATOR PULSE OUT FOR PLL
ICF0-2   :SELECTED INPUT SIGNAL COLOR FRAME
IVST     :SELECTED INPUT SIGNAL V-START PULSE
MPUCK    :MPU INTERFACE CLOCK (9MHz)
MRCK     :MEMORY READ CLOCK
MRRST    :MEMORY READ RESET PULSE
MWC0-9   :MEMORY R-Y/B-Y DATA OUTPUT
MWCK     :MEMORY WRITE CLOCK
MWFIN    :MEMORY WRITE DATA FINISH BLOCK ID BIT
MWP      :MEMORY WRITE DATA PARITY OUTPUT
MWRST    :MEMORY WRITE RESET PULSE
MWY0-9   :MEMORY WRITE Y DATA OUTPUT
PCEN     :PHASE COMPARATE ENABLE
QTCK     :6.75MHz CLOCK (W27/4) FOR DIGITAL FILTER
R18      :18MHz CLOCK OUTPUT FOR PLAYER SELF-DIAG.
RCER     :R-Y SIGNAL CLAMP ERROR
RDRSTL   :MEMORY READ RESET LINE
REFCF0-2 :REFERENCE CF
SAVP     :SELECTED INPUT SIGNAL SAV TIMING PULSE
SMPP     :SAMPLING PULSE FOR PLL
SRP      :SERVO REFERENCE PULSE
SUPT     :TIMING PULSE FOR SET-UP REMOVER
WRSTL    :MEMORY WRITE RESET LINE
YCER     :Y SIGNAL CLAMP ERROR
```

INPUT/OUTPUT

```
MAD0-7   :MPU INTERFACE DATA BUS
```

CXD8821Q (SONY)

C-MOS AUDIO TIMING GENERATOR
—TOP VIEW—

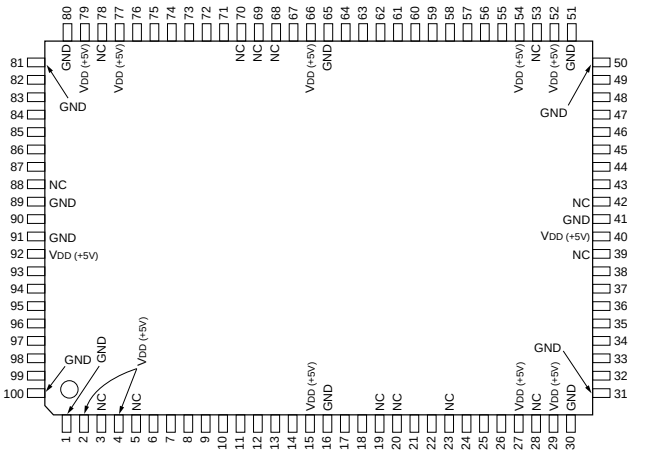

(VDD = +5V)

PIN No.	I/O	SIGNAL	PIN No.	I/O	SIGNAL	PIN No.	I/O	SIGNAL	PIN No.	I/O	SIGNAL
1	—	GND	26	I	T1	51	—	GND	76	O	DCK2
2	—	VDD	27	—	VDD	52	—	VDD	77	—	VDD
3	—	NC	28	—	NC	53	—	NC	78	—	NC
4	—	VDD	29	—	VDD	54	—	VDD	79	—	VDD
5	—	NC	30	—	GND	55	I	CRN	80	—	GND
6	O	FA2	31	—	GND	56	I	CFPI	81	—	GND
7	O	FA1	32	O	DE0	57	I	SA0	82	O	HD2
8	O	FA0	33	O	DE7	58	I	SA1	83	O	VD2
9	O	PC2	34	O	DE8	59	I	SA2	84	O	CF2
10	O	PC1	35	O	FP0	60	I	SA3	85	O	HD3
11	O	PC0	36	O	FP5	61	I	SCK	86	O	VD3
12	O	LOCK	37	O	FP6	62	I	STB	87	O	CF3
13	O	FREF	38	O	FP7	63	I	SI	88	—	NC
14	O	FCOMP	39	—	NC	64	O	SO	89	—	GND
15	—	VDD	40	—	VDD	65	—	GND	90	I	CLK
16	—	GND	41	—	GND	66	—	VDD	91	—	GND
17	I	FSCK	42	—	NC	67	O	TO	92	—	VDD
18	I	FPCK	43	O	FP8	68	—	NC	93	O	DCK4
19	—	NC	44	O	FS0	69	—	NC	94	O	HD4
20	—	NC	45	O	FS5	70	—	NC	95	O	VD4
21	I	ACS	46	O	FS6	71	O	HD0	96	O	CF4
22	I	INCF	47	O	FS7	72	O	VD0	97	O	HD5
23	—	NC	48	O	FS8	73	O	FOE1	98	O	VD5
24	I	T3	49	O	FS9	74	O	HD1	99	O	CF5
25	I	T2	50	—	GND	75	O	VD1	100	—	GND

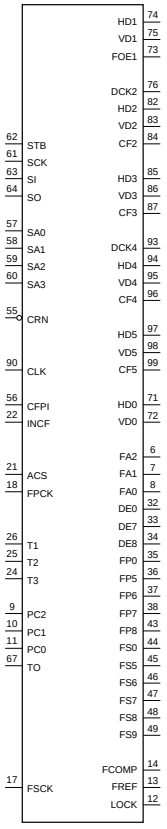

INPUT

ACS ; H: 48 kHz AUDIO L: 44.1 kHz AUDIO
CFPI ; INPUT CF PULSE
CLK ; CLOCK
CRN ; POWER ON RESET
FPCK ; AUDIO CLOCK (256FS) FOR PROGRAM PLAY
FSCK ; AUDIO CLOCK (512FS)
INCF ; CF SIGNAL FOR VD2 REFORMING
SA0 –3 ; SERIAL PRESET ADDRESS
SCK ; SERIAL CLOCK
SI ; SERIAL INPUT DATA
STB ; SERIAL START PULSE
T1 – T3 ; TEST PIN FOR IC

OUTPUT

CF2 ; CF INFORMATION PULSE OF THE #2 GROUP (PROGRAMABLE)
CF3 ; CF INFORMATION PULSE OF THE #3 GROUP (PROGRAMABLE)
CF4 ; CF INFORMATION PULSE OF THE #4 GROUP (PROGRAMABLE)
CF5 ; CF INFORMATION PULSE OF THE #5 GROUP (PROGRAMABLE)
DCK2 ; 13.5 MHz CLOCK OF THE #2 GROUP (PROGRAMABLE)
DCK4 ; 13.5 MHz CLOCK OF THE #4 GROUP (PROGRAMABLE)
DE0 – 8 ; AUDIO CLOCK FOR PITCH CONTROL
FA0 – 2 ; AUDIO 5-FIELD SEQ. ID
FCOMP ; AUDIO CLOCK FOR PLL
FOE1 ; ODD/EVEN SIGNAL OF THE #1 GROUP (PROGRAMABLE)
FP0 – 8 ; AUDIO CLOCK FOR PROGRAM PLAY
FREF ; REFERENCE CLOCK FOR AUDIO PLL
FS0 – 9 ; AUDIO CLOCK (FS9: 512FS)
HD0 ; HD PULSE (UNPROGRAMABLE)
HD1 ; HD PULSE OF THE #1 GROUP (PROGRAMABLE)
HD2 ; HD PULSE OF THE #2 GROUP (PROGRAMABLE)
HD3 ; HD PULSE OF THE #3 GROUP (PROGRAMABLE)
HD4 ; HD PULSE OF THE #4 GROUP (PROGRAMABLE)
HD5 ; HD PULSE OF THE #5 GROUP (PROGRAMABLE)
LOCK ; AUDIO PLL LOCK DET
PC0 –2 ; TEST PIN FOR IC
SO ; SERIAL OUTPUT DATA
TO ; TEST PIN FOR IC
VD0 ; VD PULSE (UNPROGRAMABLE)
VD1 ; VD PULSE OF THE #1 GROUP (PROGRAMABLE)
VD2 ; VD PULSE OF THE #2 GROUP (PROGRAMABLE)
VD3 ; VD PULSE OF THE #3 GROUP (PROGRAMABLE)
VD4 ; VD PULSE OF THE #4 GROUP (PROGRAMABLE)
VD5 ; VD PULSE OF THE #5 GROUP (PROGRAMABLE)

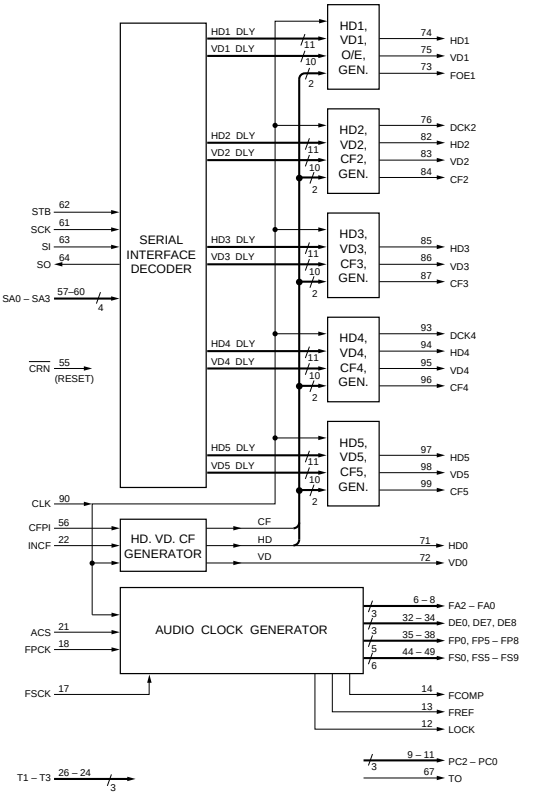

DS1000Z-100 (DALLAS SEMICONDUCTOR)FLAT PACKAGE
DS1000Z-100(TE2)

C-MOS DELAY LINE
-TOP VIEW-

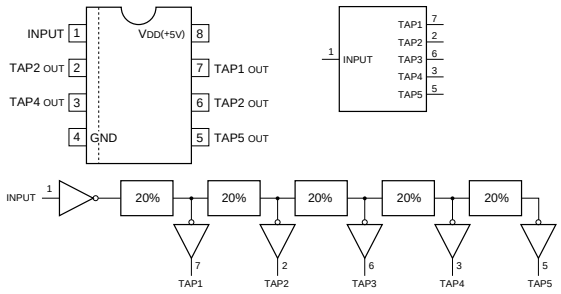

TYPE. NO.	DELAY TIME (ns)				
	TAP1	TAP2	TAP3	TAP4	TAP5
DS1000M-50	10	20	30	40	50
DS1000M-60	12	24	36	48	60
DS1000M-75	15	30	45	60	75
DS1000M-100	20	40	60	80	100
DS1000M-125	25	50	75	100	125
DS1000M-150	30	60	90	120	150
DS1000M-175	35	70	105	140	175
DS1000M-200	40	80	120	160	200
DS1000M-250	50	100	150	200	250
DS1000M-500	100	200	300	400	500
DS1000Z-25	5	10	15	20	25
DS1000Z-100	20	40	60	80	100

DS1302Z (DALLAS)FLAT PACKAGE
DS1302Z-TE2

REAL TIME CLOCK
-TOP VIEW-

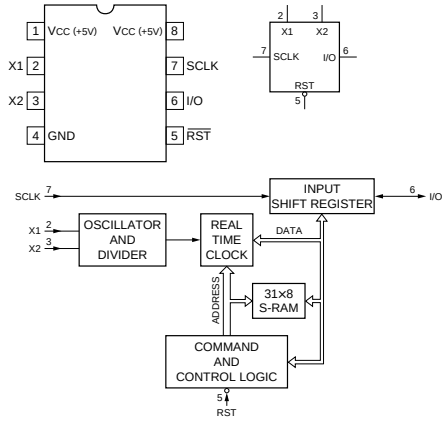

EL4581CS-TE2 (ELT)FLAT PACKAGE

VIDEO SYNC SEPARATOR
— TOP VIEW —

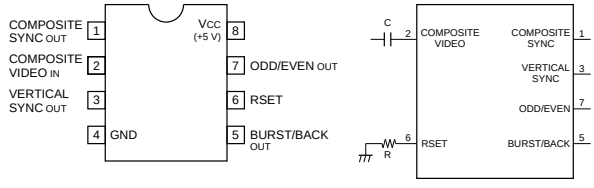

TIMING CHART

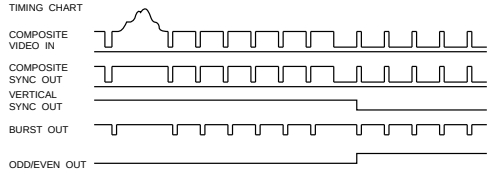

HA11423MP (HITACHI)FLAT PACKAGE

TV H/V SYNC SIGNAL PROCESSOR
-TOP VIEW-

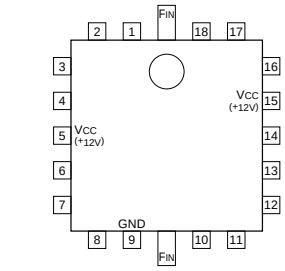

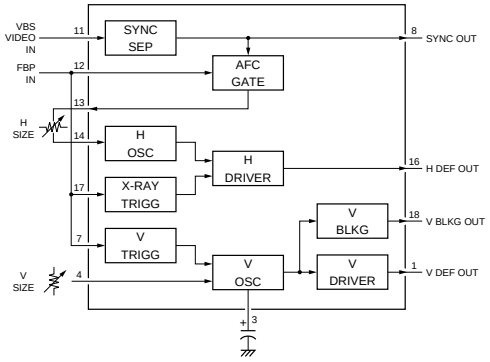

HD151015T (HITACHI)FLAT PACKAGE
HD151015TEL

C-MOS 9-BIT LEVEL SHIFTER/TRANSCEIVER WITH 3-STATE OUTPUTS
— TOP VIEW —

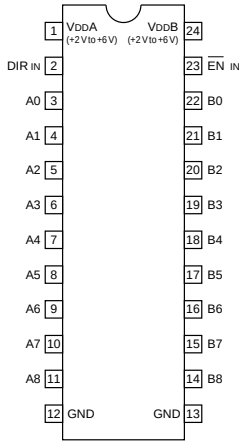

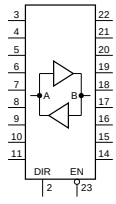

EN	DIR	OPERATION
0	0	B to A
0	1	A to B
1	X	HI-Z

0 ; LOW LEVEL
1 ; HIGH LEVEL
X ; DON'T CARE
HI-Z ; HIGH IMPEDANCE

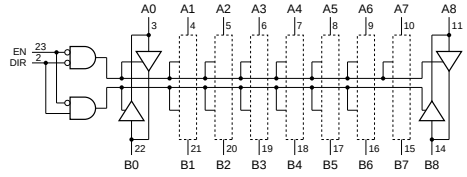

HD6473308RF10 (HITACHI)FLAT PACKAGE

C-MOS 8-BIT SINGLE CHIP MICROCOMPUTER

–TOP VIEW–

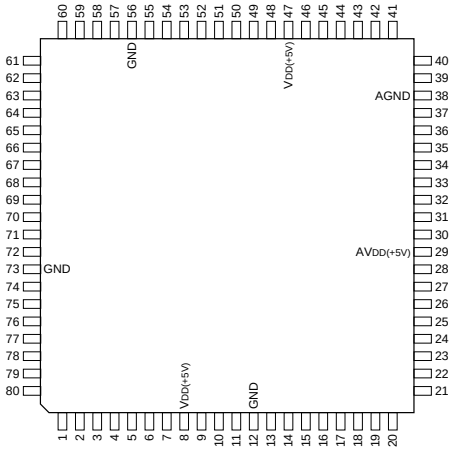

PIN NO.	I/O	SIGNAL	PIN NO.	I/O	SIGNAL	PIN NO.	I/O	SIGNAL	PIN NO.	I/O	SIGNAL
1	I	$\overline{RES}$	21	I/O	P60/FTCI	41	I/O	P42/TMRI0	61	I/O	P13/A3
2	I	XTAL	22	I/O	P61/FTOA	42	I/O	P43/TMCI1	62	I/O	P12/A2
3	I	EXTAL	23	I/O	P62/FTIA	43	I/O	P44/TMO1	63	I/O	P11/A1
4	I	MD1	24	I/O	P63/FTIB	44	I/O	P45/TMRI1	64	I/O	P10/A0
5	I	MD0	25	I/O	P64/FTIC	45	I/O	P46/PW0	65	I/O	P30/DDB0/D0
6	I	$\overline{NMI}$	26	I/O	P65/FTID	46	I/O	P47/PW1	66	I/O	P31/DDB1/D1
7	I	$\overline{STBY}$	27	I/O	P66/FTOB/$\overline{IRQ6}$	47	—	VDD	67	I/O	P32/DDB2/D2
8	—	VDD	28	I/O	P67/$\overline{IRQ7}$	48	I/O	P27/A15	68	I/O	P33/DDB3/D3
9	I/O	P52/ASCK	29	—	AVDD	49	I/O	P26/A14	69	I/O	P34/DDB4/D4
10	I/O	P51/ARXD	30	I	P70/AN0	50	I/O	P25/A13	70	I/O	P35/DDB5/D5
11	I/O	P50/ATXD	31	I	P71/AN1	51	I/O	P24/A12	71	I/O	P36/DDB6/D6
12	—	GND	32	I	P72/AN2	52	I/O	P23/A11	72	I/O	P37/DDB7/D7
13	I/O	P97/$\overline{WE}$/$\overline{WAIT}$	33	I	P73/AN3	53	I/O	P22/A10	73	—	GND
14	I/O	P96/Ø	34	I	P74/AN4	54	I/O	P21/A9	74	I/O	P80/RS0/E
15	I/O	P95/$\overline{RDY}$/$\overline{AS}$	35	I	P75/AN5	55	I/O	P20/A8	75	I/O	P81/RS1/$\overline{IOS}$
16	I/O	P94/$\overline{OE}$/$\overline{WR}$	36	I	P76/AN6	56	—	GND	76	I/O	P82/RS2
17	I/O	P93/$\overline{CS}$/$\overline{RD}$	37	I	P77/AN7	57	I/O	P17/A7	77	I/O	P83/RS3
18	I/O	P92/$\overline{IRQ0}$	38	—	AGND	58	I/O	P16/A6	78	I/O	P84/CTXD/$\overline{IRQ3}$
19	I/O	P91/$\overline{IRQ1}$	39	I/O	P40/TMCI0	59	I/O	P15/A5	79	I/O	P85/CRXD/$\overline{IRQ4}$
20	I/O	P90/$\overline{ADTRG}$/$\overline{IRQ2}$	40	I/O	P41/TMO0	60	I/O	P14/A4	80	I/O	P86/CSCK/$\overline{IRQ5}$

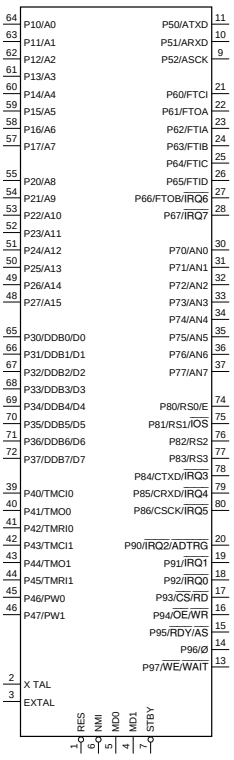

INPUT

A15 - A0	;	ADDRESS BUS
ADTRG	;	A/D CONVERSION EXIT TRIGGER
AN7 - AN0	;	ANALOG
ARXD, CRXD	;	RECEIVE DATA
CS	;	CHIP SELECT
FTCI	;	FREE RUNNING TIMER CLOCK
IRQ0 - IRQ7	;	INTERRUPT REQUEST
MD0, MD1	;	MODE
NMI	;	INTERRUPT FOR NO MASKING
OE	;	OUTPUT ENABLE
P77 - P70	;	PORT 7
RES	;	RESET
RS3 - RS0	;	REGISTER SELECT
STBY	;	STANDBY
TMCI0, TMCI1	;	8-BIT TIMER CLOCK
TMRI0, TMRI1	;	8-BIT TIMER COUNTER RESET
XTAL, EXTAL	;	CRYSTAL
WAIT	;	WAIT
WE	;	WRITE ENABLE

OUTPUT

ATXD, CTXD	;	TRANSMIT DATA
AS	;	ADDRESS STROBE
E	;	ENABLE CLOCK
FTOA, FTOB	;	FREE RUNNING TIMER COMPARE
IOS	;	I/O SELECT
PW0, PW1	;	PWM TIMER
RD	;	READ
RDY	;	READY
TMO0, TMO1	;	8-BIT TIMER
WR	;	WRITE
Ø	;	SYSTEM CLOCK

INPUT/OUTPUT

ASCK, CSCK	;	SERIAL CLOCK
D7 - D0	;	DATA BUS
DDB7 - DDB0	;	DPRAM DATA BUS
P17 - P10	;	PORT 1
P27 - P20	;	PORT 2
P37 - P30	;	PORT 3
P47 - P40	;	PORT 4
P52 - P50	;	PORT 5
P67 - P60	;	PORT 6
P86 - P80	;	PORT 8
P97 - P90	;	PORT 9

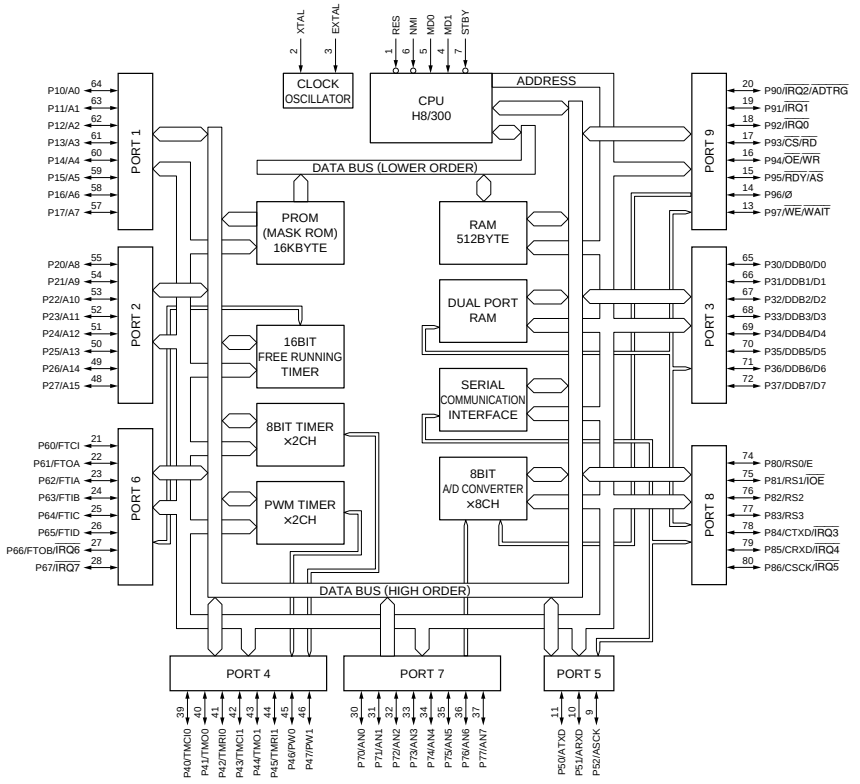

LA7205M (SANYO)
LA7205M-TE-L

TAPE TOP / END DETECTOR
-TOP VIEW-

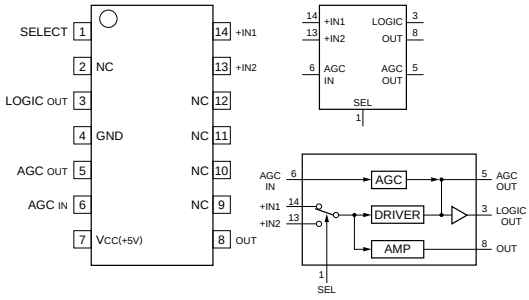

LB1843V-TLM (SANYO)FLAT PACKAGE

FORWARD/REVERSE MOTOR DRIVER
-TOP VIEW-

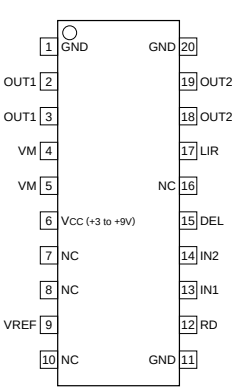

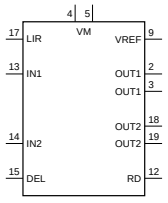

INPUTS

DEL	;	OUTPUT LIMIT ON/OFF
IN 1, 2	;	MODE SELECT
LIR	;	OUTPUT LIMIT DETECT VOLTAGE
VM	;	MOTOR DRIVE VOLTAGE

OUTPUT

OUT 1, 2	;	MOTOR DRIVE
RD	;	OUTPUT LIMIT SIGNAL
V REF	;	REFERENCE VOLTAGE

INPUT		OUTPUT		MODE
IN2	IN1	OUT2	OUT1	
0	0	OFF	OFF	WAITING
0	1	0	1	FWD
1	0	1	0	REV
1	1	0	0	BRAKING

0 ; LOW LEVEL
1 ; HIGH LEVEL

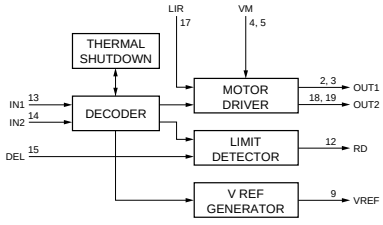

LM334MX (NS)FLAT PACKAGE

ADJUSTABLE CURRENT SOURCE
– TOP VIEW –

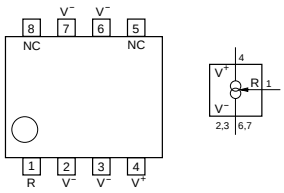

LB1857M-TE-L (SANYO)FLAT PACKAGE

3-PHASE BRUSHLESS MOTOR DRIVER
-TOP VIEW-

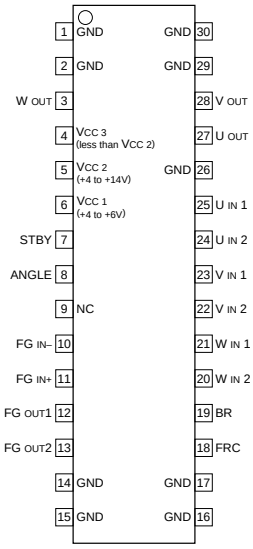

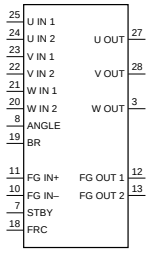

INPUTS

ANGLE	;	INPUT/OUTPUT GAIN CONTROL
BR	;	MOTOR CONTROL (L:DRIVE/H:STOP)
FG +/–	;	FG SIGNAL
FRC	;	MOTOR FORWARD/REVERSE CONTROL(L:FWD/H:REV)
STBY	;	STANDBY (L:STANDBY)
U 1/2, V 1/2, W 1/2	;	CONTROL

OUTPUT

FG 1/2	;	FG AMP
U, V, W	;	OUTPUTS

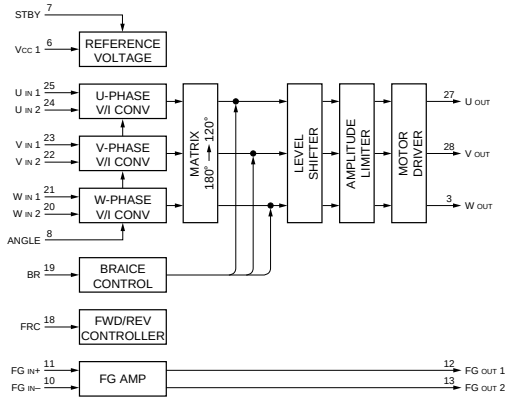

LM1881M (NS)FLAT PACKAGE

VIDEO SYNC SEPARATOR
—TOP VIEW—

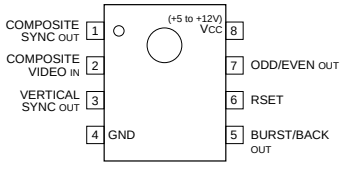

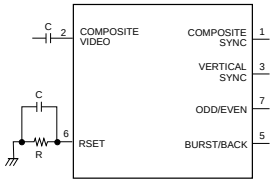

TIMING CHART

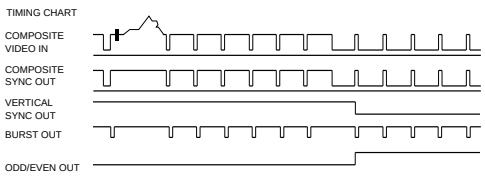

HD6475368SCG16 (HITACHI)

C-MOS 16-BIT MICROCOMPUTER

–TOP VIEW–

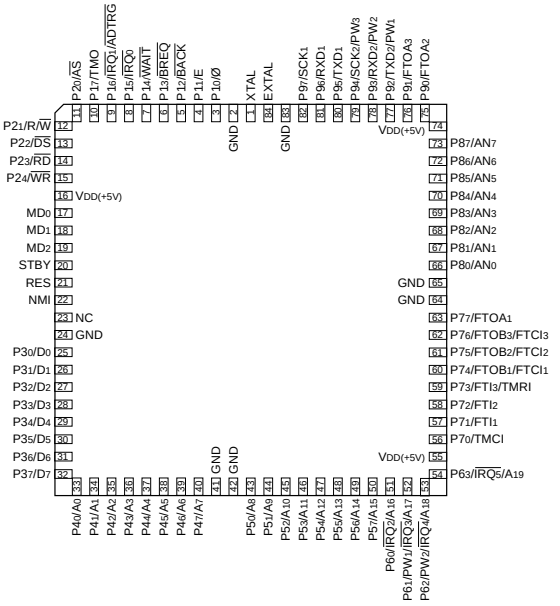

MODE1

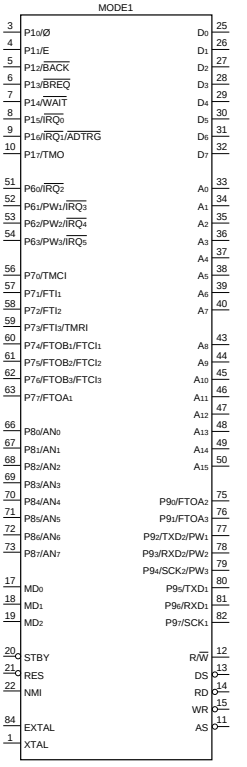

MODE2

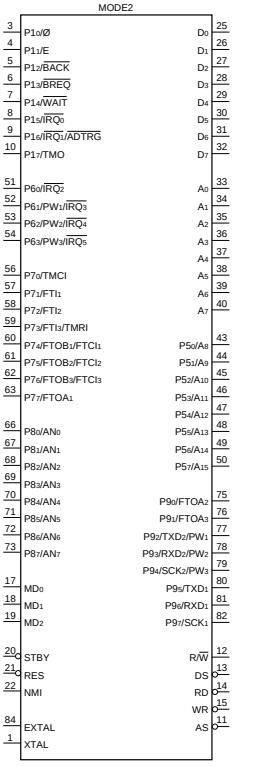

MODE7

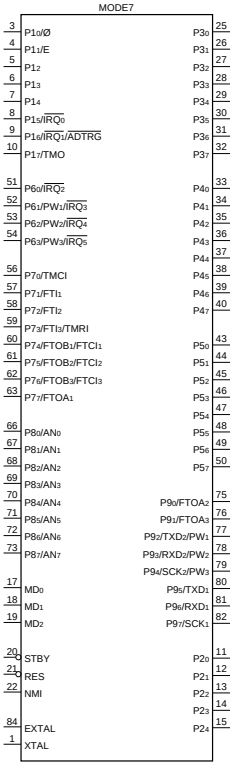

MODE3

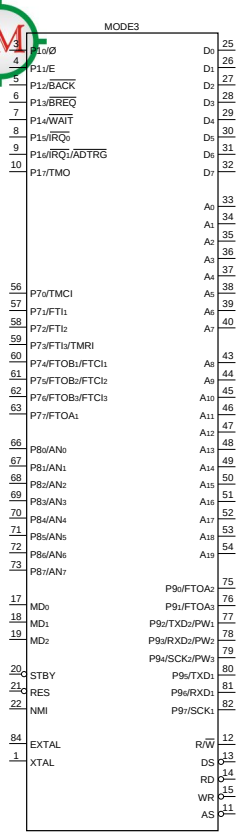

MODE4

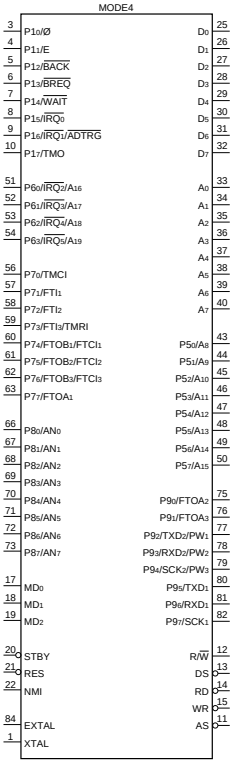

INPUT

$\overline{ADTRG}$	;	EXTERNAL TRIGGER
AN0 - AN7	;	ANALOG
$\overline{BREQ}$	;	BUS RIGHT REQUEST
EXTAL	;	CRYSTAL OSCILLATOR
FTI1 - FTI3	;	FREE RUNNING TIMER INPUT CAPTURE (CH1 - CH3)
FTCI1 - FCTI3	;	FREE RUNNING TIMER COUNTER CLOCK (CH1 - CH3)
$\overline{IRQ0}$ - $\overline{IRQ5}$	;	INTERRUPT REQUEST
MD0 - MD2	;	MODE SET UP (*1)
NMI	;	NON-MASKABLE INTERRUPT
P8 (0 - 7)	;	PORT 8
RXD 1, RXD 2	;	RECEIVE DATA (CH1, CH2)
$\overline{STBY}$	;	STANDBY
TMCI	;	8-BIT TIMER CLOCK
TMRI	;	8-BIT TIMER COUNTER RESET
$\overline{WAIT}$	;	WAIT
XTAL	;	CRYSTAL OSCILLATOR

OUTPUT

A0 - A19	;	ADDRESS BUS
$\overline{AS}$	;	ADDRESS STROBE
$\overline{BACK}$	;	BUS RIGHT REQUEST ACKNOWLEDGE
$\overline{DS}$	;	DATA STROBE
E	;	ENABLE CLOCK
FTOA1 - FTOA3	;	FREE RUNNING TIMER OUTPUT COMPARE A (CH1 - CH3)
FTOB1 - FTOB3	;	FREE RUNNING TIMER OUTPUT COMPARE B (CH1 - CH3)
PW1 - PW3	;	PWM TIMER (CH1 - CH3)
$\overline{RD}$	;	READ
R/$\overline{W}$	;	READ/WRITE
TMO	;	8-BIT TIMER
TXD1, TXD2	;	TRANSMISSION DATA (CH1, CH2)
$\overline{WR}$	;	WRITE
Ø	;	SYSTEM CLOCK

INPUT/OUTPUT

D0 - D7	;	DATA BUS
P1 (0 - 7)	;	PORT 1
P2 (0 - 4)	;	PORT 2
P3 (0 - 7)	;	PORT 3
P4 (0 - 7)	;	PORT 4
P5 (0 - 7)	;	PORT 5
P6 (0 - 3)	;	PORT 6
P7 (0 - 7)	;	PORT 7
P9 (0 - 7)	;	PORT 9
$\overline{RES}$	;	RESET
SCK1, SCK2	;	SERIAL CLOCK (CH1, CH2)

(*1)

INPUTS			OPERATION MODE	CONTENTS
MD2	MD1	MD0		
0	0	1	MODE 1	EXTENSION MINIMUM (ROM DISABLE)
0	1	0	MODE 2	EXTENSION MINIMUM (ROM ENABLE)
0	1	1	MODE 3	EXTENSION MAXIMUM (ROM DISABLE)
1	0	0	MODE 4	EXTENSION MAXIMUM (ROM ENABLE)
1	1	1	MODE 7	SINGLE CHIP MODE

(V_{DD}=+5V)

PIN NO.	EXTENSION MINIMUM MODE				EXTENSION MAXIMUM MODE				SINGLE CHIP MODE
	MODE1		MODE2		MODE3		MODE4		MODE7
	I/O	SIGNAL	I/O	SIGNAL	I/O	SIGNAL	I/O	SIGNAL	I/O	SIGNAL
1	I	XTAL	I	XTAL	I	XTAL	I	XTAL	I	XTAL
2	—	GND	—	GND	—	GND	—	GND	—	GND
3	I/O	P10/Ø	I/O	P10/Ø	I/O	P10/Ø	I/O	P10/Ø	I/O	P10/Ø
4	I/O	P11/E	I/O	P11/E	I/O	P11/E	I/O	P11/E	I/O	P11/E
5	I/O	P12/$\overline{BACK}$	I/O	P12/$\overline{BACK}$	I/O	P12/$\overline{BACK}$	I/O	P12/$\overline{BACK}$	I/O	P12
6	I/O	P13/$\overline{BREQ}$	I/O	P13/$\overline{BREQ}$	I/O	P13/$\overline{BREQ}$	I/O	P13/$\overline{BREQ}$	I/O	P13
7	I/O	P14/$\overline{WAIT}$	I/O	P14/$\overline{WAIT}$	I/O	P14/$\overline{WAIT}$	I/O	P14/$\overline{WAIT}$	I/O	P14
8	I/O	P15/$\overline{IRQ_0}$	I/O	P15/$\overline{IRQ_0}$	I/O	P15/$\overline{IRQ_0}$	I/O	P15/$\overline{IRQ_0}$	I/O	P15/$\overline{IRQ_0}$
9	I/O	P16/$\overline{IRQ_1}$/ADTRG	I/O	P16/$\overline{IRQ_1}$/ADTRG	I/O	P16/$\overline{IRQ_1}$/ADTRG	I/O	P16/$\overline{IRQ_1}$/ADTRG	I/O	P16/$\overline{IRQ_1}$/ADTRG
10	I/O	P17/TMO	I/O	P17/TMO	I/O	P17/TMO	I/O	P17/TMO	I/O	P17/TMO
11	O	$\overline{AS}$	O	$\overline{AS}$	O	$\overline{AS}$	O	$\overline{AS}$	I/O	P20
12	O	R/$\overline{W}$	O	R/$\overline{W}$	O	R/$\overline{W}$	O	R/$\overline{W}$	I/O	P21
13	O	$\overline{DS}$	O	$\overline{DS}$	O	$\overline{DS}$	O	$\overline{DS}$	I/O	P22
14	O	$\overline{RD}$	O	$\overline{RD}$	O	$\overline{RD}$	O	$\overline{RD}$	I/O	P23
15	O	$\overline{WR}$	O	$\overline{WR}$	O	$\overline{WR}$	O	$\overline{WR}$	I/O	P24
16	—	V_{DD}	—	V_{DD}	—	V_{DD}	—	V_{DD}	—	V_{DD}
17	I	MD_0	I	MD_0	I	MD_0	I	MD_0	I	MD_0
18	I	MD_1	I	MD_1	I	MD_1	I	MD_1	I	MD_1
19	I	MD_2	I	MD_2	I	MD_2	I	MD_2	I	MD_2
20	I	$\overline{STBY}$	I	$\overline{STBY}$	I	$\overline{STBY}$	I	$\overline{STBY}$	I	$\overline{STBY}$
21	I/O	$\overline{RES}$	I/O	$\overline{RES}$	I/O	$\overline{RES}$	I/O	$\overline{RES}$	I/O	$\overline{RES}$
22	I	NMI	I	NMI	I	NMI	I	NMI	I	NMI
23	—	NC	—	NC	—	NC	—	NC	—	NC
24	—	GND	—	GND	—	GND	—	GND	—	GND
25	I/O	D_0	I/O	D_0	I/O	D_0	I/O	D_0	I/O	P30
26	I/O	D_1	I/O	D_1	I/O	D_1	I/O	D_1	I/O	P31
27	I/O	D_2	I/O	D_2	I/O	D_2	I/O	D_2	I/O	P32
28	I/O	D_3	I/O	D_3	I/O	D_3	I/O	D_3	I/O	P33
29	I/O	D_4	I/O	D_4	I/O	D_4	I/O	D_4	I/O	P34
30	I/O	D_5	I/O	D_5	I/O	D_5	I/O	D_5	I/O	P35
31	I/O	D_6	I/O	D_6	I/O	D_6	I/O	D_6	I/O	P36
32	I/O	D_7	I/O	D_7	I/O	D_7	I/O	D_7	I/O	P37
33	O	A_0	O	A_0	O	A_0	O	A_0	I/O	P40
34	O	A_1	O	A_1	O	A_1	O	A_1	I/O	P41
35	O	A_2	O	A_2	O	A_2	O	A_2	I/O	P42
36	O	A_3	O	A_3	O	A_3	O	A_3	I/O	P43
37	O	A_4	O	A_4	O	A_4	O	A_4	I/O	P44
38	O	A_5	O	A_5	O	A_5	O	A_5	I/O	P45
39	O	A_6	O	A_6	O	A_6	O	A_6	I/O	P46
40	O	A_7	O	A_7	O	A_7	O	A_7	I/O	P47
41	—	GND	—	GND	—	GND	—	GND	—	GND
42	—	GND	—	GND	—	GND	—	GND	—	GND

(V_{DD}=+5V)

PIN NO.	EXTENSION MINIMUM MODE				EXTENSION MAXIMUM MODE				SINGLE CHIP MODE	
	MODE1		MODE2		MODE3		MODE4		MODE7	
	I/O	SIGNAL	I/O	SIGNAL	I/O	SIGNAL	I/O	SIGNAL	I/O	SIGNAL
43	O	A_8	I/O	P50/A_8	O	A_8	I/O	P50/A_8	I/O	P50
44	O	A_9	I/O	P51/A_9	O	A_9	I/O	P51/A_9	I/O	P51
45	O	A_{10}	I/O	P52/A_{10}	O	A_{10}	I/O	P52/A_{10}	I/O	P52
46	O	A_{11}	I/O	P53/A_{11}	O	A_{11}	I/O	P53/A_{11}	I/O	P53
47	O	A_{12}	I/O	P54/A_{12}	O	A_{12}	I/O	P54/A_{12}	I/O	P54
48	O	A_{13}	I/O	P55/A_{13}	O	A_{13}	I/O	P55/A_{13}	I/O	P55
49	O	A_{14}	I/O	P56/A_{14}	O	A_{14}	I/O	P56/A_{14}	I/O	P56
50	O	A_{15}	I/O	P57/A_{15}	O	A_{15}	I/O	P57/A_{15}	I/O	P57
51	I/O	P60/$\overline{IRQ_2}$	I/O	P60/$\overline{IRQ_2}$	O	A_{16}	I/O	P60/$\overline{IRQ_2}$/A_{16}	I/O	P60/$\overline{IRQ_2}$
52	I/O	P61/PW1/$\overline{IRQ_3}$	I/O	P61/PW1/$\overline{IRQ_3}$	O	A_{17}	I/O	P61/$\overline{IRQ_3}$/A_{17}	I/O	P61/PW1/$\overline{IRQ_3}$
53	I/O	P62/PW2/$\overline{IRQ_4}$	I/O	P62/PW2/$\overline{IRQ_4}$	O	A_{18}	I/O	P62/$\overline{IRQ_4}$/A_{18}	I/O	P62/PW2/$\overline{IRQ_4}$
54	I/O	P63/PW3/$\overline{IRQ_5}$	I/O	P63/PW3/$\overline{IRQ_5}$	O	A_{19}	I/O	P63/$\overline{IRQ_5}$/A_{19}	I/O	P63/PW3/$\overline{IRQ_5}$
55	—	V_{DD}	—	V_{DD}	—	V_{DD}	—	V_{DD}	—	V_{DD}
56	I/O	P70/TMCI	I/O	P70/TMCI	I/O	P70/TMCI	I/O	P70/TMCI	I/O	P70/TMCI
57	I/O	P71/FTI_1	I/O	P71/FTI_1	I/O	P71/FTI_1	I/O	P71/FTI_1	I/O	P71/FTI_1
58	I/O	P72/FTI_2	I/O	P72/FTI_2	I/O	P72/FTI_2	I/O	P72/FTI_2	I/O	P72/FTI_2
59	I/O	P73/FTI_3/TMRI	I/O	P73/FTI_3/TMRI	I/O	P73/FTI_3/TMRI	I/O	P73/FTI_3/TMRI	I/O	P73/FTI_3/TMRI
60	I/O	P74/$FTOB_1$/$FTCI_1$	I/O	P74/$FTOB_1$/$FTCI_1$	I/O	P74/$FTOB_1$/$FTCI_1$	I/O	P74/$FTOB_1$/$FTCI_1$	I/O	P74/$FTOB_1$/$FTCI_1$
61	I/O	P75/$FTOB_2$/$FTCI_2$	I/O	P75/$FTOB_2$/$FTCI_2$	I/O	P75/$FTOB_2$/$FTCI_2$	I/O	P75/$FTOB_2$/$FTCI_2$	I/O	P75/$FTOB_2$/$FTCI_2$
62	I/O	P76/$FTOB_3$/$FTCI_3$	I/O	P76/$FTOB_3$/$FTCI_3$	I/O	P76/$FTOB_3$/$FTCI_3$	I/O	P76/$FTOB_3$/$FTCI_3$	I/O	P76/$FTOB_3$/$FTCI_3$
63	I/O	P77/$FTOA_1$	I/O	P77/$FTOA_1$	I/O	P77/$FTOA_1$	I/O	P77/$FTOA_1$	I/O	P77/$FTOA_1$
64	—	AGND	—	AGND	—	AGND	—	AGND	—	AGND
65	—	AGND	—	AGND	—	AGND	—	AGND	—	AGND
66	I	P80/AN_0	I	P80/AN_0	I	P80/AN_0	I	P80/AN_0	I	P80/AN_0
67	I	P81/AN_1	I	P81/AN_1	I	P81/AN_1	I	P81/AN_1	I	P81/AN_1
68	I	P82/AN_2	I	P82/AN_2	I	P82/AN_2	I	P82/AN_2	I	P82/AN_2
69	I	P83/AN_3	I	P83/AN_3	I	P83/AN_3	I	P83/AN_3	I	P83/AN_3
70	I	P84/AN_4	I	P84/AN_4	I	P84/AN_4	I	P84/AN_4	I	P84/AN_4
71	I	P85/AN_5	I	P85/AN_5	I	P85/AN_5	I	P85/AN_5	I	P85/AN_5
72	I	P86/AN_6	I	P86/AN_6	I	P86/AN_6	I	P86/AN_6	I	P86/AN_6
73	I	P87/AN_7	I	P87/AN_7	I	P87/AN_7	I	P87/AN_7	I	P87/AN_7
74	—	AV_{DD}	—	AV_{DD}	—	AV_{DD}	—	AV_{DD}	—	AV_{DD}
75	I/O	P90/$FTOA_2$	I/O	P90/$FTOA_2$	I/O	P90/$FTOA_2$	I/O	P90/$FTOA_2$	I/O	P90/$FTOA_2$
76	I/O	P91/$FTOA_3$	I/O	P91/$FTOA_3$	I/O	P91/$FTOA_3$	I/O	P91/$FTOA_3$	I/O	P91/$FTOA_3$
77	I/O	P92/TXD2/PW_1	I/O	P92/TXD2/PW_1	I/O	P92/TXD2/PW_1	I/O	P92/TXD2/PW_1	I/O	P92/TXD2/PW_1
78	I/O	P93/RXD2/PW_2	I/O	P93/RXD2/PW_2	I/O	P93/RXD2/PW_2	I/O	P93/RXD2/PW_2	I/O	P93/RXD2/PW_2
79	I/O	P94/SCK2/PW_3	I/O	P94/SCK2/PW_3	I/O	P94/SCK2/PW_3	I/O	P94/SCK2/PW_3	I/O	P94/SCK2/PW_3
80	I/O	P95/TXD1	I/O	P95/TXD1	I/O	P95/TXD1	I/O	P95/TXD1	I/O	P95/TXD1
81	I/O	P96/RXD1	I/O	P96/RXD1	I/O	P96/RXD1	I/O	P96/RXD1	I/O	P96/RXD1
82	I/O	P97/SCK1	I/O	P97/SCK1	I/O	P97/SCK1	I/O	P97/SCK1	I/O	P97/SCK1
83	—	GND	—	GND	—	GND	—	GND	—	GND
84	I	EXTAL	I	EXTAL	I	EXTAL	I	EXTAL	I	EXTAL

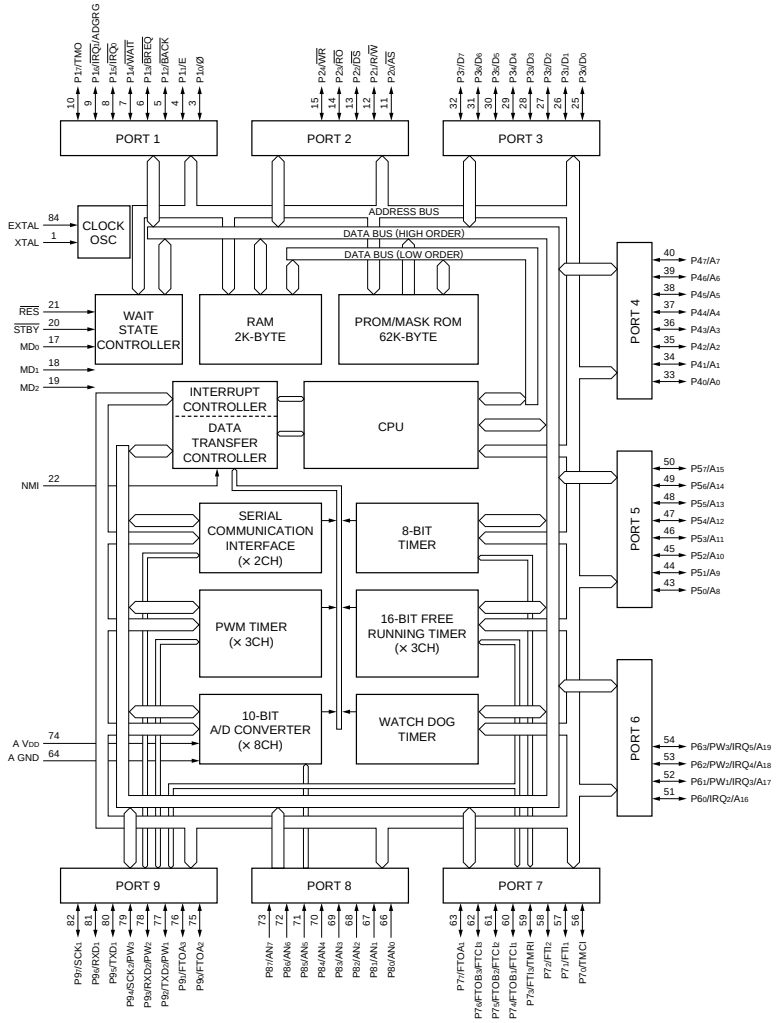

LC35256AM-10-TLM (SANYO)FLAT PACKAGE

C-MOS 256K (32,768WORD × 8)-BIT STATIC RAM

–TOP VIEW–

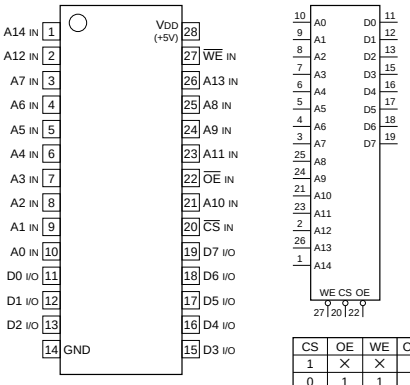

A0–A14 ; ADDRESS INPUTS
D0–D7 ; DATA INPUTS/OUTPUTS
CS ; CHIP SELECT INPUT
OE ; OUTPUT ENABLE INPUT
WE ; WRITE ENABLE INPUT

CS	OE	WE	OUTPUTS	FUNCTION
1	×	×	HI-Z	NO SELECTION
0	1	1	HI-Z	OUTPUT DISABLE
0	0	1	D OUT	READ
0	×	0	D IN	WRITE

0 ; LOW LEVEL
1 ; HIGH LEVEL
× ; DON'T CARE
HI-Z ; HIGH IMPEDANCE

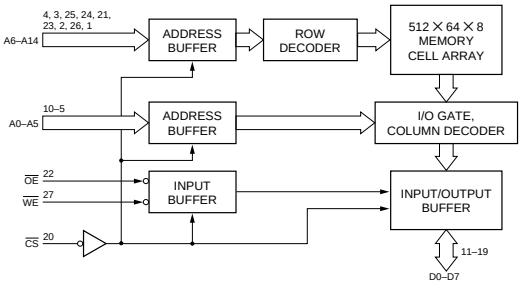

LM4041EIM3-1.2 (NS)

SHUNT VOLTAGE REFERENCE

– TOP VIEW –

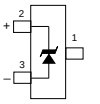

Reverse breakdown voltage = 1.225V

LT1252CS8 (LINEAR TECH)FLAT PACKAGE
LT1252CS8-E2

VIDEO AMPLIFIER

—TOP VIEW—

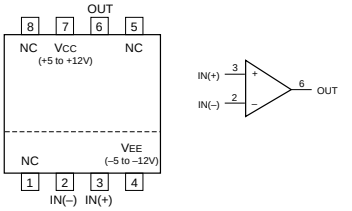

M27V201-200L6 (SGS)CHIP CARRIER

C-MOS 2M (256×8) -BIT UV ERASABLE PROM AND OTP ROM

— TOP VIEW —

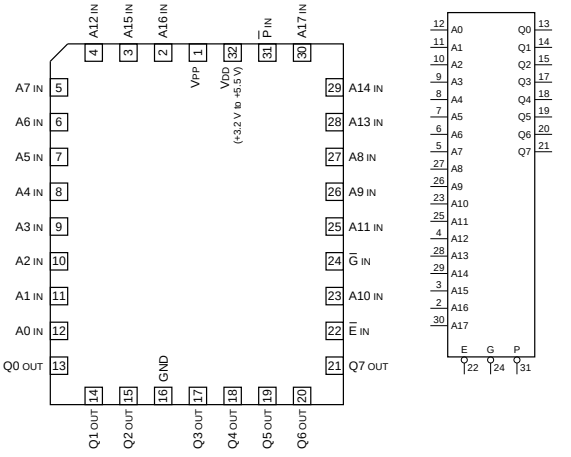

A0 - A17 ; ADDRESS INPUTS
Q0 - Q7 ; DATA OUTPUTS
$\overline{E}$; CHIP ENABLE INPUT
$\overline{G}$; OUTPUT ENABLE INPUT
$\overline{P}$; PROGRAM INPUT
VPP ; PROGRAM SUPPLY (12.75 V)

MODE	E	G	E	E	E	Q0 -Q7
READ	0	0	X	X	X	DATA OUT
OUTPUT DISABLE	0	1	X	X	X	HI-Z
PROGRAM	0	1	⊓	X	VPP	DATA IN
VERIFY	0	0	1	X	VPP	DATA OUT
PROGRAM INHIBIT	1	X	X	X	VPP	HI-Z
STANDBY	1	X	X	X	X	HI-Z
ELECTRONIC SIGNATURE	0	0	1	VID	VDD	CODES

0 ; INPUT LOW VOLTAGE
1 ; INPUT HIGH VOLTAGE
X ; DON'T CARE
VID ; 12 V ± 0.5 V
HI-Z ; HIGH IMPEDANCE

LM35DM (NSC)FLAT PACKAGE
LM35DMX

TEMPERATURE SENSOR

—TOP VIEW—

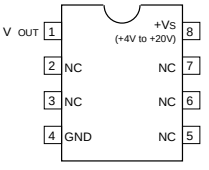

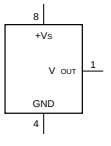

M5201FP (MITSUBISHI)FLAT PACKAGE
M5201FP-600D

DUAL OPERATIONAL AMPLIFIERS WITH SWITCHED OUTPUT
-TOP VIEW-

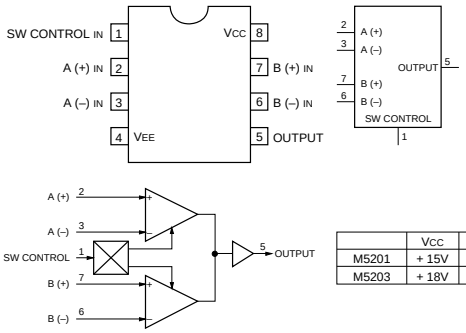

	VCC	VEE
M5201	+ 15V	– 15V
M5203	+ 18V	– 18V

M5222FP (MITSUBISHI)FLAT PACKAGE
M5222FP-E1

DUAL VOLTAGE CONTROL AMPLIFIER
-TOP VIEW-

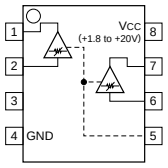

MAX202CSE (MAXIM)
MAX202CSE-TE2

RS-232 TRANSMITTER/RECEIVER
— TOP VIEW —

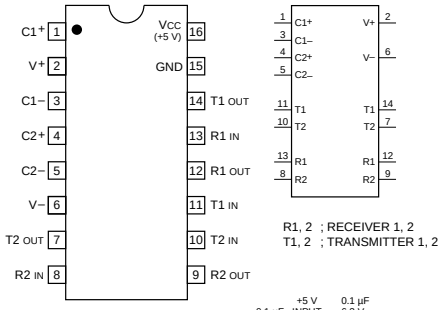

R1, 2 ; RECEIVER 1, 2
T1, 2 ; TRANSMITTER 1, 2

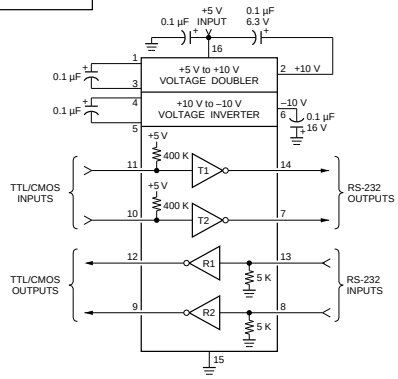

M62352GP (MITSUBISHI)FLAT PACKAGE
M62352GP-75ED

C-MOS 8-BITx12 CHANNEL D/A CONVERTER
(WITH BUFFER OPERATIONAL AMPLIFIER)
— TOP VIEW —

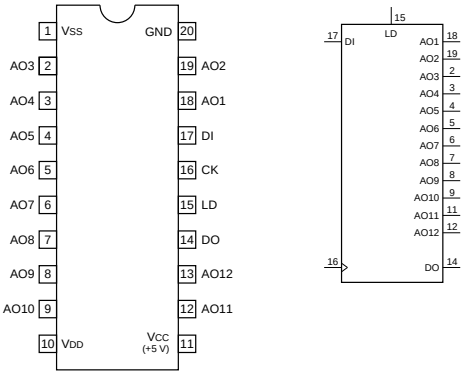

AO1-AO12 ; 8-BIT D/A OUTPUTS
CK ; CLOCK INPUT
DI ; SERIAL DATA INPUT
DO ; DATA OUTPUT

NOTE:
3.5 V < VDD < VCC
–3.5 V < VSS < VCC

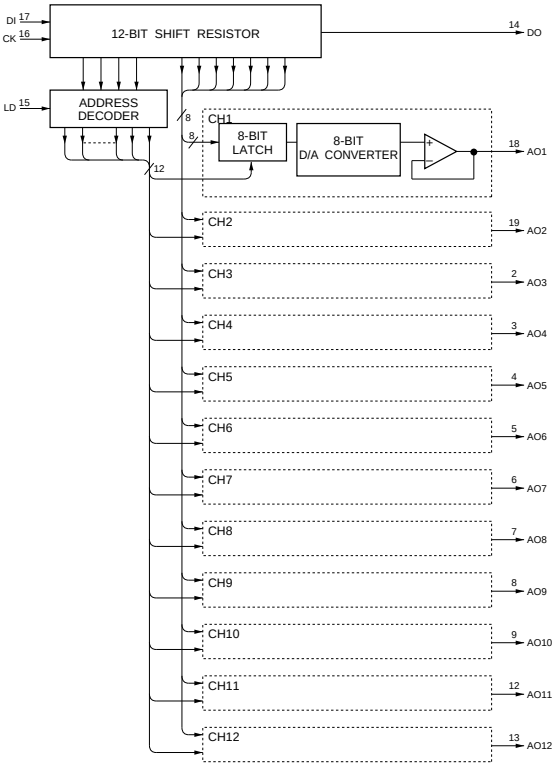

MAX703CSA-TE2 (MAXIM)FLAT PACKAGE

MICROPROCESSOR SUPERVISORY CIRCUIT
- TOP VIEW -

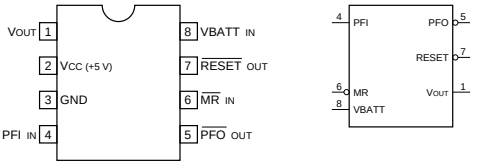

INPUT
MR ; MANUAL RESET
PFI ; POWER FAIL
VBATT ; BACKUP BATTERY

OUTPUT
PFO ; POWER FAIL
RESET ; RESET
VOUT ; POWER SUPPLY TO CMOS RAM

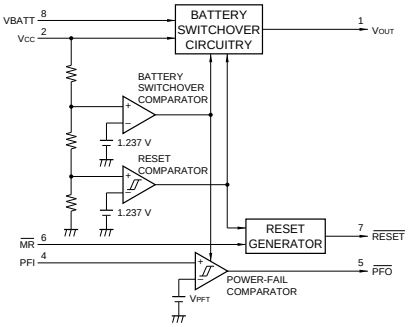

MB3761PF (FUJITSU)FLAT PACKAGE
MB3761PF-T2

VOLTAGE DETECTOR
-TOP VIEW-

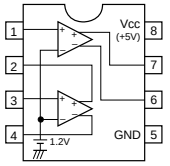

MC34151DR2 (MOTOROLA)FLAT PACKAGE

HIGH SPEED MOS FET DRIVER
-TOP VIEW-

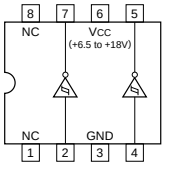

MB3793-42PNF (FUJITSU)FLAT PACKAGE
MB3793-42PNF-ER

BIPOLA SOURCE VOLTAGE SUPERVISOR
-TOP VIEW-

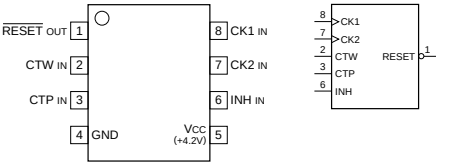

INPUT
CK1 ; CLOCK 1
CK2 ; CLOCK 2
CTP ; POWER ON RESET HOLD TIME PRESET
CTW ; WATCHDOG TIMER SUPERVISION TIME PRESET
INH ; INHIBIT

OUTPUT
RESET ; RESET

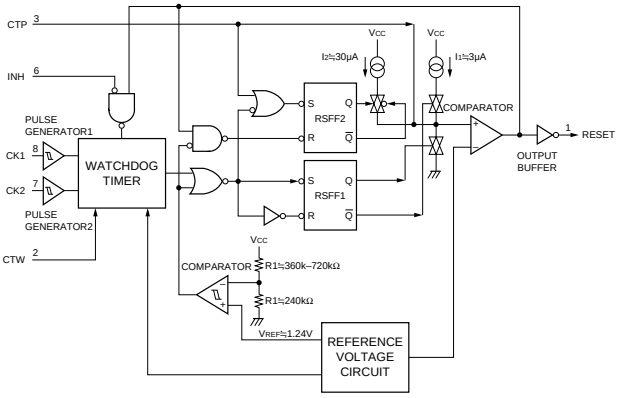

MP7523JS (MICRO POWER SYSTEMS)FLAT PACKAGE
MP7523JS-T2

C-MOS 8-BIT D/A CONVERTER
-TOP VIEW-

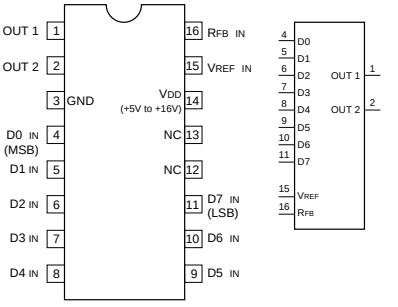

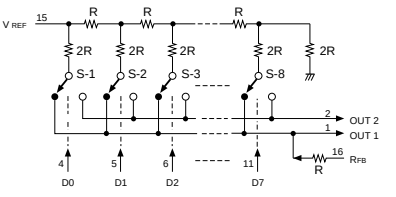

MP7523 : R=10k
XRD7523 : R=20k

http://getMANUAL.com

MB88351PFV (FUJITSU)FLAT PACKAGE
MB88351PFV-ER

C-MOS 12-BIT D / A CONVERTER WITH OPERATIONAL AMPLIFIER
-TOP VIEW-

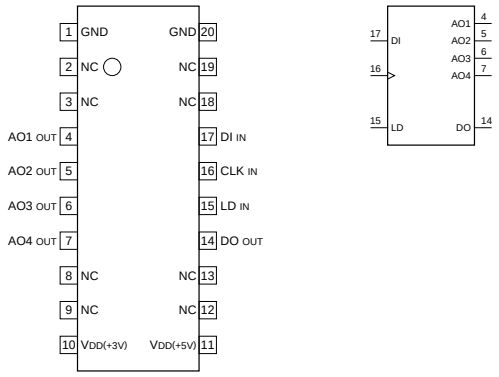

INPUT
CLK ; CHIFT CLOCK
DI ; SERIAL DATA
LD ; DECODER AND D/A REGISTER TO LOAD

OUTPUT
AO1 - AO4 ; ANALOG DATA
DO ; MBS BIT DATA IN 15-BIT SHIFT REGISTER

D12	D13	D14	ADDRESS SELECT
0	0	0	DON'T CARE
0	0	1	AO1 SELECT
0	1	0	AO2 SELECT
0	1	1	AO3 SELECT
1	0	0	AO4 SELECT
1	0	1	DON'T CARE
1	1	0	DON'T CARE
1	1	1	DON'T CARE

0 ; LOW LEVEL
1 ; HIGH LEVEL

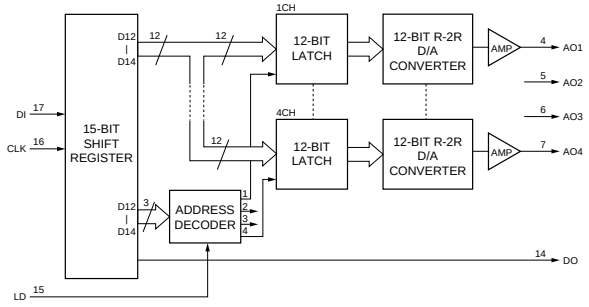

MC34182M (MOTOROLA)FLAT PACKAGE
MC34182MEL
NJM082BM(TE2)
NJM082M (JRC)FLAT PACKAGE
NJM2041M-D (JRC)FLAT PACKAGE
NJM2041M-D(TE2)
NJM4565M-A (JRC)FLAT PACKAGE
NJM4565M-A(TE2)
NJM5532M (JRC)FLAT PACKAGE
NJM5532M(TE2)
TL062CPW (TI)FLAT PACKAGE
TL062CPW-E05
TL082CPW-E05 (TI)FLAT PACKAGE

DUAL OPERATIONAL AMPLIFIERS
(DUAL-SUPPLY TYPE)
–TOP VIEW–

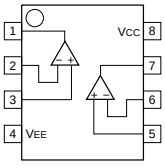

TYPE	VCC	VEE
062/072/082/4556A/ M5218/BA15218/ 33178/34182 TYPES	+2 to +16V	–2 to –16V
4580 TYPE	+2 to +18V	–2 to –18V
5532 TYPE	+3 to +20V	–3 to –20V
CXA1297 TYPE	+5 to +12V	–5 to –12V
M5219/M5220 TYPES	+5 to +22.5V	–5 to –22.5V
NJM2100 TYPE	+1 to +3.5V	–1 to –3.5V
OP-297 TYPE	+2 to +20V	–2 to –20V
OTHERS	+5 to +16V	–5 to –16V

NJM2901V(TE2) (JRC)FLAT PACKAGE

SINGLE SUPPLY COMPARATOR
–TOP VIEW–

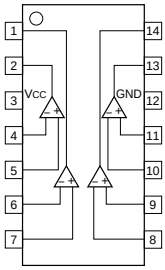

NJM2903M (JRC)FLAT PACKAGE
NJM2903M-TE2
NJM2903V(TE2) (FSC)

DUAL VOLTAGE COMPARATORS
—TOP VIEW—

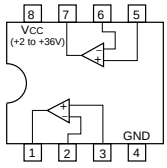

NJM3403AM (JRC)FLAT PACKAGE
NJM3403AM(TE2)

QUAD OPERATIONAL AMPLIFIER
–TOP VIEW–

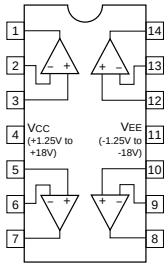

MSM6524GS-VKR2 (OKI)FLAT PACKAGE

C-MOS 12 CHANNELS 8-BITS D-A CONVERTER WITH 96-BIT EEPROM
-TOP VIEW-

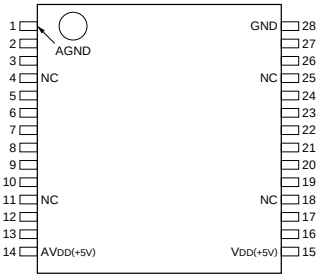

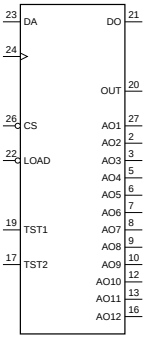

PIN NO.	I/O	SIGNAL	PIN NO.	I/O	SIGNAL
1	—	A GND	15	—	VDD(+5V)
2	O	AO2	16	O	AO12
3	O	AO3	17	I	TST2
4	—	NC	18	—	NC
5	O	AO4	19	I	TST1
6	O	AO5	20	O	OUT
7	O	AO6	21	O	DO
8	O	AO7	22	I	$\overline{LOAD}$
9	O	AO8	23	I	DA
10	O	AO9	24	I	CLK
11	—	NC	25	—	NC
12	O	AO10	26	I	$\overline{CS}$
13	O	AO11	27	O	AO1
14	—	AVDD(+5V)	28	—	GND

INPUT
CLK ; SHIFT CLOCK
CS ; WRITE MODE PROTECT
DA ; SERIAL DATA
LOAD ; LOAD INPUT OF 8-BIT SHIFT REGISTER
TST1, TST2 ; TEST PINS

OUTPUT
AO0-AO12 ; 8-BIT D/A OUTPUTS
DO ; LSB BIT DATA OF 8-BIT SHIFT REGISTER
OUT ; MONITOR PIN

MODE (1) WRITE

1st BYTE								2nd BYTE							
D0	D1	D2	D3	D4	D5	D6	D7	D0	D1	D2	D3	D4	D5	D6	D7
1	0	0	1	A0	A1	A2	A3	10	11	12	13	14	15	16	17
MODE SELECT				ADDRESS SELECT				DA DATA SET							

MODE (2) LOAD

1st BYTE								2nd BYTE							
D0	D1	D2	D3	D4	D5	D6	D7	D0	D1	D2	D3	D4	D5	D6	D7
1	1	1	1	A0	A1	A2	A3	10	11	12	13	14	15	16	17
MODE SELECT				ADDRESS SELECT				DA DATA SET							

MODE (3) MEMORY TEST

1st BYTE								2nd BYTE							
D0	D1	D2	D3	D4	D5	D6	D7	D0	D1	D2	D3	D4	D5	D6	D7
0	0	1	1	A0	A1	A2	A3	O0	O1	O2	O3	O4	O5	O6	O7
MODE SELECT				ADDRESS SELECT				MEMORY DATA OUTPUT							

0 ; LOW LEVEL
1 ; HIGH LEVEL

MODE SELECT

D0	D1	D2	D3	MODE SELECT
1	0	0	1	MODE1
1	1	1	1	MODE2
0	0	1	1	MODE3
OTHERS				DON'T CARE

ADDRESS SELECT

D4	D5	D6	D7	ADDRESS SELECT
A0	A1	A2	A3	
0	0	0	0	DON'T CARE
1	0	0	0	AO1
0	1	0	0	AO2
1	1	0	0	AO3
0	0	1	0	AO4
1	0	1	0	AO5
0	1	1	0	AO6
1	1	1	0	AO7
0	0	0	1	AO8
1	0	0	1	AO9
0	1	0	1	AO10
1	1	0	1	AO11
0	0	1	1	AO12
1	0	1	1	DON'T CARE
0	1	1	1	DON'T CARE
1	1	1	1	DON'T CARE

D/A OUTPUT

D0	D1	D2	D3	D4	D5	D6	D7	D/A OUTPUT
10	11	12	13	14	15	16	17	
0	0	0	0	0	0	0	0	≒ VOLA + (VOHA–VOLA)/256 × 1
1	0	0	0	0	0	0	0	≒ VOLA + (VOHA–VOLA)/256 × 2
0	1	0	0	0	0	0	0	≒ VOLA + (VOHA–VOLA)/256 × 3
1	1	0	0	0	0	0	0	≒ VOLA + (VOHA–VOLA)/256 × 4
0	0	1	0	0	0	0	0	≒ VOLA + (VOHA–VOLA)/256 × 5
⋮	⋮	⋮	⋮	⋮	⋮	⋮	⋮	⋮ ⋮ ⋮
0	0	1	1	1	1	1	1	≒ VOLA + (VOHA–VOLA)/256 × 256
1	0	1	1	1	1	1	1	≒ VOLA + (VOHA–VOLA)/256 × 254
0	1	1	1	1	1	1	1	≒ VOLA + (VOHA–VOLA)/256 × 255
1	1	1	1	1	1	1	1	≒ VOLH

0 ; LOW LEVEL
1 ; HIGH LEVEL

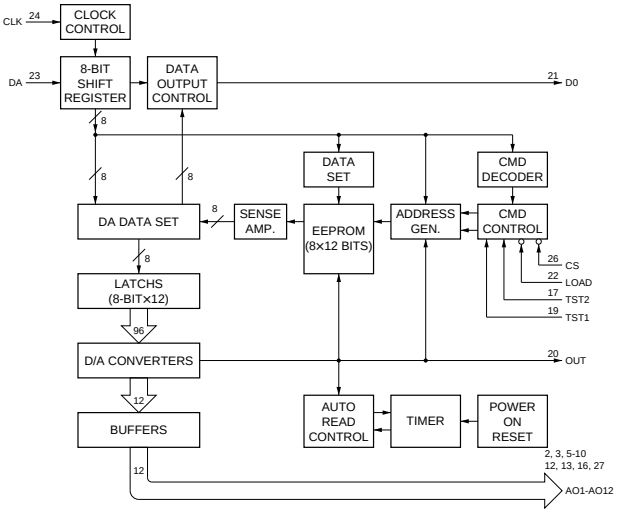

NJM360M (JRC)FLAT PACKAGE
NJM360M-TE2

HIGH SPEED VOLTAGE COMPARATOR
—TOP VIEW—

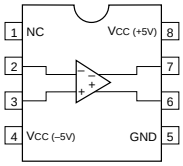

NJM386M (JRC)FLAT PACKAGE
NJM386M-T2

AUDIO POWER AMPLIFIER
–TOP VIEW–

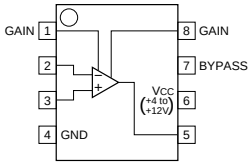

NJM431U (JRC)
NJM431U-TE1

ADJUSTABLE PRECISION SHUNT REGULATOR
-FRONT VIEW-

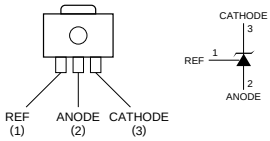

NJU7021V-TE2 (JRC)FLAT PACKAGE

C-MOS OPERATION AMPLIFIER
–TOP VIEW–

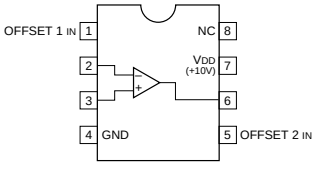

NJU7024M (JRC)FLAT PACKAGE
NJU7024V-TE2
NJU7034V-TE2 (JRC)FLAT PACKAGE

C-MOS 4-CIRCUIT OPERATION AMPLIFIER
–TOP VIEW–

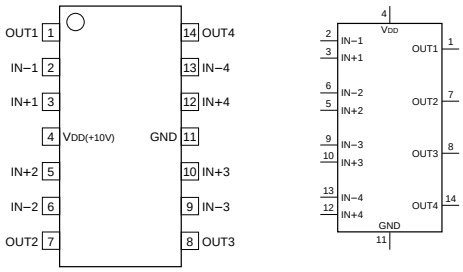

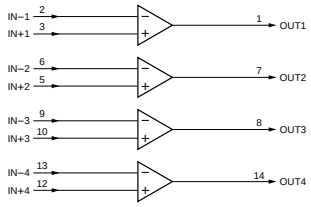

PCF8574T-T (PHILIPS)

C-MOS REMOTE 8-BIT I/O EXPANDER
— TOP VIEW —

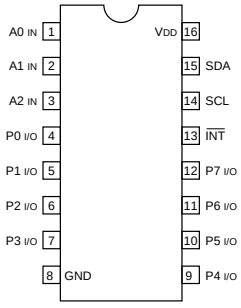

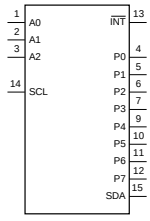

INPUT
A0 - A2 ; ADDRESS INPUTS
SCL ; SYSTEM CLOCK LINE

OUTPUT
$\overline{INT}$; INTERRUPT OUTPUT
SDA ; SERIAL DATA LINE

INPUT/OUTPUT
P0 - P7 ; 8-BITS QUASI-BIDIRECTIONAL I/O PORT

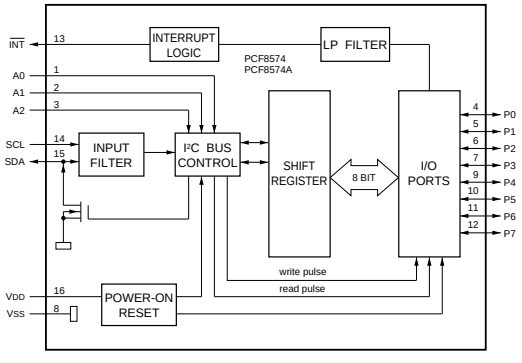

REF-03GSR (PMI)FLAT PACKAGE

REFERENCE/TEMPERATURE TRANSDUCER
— TOP VIEW —

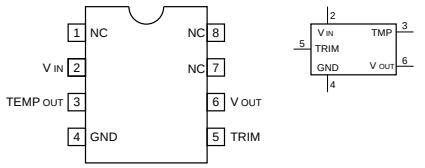

V IN ; INPUT VOLTAGE (+4.5 V to +33 V)
TEMP OUT ; TEMPERATURE TRANSDUCER VOLTAGE OUTPUT
TRIM IN ; OUTPUT SIGNAL TRIMMING
V OUT ; OUTPUT VOLTAGE (+2.5 V)

S-8054HN-CB-S (SEIKO I AND E)
S-8054HN-CB-T1

C-MOS VOLTAGE DETECTOR WITH N-CHANNEL OPEN DRAIN OUTPUT
-TOP VIEW-

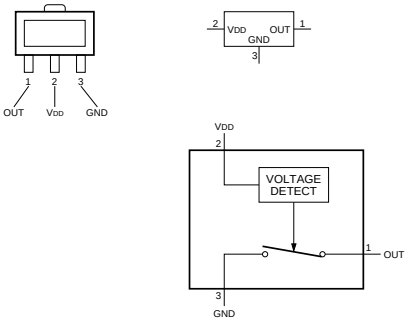

S-80740AN-D4-S (SEIKO I&E)
S-80740AN-D4-T1

C-MOS VOLTAGE DETECTOR
-TOP VIEW-

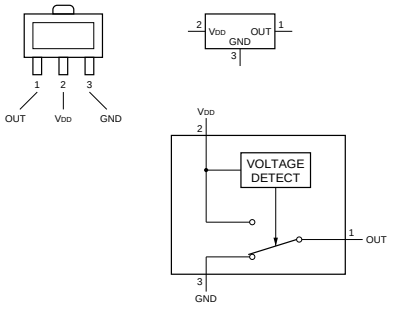

S-81230AG-RB-S (SEIKO I AND E)+3.0V FLAT PACKAGE
S-81230AG-RB-T1

THREE TERMINAL POSITIVE VOLTAGE REGULATOR
—TOP VIEW—

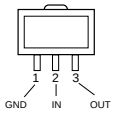

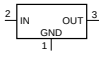

SC7S04F (MOTOROLA)CHIP PACKAGE
TC4S69F (TOSHIBA)CHIP PACKAGE
TC4S69F(TE85R)
TC7S04F(TE85R)
TC7S04FU(TE85R) (TOSHIBA)FLAT PACKAGE
TC7SH04FU (TOSHIBA)CHIP PACKAGE
TC7SH04FU-TE85R

C-MOS INVERTER

-TOP VIEW-

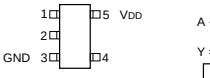

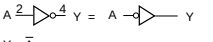

$Y = \overline{A}$

A	Y
0	1
1	0

0 ; LOW LEVEL
1 ; HIGH LEVEL

TYPE	VDD
7S04F 7SU04F 7SU04FU	+2 to +6V
4S69F 4SU69F	+3 to +18V
7SH04FU 7SHU04FU	+2 to +5.5V

SC7S32F (MOTOROLA)CHIP PACKAGE
TC7S32F(TE85R)
TC7S32FU(TE85R) (TOSHIBA)FLAT PACKAGE
TC7SH32FU-TE85R (TOSHIBA)FLAT PACKAGE

C-MOS 2-INPUT OR GATE

-TOP VIEW-

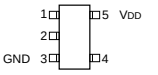

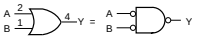

$Y = A + B = \overline{\overline{A} \cdot \overline{B}}$

A	B	Y
0	0	0
0	1	1
1	0	1
1	1	1

0 ; LOW LEVEL
1 ; HIGH LEVEL

TYPE	VDD
7S32F 7S32FU	+2 to +6V
4S71F	+3 to +18V
7SH32FU	+2 to +5.5V

SN74HC00APW-E05
SN74HC00APW-E20 (TI)FLAT PACKAGE
TC74VHC00FS(EL) (TOSHIBA)FLAT PACKAGE(SMALL)

C-MOS QUAD 2-INPUT NAND GATES
-TOP VIEW-

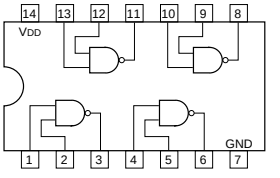

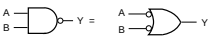

$Y = \overline{A \cdot B} = \overline{A} + \overline{B}$

A	B	Y
0	0	1
0	1	1
1	0	1
1	1	0

0 ; LOW LEVEL
1 ; HIGH LEVEL

NOTE:

TYPE	VDD
74AC/74VHC	+2 to +5.5V
74ACT/74HCT	+4.5 to +5.5V
74LCX	+2 to +3.6V
OTHER TYPES	+2 to +6V

SN74HC04APW-E05
SN74HC04APW-E20 (TI)FLAT PACKAGE
SN74HCT04APW-E05 (TI)FLAT PACKAGE
TC74VHC04FS(EL) (TOSHIBA)FLAT PACKAGE(SMALL)
TC74VHCU04FS(EL) (TOSHIBA)FLAT PACKAGE

C-MOS HEX INVERTERS
-TOP VIEW-

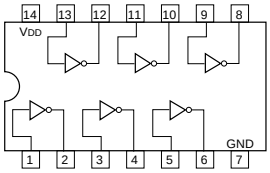

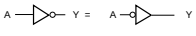

$Y = \overline{A}$

A	Y
0	1
1	0

0 ; LOW LEVEL
1 ; HIGH LEVEL

NOTE:

TYPE	VDD
74AC/74VHC/74VHCT	+2 to +5.5V
74ACT/74HCT	+4.5 to +5.5V
74LCX	+2 to +3.6V
OTHER TYPE	+2 to +6V

SN74HC08APW-E05 (TI)FLAT PACKAGE
SN74HCT08APW-E05
SN74HCT08APW-E20 (TI)FLAT PACKAGE
TC74VHC08FS(EL) (TOSHIBA)FLAT PACKAGE(SMALL)

C-MOS QUAD 2-INPUT AND GATE
- TOP VIEW -

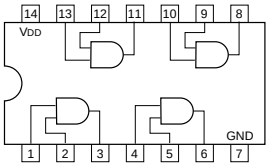

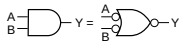

$Y = A \bullet B = \overline{\overline{A} + \overline{B}}$

A	B	Y
0	0	0
0	1	0
1	0	0
1	1	1

0 ; LOW LEVEL
1 ; HIGH LEVEL

NOTE :

TYPE	VDD
AC	+2 to +5.5V
TC40H	+2 to +8V
ACT/HCT	+5V
OTHER TYPES	+2 to +6V

SN74HC10APW-E05 (TI)FLAT PACKAGE
TC74VHC10FS(EL) (TOSHIBA)FLAT PACKAGE

C-MOS 3-INPUT NAND GATE
-TOP VIEW-

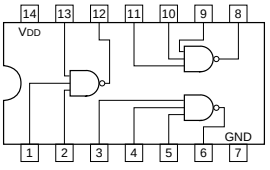

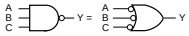

$Y = \overline{ABC} = \overline{A} + \overline{B} + \overline{C}$

A	B	C	Y
0	0	0	1
0	0	1	1
0	1	0	1
0	1	1	1
1	0	0	1
1	0	1	1
1	1	0	1
1	1	1	0

0 ; LOW LEVEL
1 ; HIGH LEVEL

NOTE :

TYPE	VDD
40H	+2 to +8V
74VHC	+2 to +5.5V
OTHERS	+2 to +6V

SN74HC163APW-E05 (TI)FLAT PACKAGE
TC74VHC163F (TOSHIBA)FLAT PACKAGE
TC74VHC163FS(EL)

C-MOS PRESETTABLE SYNCHRONOUS 4-BIT BINARY COUNTER
—TOP VIEW—

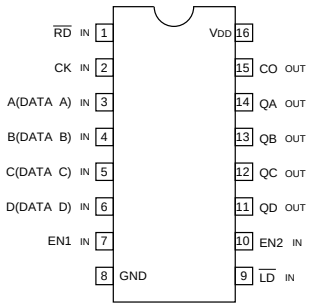

MODE SELECTION

CONTROL INPUTS				MODE
RD	LD	EN1	EN2	
0	X	X	X	RESET (SYNCHRONOUS)
1	0	X	X	PRESET (SYNCHRONOUS)
1	1	0	X	NO COUNT
1	1	X	0	NO COUNT
1	1	1	1	COUNT

CARRY OUTPUT "CO"

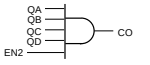

CO IS HIGH WHEN EN2 INPUT IS HIGH AND COUNT IS "15".

NOTE:

TYPE	VDD
HC	+2 to +6V
AC/VHC	+2 to +5.5V
HCT/ACT/FCT	+5V

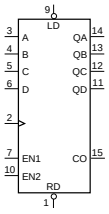

COUNT SEQUENCE

COUNT	OUTPUTS			
	QD	QC	QB	QA
0	0	0	0	0
1	0	0	0	1
2	0	0	1	0
3	0	0	1	1
4	0	1	0	0
5	0	1	0	1
6	0	1	1	0
7	0	1	1	1
8	1	0	0	0
9	1	0	0	1
10	1	0	1	0
11	1	0	1	1
12	1	1	0	0
13	1	1	0	1
14	1	1	1	0
15	1	1	1	1

SN74HC32APW-E05 (TI)FLAT PACKAGE
SN74HCT32APW-E05
SN74HCT32APW-E20 (TI)FLAT PACKAGE
TC74VHC32FS(EL) (TOSHIBA)FLAT PACKAGE(SMALL)

C-MOS QUAD 2-INPUT OR GATES
-TOP VIEW-

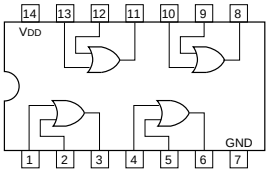

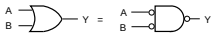

$Y = A + B = \overline{\overline{A} \bullet \overline{B}}$

A	B	Y
0	0	0
0	1	1
1	0	1
1	1	1

0 ; LOW LEVEL
1 ; HIGH LEVEL

NOTE:

TYPE	VDD
74AC/74VHC	+2 to +5.5V
74HC	+2 to +6V
74HCT	+4.5 to +5.5V

SN74HC574APW-E05
SN74HC574APW-E20 (TI)
SN74LVC574APW-E05 (TI)FLAT PACKAGE
TC74VHC574FS(EL) (TOSHIBA)FLAT PACKAGE(SMALL)

C-MOS 3-STATE D-TYPE EDGE-TRIGGERED FLIP-FLOP
-TOP VIEW-

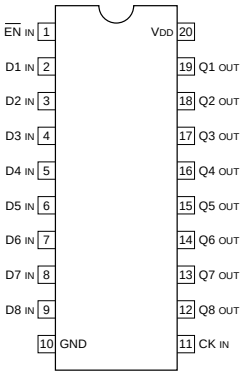

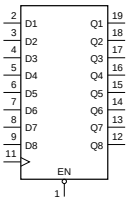

EACH FLIP-FLOP

INPUTS			OUT
EN	CK	D	Q
0	↑	1	1
0	↑	0	0
0	↓	×	Q_0
1	×	×	HI-Z

0 ; LOW LEVEL
1 ; HIGH LEVEL
× ; DON'T CARE
HI-Z ; HIGH IMPEDANCE
Q_0 ; NO CHANGE

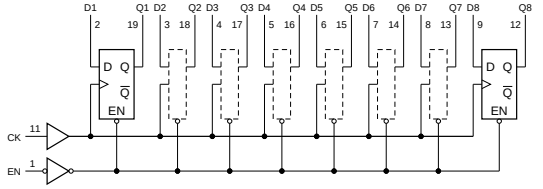

NOTE;

TYPE	VDD
74HC	+2 to +6V
74AC/74VHC	+2 to +5.5V
74ACT/74FCT/74HCT	+4.5 to +5.5V
74LCX	+2 to 3.6V
74LVC	+2.7 to 3.6V

SN74HCT541APW-E05 (TI)FLAT PACKAGE
TC74VHC541FS(EL) (TOSHIBA)FLAT PACKAGE(SMALL)
TC74VHCT541FS(EL) (TOSHIBA)FLAT PACKAGE

C-MOS BUFFERS AND LINE DRIVERS WITH 3-STATE OUTPUTS
- TOP VIEW -

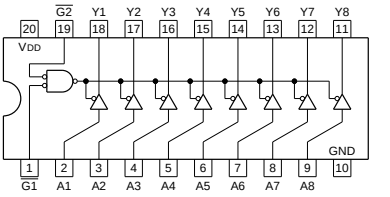

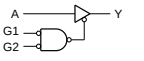

G1	G2	A	Y
0	0	0	1
0	0	1	0
1	X	X	HI-Z
X	1	X	HI-Z

0 ; LOW LEVEL
1 ; HIGH LEVEL
X ; DON'T CARE
HI-Z ; HIGH IMPEDANCE

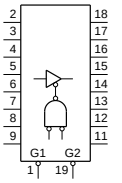

NOTE :

TYPE	VDD
TC74AC/TC74VHC	+2 to +5.5V
ABT/ACT/BCT/HCT/VHCT	+5V
OTHER TYPES	+2 to +6V

STK12C68-S45 (SIMTEK)FLAT PACKAGE

C-MOS 8K × 8-BIT NONVOLATILE STATIC RAM
– TOP VIEW–

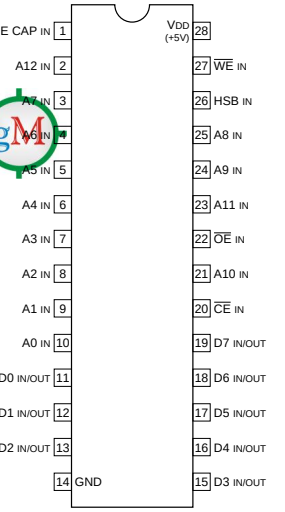

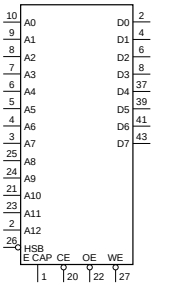

A0 - A12 ; ADDRESS INPUTS
$\overline{CE}$; CHIP ENABLE INPUT
D0 - D7 ; DATA INPUTS/OUTPUTS
E CAP ; EXTERNAL CAPACITOR
$\overline{HSB}$; HARDWARE STORE/BUSY
$\overline{OE}$; OUTPUT ENABLE INPUT
$\overline{WE}$; WRITE ENABLE INPUT

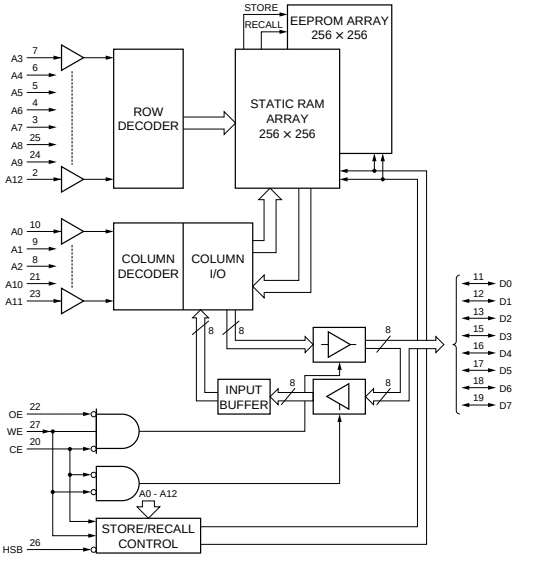

SN74LS123NS (TI)FLAT PACKAGE
SN74LS123NS-E05

TTL RETRIGGERABLE MONOSTABLE MULTIVIBRATORS WITH DIRECT RESET
—TOP VIEW—

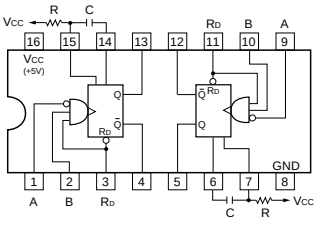

INPUTS			OUTPUTS	
R_D	A	B	Q	$\overline{Q}$
0	X	X	0	1
X	1	X	0	1
X	X	0	0	1
1	0	↑	⊓	⊔
1	↓	1	⊓	⊔
↑	0	1	⊓	⊔

0 ; LOW LEVEL
1 ; HIGH LEVEL
X ; DON'T CARE

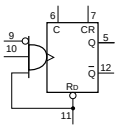

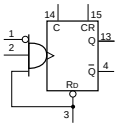

OUTPUT PULSE WIDTH

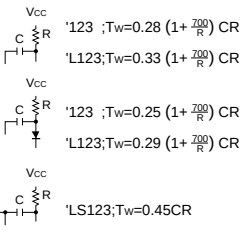

TC4052BFS(ELQ) (TOSHIBA)FLAT PACKAGE

C-MOS DUAL 4-CHANNEL ANALOG MULTIPLEXERS / DEMULTIPLEXERS
-TOP VIEW-

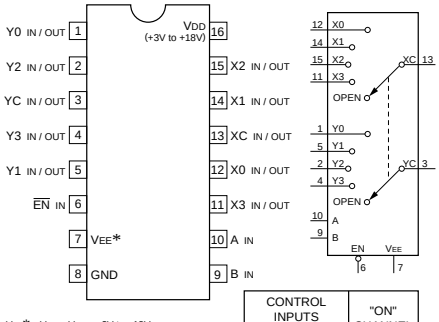

VEE*; VDD – VEE = +3V to +18V

CONTROL INPUTS			"ON" CHANNEL
EN	B	A	
0	0	0	0
0	0	1	1
0	1	0	2
0	1	1	3
1	X	X	OPEN

0 ; LOW LEVEL
1 ; HIGH LEVEL
X ; DON'T CARE

TC4053BFS (TOSHIBA)FLAT PACKAGE
TC4053BFS-EL

C-MOS TRIPLE 2-CHANNEL ANALOG MULTIPLEXERS/DEMULTIPLEXERS
— TOP VIEW —

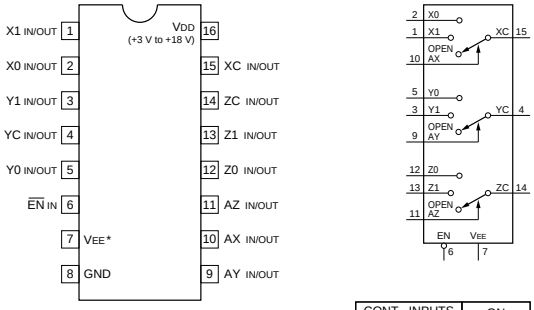

VEE*; VDD – VEE + 3 V + 18 V

CONT. INPUTS		ON CHANNEL
EN	A (X, Y, Z)	
0	0	0
0	1	1
1	X	OPEN

0 ; LOW LEVEL
1 ; HIGH LEVEL
X ; DON'T CARE

TC4066BFS-EL (TOSHIBA)

C-MOS QUAD BILATERAL ANALOG SWITCH
-TOP VIEW-

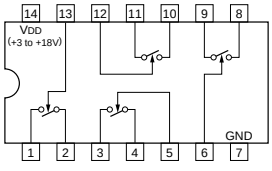

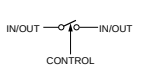

CONTROL	SWITCH
0	OFF
1	ON

0 ; LOW LEVEL
1 ; HIGH LEVEL

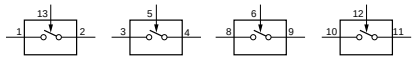

TC4094BF (TOSHIBA)FLAT PACKAGE
TC4094BF-TP2

C-MOS 8-STAGE SHIFT-AND-STORE BUS REGISTER
–TOP VIEW–

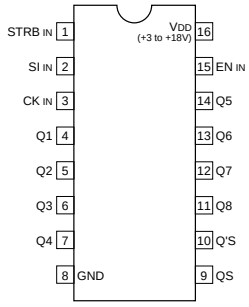

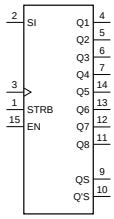

SI ; SERIAL DATA INPUT
CK ; CLOCK INPUT
STRB ; STROBE INPUT
EN ; OUTPUT ENABLE INPUT
Q1 - Q8 ; PARALLEL DATA OUTPUTS
QS, Q'S ; SERIAL DATA OUTPUTS

INPUTS				PARALLEL OUT		SERIAL OUT	
CK	EN	STRB	SI	Q1	Qn	QS	Q's
↑	0	X	X	HI-Z	HI-Z	Q7	NC
↓	0	X	X	HI-Z	HI-Z	NC	Q7
↑	1	0	X	NC	NC	Q7	NC
↑	1	1	0	0	Qn-1	Q7	NC
↑	1	1	1	1	Qn-1	Q7	NC
↓	1	1	1	NC	NC	NC	Q7

1 ; HIGH
0 ; LOW
X ; DON'T CARE
HI-Z ; HIGH IMPEDANCE
NC ; NO CHANGE

TC4S01F (TOSHIBA)CHIP PACKAGE
TC4S01F(TE85R)
TC7S02FU (TOSHIBA)CHIP PACKAGE
TC7S02FU-TE85L
TC7SH02FU (TOSHIBA)CHIP PACKAGE
TC7SH02FU-TE85R

C-MOS 2-INPUT NOR GATE

(SCALE 6/1)
—TOP VIEW—

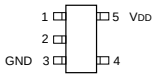

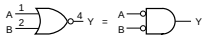

$Y = \overline{A + B} = \overline{A} \cdot \overline{B}$

A	B	Y
0	0	1
0	1	0
1	0	0
1	1	0

0 ; LOW LEVEL
1 ; HIGH LEVEL

TYPE	VDD
4S01F	+3 to +18V
7S02F	+2 to +6V
7S02FU	
7SH02FU	

TC4S66F (TOSHIBA)CHIP PACKAGE
TC4S66F(TE85R)

C-MOS BILATERAL ANALOG SWITCH
—TOP VIEW—

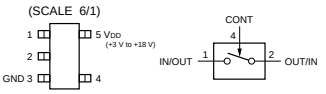

CONT	SWITCH
0	OFF
1	ON

0 ; LOW LEVEL
1 ; HIGH LEVEL

TC4S81F(TE85R) (TOSHIBA)CHIP PACKAGE
TC7S08F(TOSHIBA)CHIP PACKAGE
TC7S08F(TE85R)
TC7S08FU(TE85R) (TOSHIBA)FLAT PACKAGE
TC7SH08FU-TE85R (TOSHIBA)CHIP PACKAGE

C-MOS 2-INPUT AND GATE

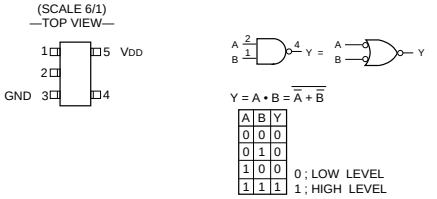

A	B	Y
0	0	0
0	1	0
1	0	0
1	1	1

0 ; LOW LEVEL
1 ; HIGH LEVEL

TYPE	VDD
7S08F 7S08FU	+2 to +6V
4S81F 14S81F	+3 to +18V
7SH08FU	–2 to +5.5V

TC4W53F (TOSHIBA)CHIP PACKAGE(5.0 X 3.1)
TC4W53FU (TOSHIBA)CHIP PACKAGE
TC4W53FU (TE12R)

C-MOS 2-CHANNEL MULTIPLEXER / DEMULTIPLEXER

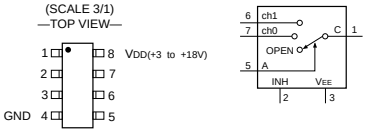

CONT.INPUT		ON CHANNEL
INH	A	
0	0	ch0
0	1	ch1
1	X	OPEN

0 ; LOW LEVEL
1 ; HIGH LEVEL
X ; DON'T CARE

TC4W66FU(TE12R) (TOSHIBA)FLAT PACKAGE

C-MOS DUAL BILATERAL SWITCH

-TOP VIEW-

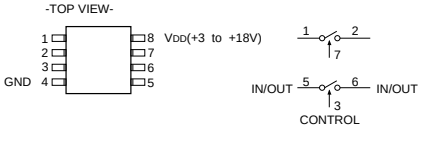

CONTROL	SWITCH
0	OFF
1	ON

0 : LOW LEVEL
1 : HIGH LEVEL

TC74AC86F (TOSHIBA)FLAT PACKAGE
TC74VHC86FS(EL) (TOSHIBA)FLAT PACKAGE

C-MOS QUAD EXCLUSIVE OR GATES
-TOP VIEW-

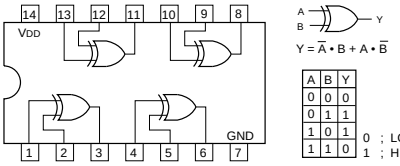

A	B	Y
0	0	0
0	1	1
1	0	1
1	1	0

0 ; LOW LEVEL
1 ; HIGH LEVEL

NOTE :

TYPE	VDD
74AC/74VHC	+2V to +5.5V
74ACT/74HCT	+4.5 to +5.5V
OTHER TYPES	+2V to +6V

TC74HC4052AFS(EL) (TOSHIBA)FLAT PACKAGE

C-MOS DUAL 4-CHANNEL ANALOG MULTIPLEXER/DEMULTIPLEXER
-TOP VIEW-

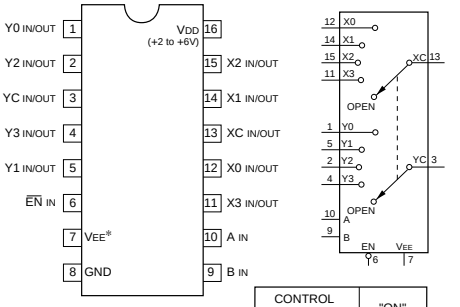

VEE*; VDD–VEE=+3 to +12V

CONTROL INPUTS			"ON" CHANNEL
EN	B	A	
0	0	0	0
0	0	1	1
0	1	0	2
0	1	1	3
1	X	X	OPEN

0 ; LOW LEVEL
1 ; HIGH LEVEL
X ; DON'T CARE

TC74HC4053AFS (TOSHIBA)FLAT PACKAGE
TC74HC4053AFS-EL

C-MOS TRIPLE 2-CHANNEL ANALOG MULTIPLEXER/DEMULTIPLEXER
-TOP VIEW-

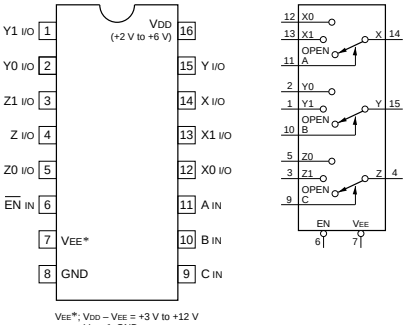

VEE*; VDD – VEE = +3 V to +12 V
VEE ≦ GND

CONTROL INPUTS				ON CHANNEL		
EN	SELECT					
	C	B	A			
0	0	0	0	Z0	Y0	X0
0	0	0	1	Z0	Y0	X1
0	0	1	0	Z0	Y1	X0
0	0	1	1	Z0	Y1	X1
0	1	0	0	Z1	Y0	X0
0	1	0	1	Z1	Y0	X1
0	1	1	0	Z1	Y1	X0
0	1	1	1	Z1	Y1	X1
1	X	X	X	OPEN		

0 ; LOW LEVEL
1 ; HIGH LEVEL
X ; DON'T CARE

TC74HC4538AFS-EL (TOSHIBA)FLAT PACKAGE

C-MOS DUAL RETRIGGERABLE / NON-RETRIGGERABLE MONOSTABLE MULTIVIBRATOR

-TOP VIEW -

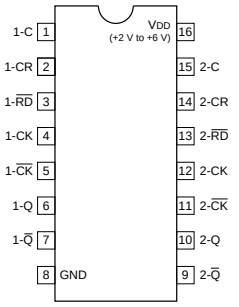

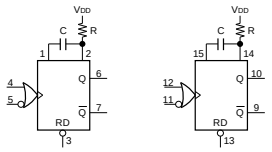

OUTPUT PULSE WIDTH = k · C · R

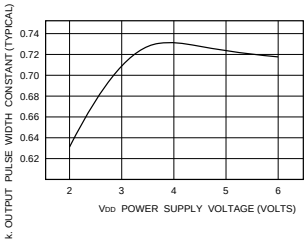

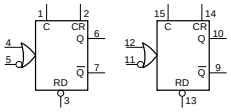

RETRIGGERABLE M. M. V

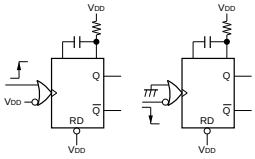

NON-RETRIGGERABLE M. M. V

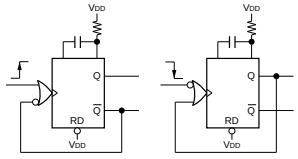

TC74VHC02F (TOSHIBA)FLAT PACKAGE
TC74VHC02FS(EL)

C-MOS QUAD 2-INPUT NOR GATES

-TOP VIEW-

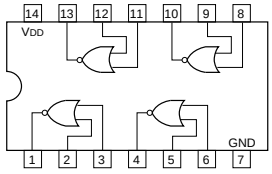

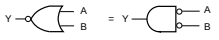

$Y = \overline{A + B} = \overline{A} \cdot \overline{B}$

A	B	Y
0	0	1
0	1	0
1	0	0
1	1	0

0 ; LOW LEVEL
1 ; HIGH LEVEL

NOTE:

TYPE	VDD
74HC	+2 to +6V
74AC/74VHC	+2 to +5.5V
74HCT/74ACT	+4.5 to +5.5V
74LCX	+2 to +3.6V

TC74VHC125FS(EL) (TOSHIBA)

C-MOS BUS BUFFER GATES WITH 3-STATE OUTPUT

-TOP VIEW-

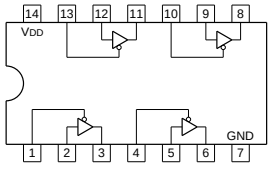

G	A	Y
0	0	0
0	1	1
1	X	HI-Z

0 ; LOW LEVEL
1 ; HIGH LEVEL
X ; DON'T CARE
HI-Z ; HIGH IMPEDANCE

NOTE :

TYPE	VDD
74AC/ 74VHC	+2 to +5.5V
74ACT/74HCT	+4.5 to +5.5V
74LCX	+2 to +3.6V
74LVT/74LVC	+2.7 to +3.6V
OTHER TYPES	+2 to +6V

TC74VHC138FS(EL) (TOSHIBA)FLAT PACKAGE(SMALL)

C-MOS 3-TO-8 LINE DECODER / DEMULTIPLEXER

—TOP VIEW—

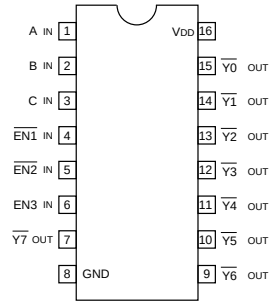

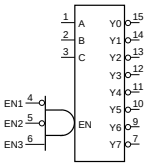

INPUTS				OUTPUTS						
EN	C	B	A	Y7	Y6	Y5	Y4	Y3	Y2	Y1	Y0
0	X	X	X	1	1	1	1	1	1	1	1
1	0	0	0	1	1	1	1	1	1	1	0
1	0	0	1	1	1	1	1	1	1	0	1
1	0	1	0	1	1	1	1	1	0	1	1
1	0	1	1	1	1	1	1	0	1	1	1
1	1	0	0	1	1	1	1	0	1	1	1
1	1	0	1	1	1	1	0	1	1	1	1
1	1	1	0	1	1	0	1	1	1	1	1
1	1	1	1	0	1	1	1	1	1	1	1

EN = $\overline{EN1} \cdot \overline{EN2} \cdot EN3$

0 ; LOW LEVEL
1 ; HIGH LEVEL
X ; DON'T CARE

NOTE:

TYPE	VDD
74HCT138 TYPE	+5V
74ACT138 TYPE	+4.5 to +5.5V
TC74AC138 TYPE TC74VHC138	+2 to +5.5V
OTHER TYPES	+2 to +6V

TC74VHC139FS(EL) (TOSHIBA)FLAT PACKAGE(SMALL)

C-MOS DUAL 2-TO-4 DECODER/DEMULTIPLEXER

- TOP VIEW -

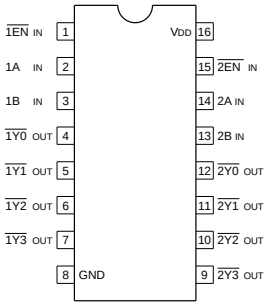

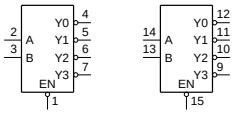

INPUTS			OUTPUTS			
EN	B	A	Y3	Y2	Y1	Y0
0	0	0	1	1	1	0
0	0	1	1	1	0	1
0	1	0	1	0	1	1
0	1	1	0	1	1	1
1	X	X	1	1	1	1

0 ; LOW LEVEL
1 ; HIGH LEVEL
X ; DON'T CARE

NOTE :

TYPE	VDD
TC74AC/TC74VHC	+2 to +5.5V
HCT/ACT	+5V
OTHER TYPES	+2 to +6V

TC74VHC153FS(EL) (TOSHIBA)FLAT PACKAGE

C-MOS DUAL 4-LINE-TO-1-LINE DATA SELECTOR/MULTIPLEXER

-TOP VIEW-

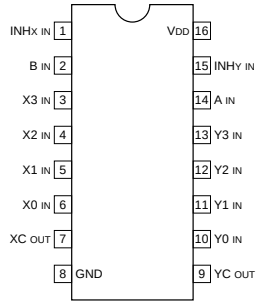

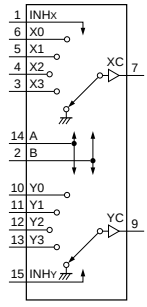

NOTE:

TYPE	VDD
ACT/HCT/FCT	+5V
40H	+2 to +8V
TC74AC/TC74VHC	+2 to +5.5V
OTHER TYPES	+2 to +6V

CONTROL IN			ON
INH	B	A	CHANNEL
0	0	0	0
0	0	1	1
0	1	0	2
0	1	1	3
1	X	X	GND

0 : LOW LEVEL
1 : HIGH LEVEL
X : DON'T CARE

TC74VHC157FS(EL) (TOSHIBA)

C-MOS QUAD 2-LINE-TO-1-LINE DATA SELECTOR/ DEMULTIPLEXER
—TOP VIEW—

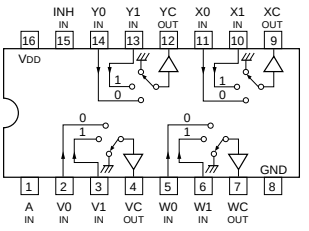

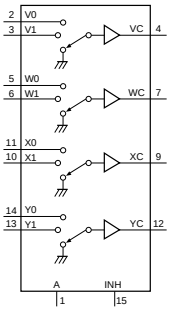

NOTE:

TYPE	VDD
74ACT/74FCT	+5V
TC74AC157P TC74AC157	+2 to +5.5V
TC40H	+2 to +8V
OTHER TYPES	+2 to +6V

CONT.IN		ON
INH	A	CHANNEL
0	0	0
0	1	1
1	X	GND

0 ; LOW LEVEL
1 ; HIGH LEVEL
X ; DON'T CARE

TC74VHC174FS(EL) (TOSHIBA)FLAT PACKAGE(SMALL)

C-MOS D-TYPE FLIP-FLOP WITH RESET
- TOP VIEW -

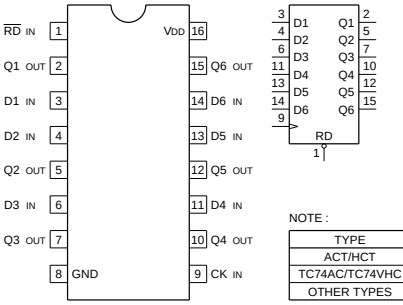

EACH FLIP-FLOP

INPUTS			OUT
RD	CK	D	Q
0	X	X	0
1	↑	0	0
1	↑	1	1
1	0	X	Q0

0 ; LOW LEVEL
1 ; HIGH LEVEL
X ; DON'T CARE

NOTE :

TYPE	VDD
ACT/HCT	+5V
TC74AC/TC74VHC	+2 to +5.5V
OTHER TYPES	+2 to +6V

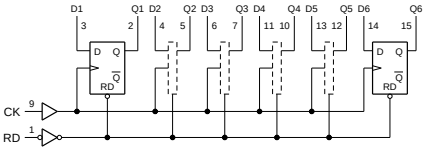

TC74VHC164F (TOSHIBA)FLAT PACKAGE
TC74VHC164FS(EL)

C-MOS 8-BIT SERIAL-IN/PARALLEL-OUT SHIFT REGISTER
—TOP VIEW—

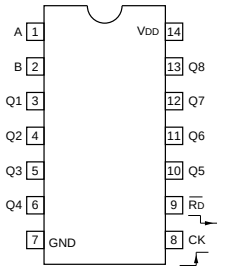

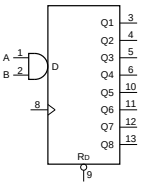

INPUTS				OUTPUTS			
RD	CK	A	B	Q1	Q2	···	Q8
0	X	X	X	0	0	0	0
1	0	X	X	Q1o	Q2o	···	Q8o
1	↑	1	1	1	Q1n	···	Q7n
1	↑	0	X	0	Q1n	···	Q7n
1	↑	X	0	0	Q1n	···	Q7n

0 ; LOW LEVEL
1 ; HIGH LEVEL
X ; DON'T CARE

NOTE:

TYPE	VDD
AC/VHC	+2 to +5.5 V
HC	+2 to +6 V
HCT	+5 V

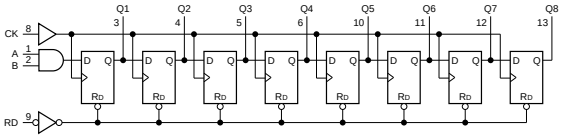

TC74VHC21F (TOSHIBA)FLAT PACKAGE
TC74VHC21FS(EL)

C-MOS DUAL 4-INPUT POSITIVE AND GATE
—TOP VIEW—

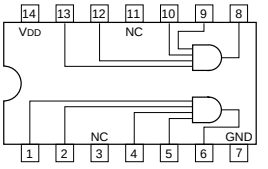

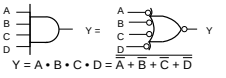

A	B	C	D	Y
0	0	0	0	0
0	0	0	1	0
0	0	1	0	0
0	0	1	1	0
0	1	0	0	0
⋮	⋮	⋮	⋮	⋮
1	1	0	1	0
1	1	1	0	0
1	1	1	1	1

0 ; LOW LEVEL
1 ; HIGH LEVEL

NOTE:

TYPE	VDD
HC	+2V to + 6V
VHC	+2V to + 5.5V

TC74VHC221AFS(EL) (TOSHIBA)FLAT PACKAGE

C-MOS MONOSTABLE MULTIVIBRATOR WITH SCHMITT TRIGGER INPUT
-TOP VIEW-

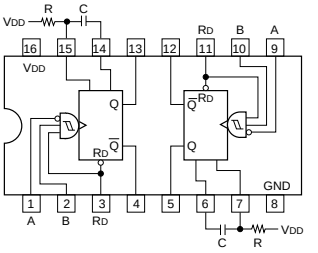

INPUTS			OUTPUTS	
RD	A	B	Q	Q̄
0	X	X	0	1
X	1	X	0	1
X	X	0	0	1
1	0	↑	⊓	⊔
1	↓	1	⊔	⊓
↑	0	1	⊔	⊓

0 ; LOW LEVEL
1 ; HIGH LEVEL
X ; DON'T CARE

OUTPUT PULSE WIDTH = 0.7CR

NOTE:

TYPE	VDD
74AC/74VHC	+2 to +5.5V
74HCT	+4.5 to +5.5V
74HC	+2 to +6V

TC74VHC245FS(EL) (TOSHIBA)FLAT PACKAGE(SMALL)

C-MOS BILATERAL BUS TRANSCEIVERS WITH 3-STATE OUTPUTS
-TOP VIEW-

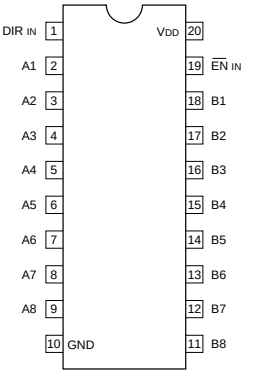

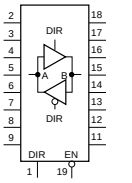

EN	DIR	OPERATION
0	0	B to A
0	1	A to B
1	X	HI-Z

0 ; LOW LEVEL
1 ; HIGH LEVEL
X ; DON'T CARE
HI-Z ; HIGH IMPEDANCE

NOTE:

TYPE	VDD
74HC	+2 to +6V
74ABT 74ACT 74BCT 74HCT	+4.5 to +5.5V
74AC 74VHC	+2 to +5.5V
74LCX	+2 to +3.6V
74LVT	+2.7 to +3.6V

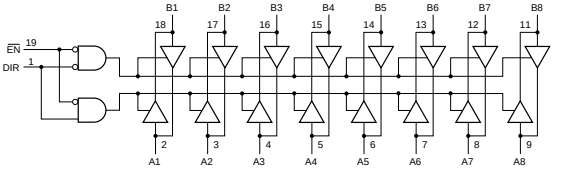

http://getMANUAL.com

TC74VHC540FS(EL) (TOSHIBA)FLAT PACKAGE(SMALL)

C-MOS 3-STATE OCTAL INVERTING BUFFERS/DRIVERS

- TOP VIEW -

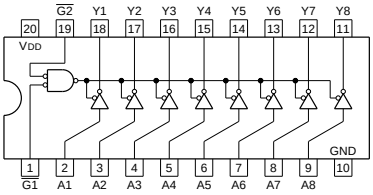

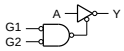

G1	G2	A	Y
0	0	0	1
0	0	1	0
1	X	X	HI-Z
X	1	X	HI-Z

0 ; LOW LEVEL
1 ; HIGH LEVEL
X ; DON'T CARE
HI-Z ; HIGH IMPEDANCE

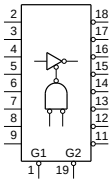

NOTE :

TYPE	VDD
TC74AC/TC74VHC	+2 to +5.5V
HCT/ACT	+5V
OTHER TYPES	+2 to +6V

TC74VHC573FS(EL) (TOSHIBA)FLAT PACKAGE

C-MOS 3-STATE OUTPUTS OCTAL LATCH

- TOP VIEW -

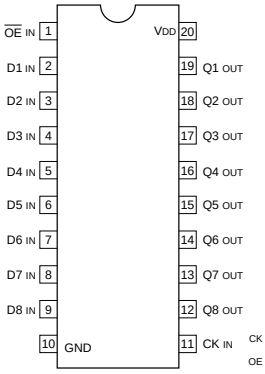

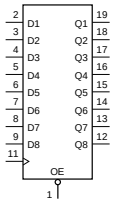

INPUT			OUT
OE	CK	D	Q
0	1	1	1
0	1	0	0
0	0	X	Qo
1	X	X	HI-Z

0 ; LOW LEVEL
1 ; HIGH LEVEL
X ; DON'T CARE
HI-Z ; HIGH IMPEDANCE
Qo ; NO CHANGE

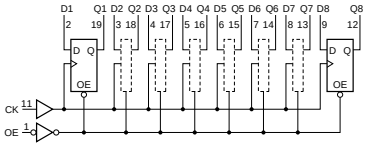

NOTE :

TYPE	VDD
74HC	+2 to +6V
74ABT 74ACT 74HCT/74VHCT	+5V
74AC/74VHC	+2 to +5.5V

TC74VHC74FS(EL) (TOSHIBA)FLAT PACKAGE(SMALL)

C-MOS DUAL D-TYPE FLIP-FLOPS WITH DIRECT SET/RESET

-TOP VIEW-

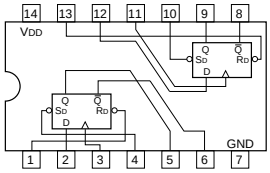

INPUTS				OUTPUTS	
$\overline{S_D}$	$\overline{R_D}$	CK	D	Qn+1	$\overline{Qn+1}$
0	1	X	X	1	0
1	0	X	X	0	1
0	0	X	X	1	1
1	1	↓	1	1	0
1	1	↓	0	0	1
1	1	0	X	Qn	$\overline{Qn}$

0 ; LOW LEVEL
1 ; HIGH LEVEL
X ; DON'T CARE

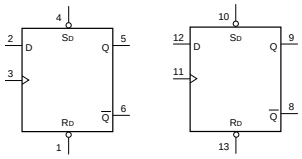

NOTE:

TYPE	VDD
74HCT/74ACT	+4.5 to +5.5V
74LVC	+2.7 to +3.6V
74AC/74VHC	+2 to +5.5V
OTHERS	+2 to +6V

TC7S00FU(TE85R) (TOSHIBA)CHIP PACKAGE
TC7SH00FU-TE85R (TOSHIBA)FLAT PACKAGE

C-MOS 2-INPUT NAND GATE

— TOP VIEW —

(SCALE 6/1)

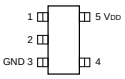

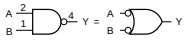

A	B	Y
0	0	1
0	1	1
1	0	1
1	1	0

0 ; LOW LEVEL
1 ; HIGH LEVEL

TYPE	VDD
7S00F 7S00FU	+2 to +6 V
4S11F 4SU11F	+3 to +18 V
7SH00FU	+2 to +5.5 V

TC7S14F(TE85R)
TC7S14F-TE85L (TOSHIBA)CHIP PACKAGE
TC7S14FU (TOSHIBA)CHIP PACKAGE

C-MOS SCHMITT INVERTER

-TOP VIEW-

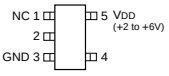

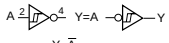

A	Y
0	1
1	0

0 ; LOW LEVEL
1 ; HIGH LEVEL

TC7S66F (TOSHIBA)
TC7S66F(TE85R)

C-MOS ANALOG SWITCH

—TOP VIEW—

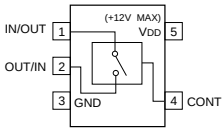

TC7W00FU (TOSHIBA)CHIP PACKAGE
TC7W00FU(TE12R)

C-MOS DUAL 2-INPUT NAND GATE

-TOP VIEW-

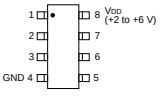

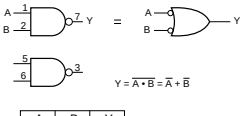

A	B	Y
0	0	1
0	1	1
1	0	1
1	1	0

0; LOW LEVEL
1; HIGH LEVEL

TC7W02F (TOSHIBA)FLAT PACKAGE
TC7W02FU(TE12R)

C-MOS DUAL 2-INPUT NOR GATE
—TOP VIEW—

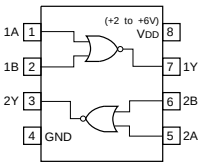

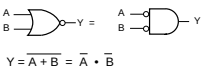

$Y = \overline{A + B} = \overline{A} \cdot \overline{B}$

A	B	Y
0	0	1
0	1	0
1	0	0
1	1	0

0 ; LOW LEVEL
1 ; HIGH LEVEL

TC7W04FU(TE12R) (TOSHIBA)FLAT PACKAGE

C-MOS HEX INVERTERS

(SCALE 3/1)
—TOP VIEW—

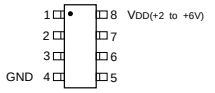

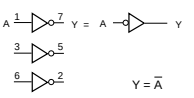

$Y = \overline{A}$

A	Y
0	1
1	0

0 ; LOW LEVEL
1 ; HIGH LEVEL

TC7W08FU (TOSHIBA)CHIP PACKAGE
TC7W08FU(TE12R)

C-MOS 2-INPUT AND GATE

(SCALE 3/1)
—TOP VIEW—

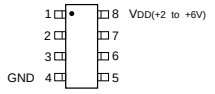

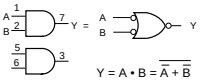

$Y = A \cdot B = \overline{\overline{A} + \overline{B}}$

A	B	Y
0	0	0
0	1	0
1	0	0
1	1	1

0 ; LOW LEVEL
1 ; HIGH LEVEL

TC7W14FU(TE12R) (TOSHIBA)CHIP PACKAGE

C-MOS HEX INVERTERS
-TOP VIEW-

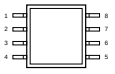

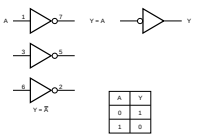

A	Y
0	1
1	0

0 ; LOW LEVEL
1 ; HIGH LEVEL

TC7W32FU (TOSHIBA)CHIP PACKAGE
TC7W32FU(TE12R)

C-MOS DUAL 2-INPUT OR GATE
—TOP VIEW—

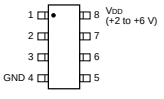

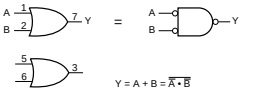

$Y = A + B = \overline{\overline{A} \cdot \overline{B}}$

A	B	Y	
0	0	0	
0	1	1	
1	0	1	0; LOW LEVEL
1	1	1	1; HIGH LEVEL

TC7W74FU (TOSHIBA)CHIP PACKAGE
TC7W74FU(TE12R)

C-MOS D-TYPE FLIP-FLOPS WITH DIRECT SET / RESET
—TOP VIEW—

(SCALE 3/1)
—TOP VIEW—

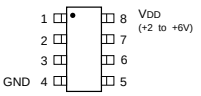

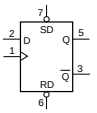

INPUTS				OUTPUTS	
$\overline{Sd}$	$\overline{Rd}$	CK	D	Qn+1	$\overline{Qn+1}$
0	1	X	X	1	0
1	0	X	X	0	1
0	0	X	X	1	1
1	1	↑	1	1	0
1	1	↑	0	0	1
1	1	↓	X	Qn	$\overline{Qn}$

0 ; LOW LEVEL
1 ; HIGH LEVEL
X ; DON'T CARE

TL064CPW (TI)FLAT PACKAGE
TL064CPW-E05

OPERATIONAL AMPLIFIER
(J FET INPUT)
—TOP VIEW—

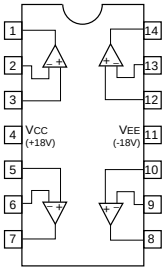

TL074CPW (TI)FLAT PACKAGE
TL074CPW-E05

OPERATIONAL AMPLIFIER
(LOW-NOISE, JFET-INPUT)
—TOP VIEW—

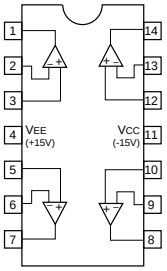

TE7751 (TKE)

C-MOS SUPER I/O EXPANDER (8 bit x 9 ch)

- TOP VIEW -

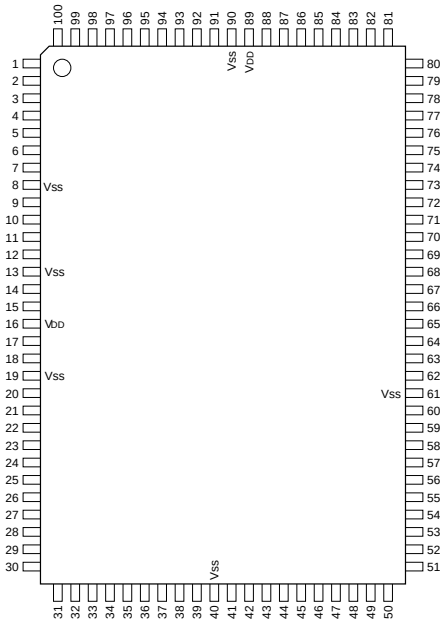

PIN No.	I/O	SIGNAL	PIN No.	I/O	SIGNAL	PIN No.	I/O	SIGNAL	PIN No.	I/O	SIGNAL
1	I/O	P81	26	I/O	P16	51	I/O	P46	76	I/O	P52
2	I/O	P82	27	I/O	P17	52	I/O	P47	77	I/O	P53
3	I/O	P83	28	I/O	P20	53	I/O	D0	78	I/O	P54
4	I/O	P84	29	I/O	P21	54	I/O	D1	79	I/O	P55
5	I/O	P85	30	I/O	P22	55	I/O	D2	80	I/O	P56
6	I/O	P86	31	I/O	P23	56	I/O	D3	81	I/O	P57
7	I/O	P87	32	I/O	P24	57	I/O	D4	82	I/O	P60
8	–	Vss	33	I/O	P25	58	I/O	D5	83	I/O	P61
9	I/O	P90	34	I/O	P26	59	I/O	D6	84	I/O	P62
10	I/O	P91	35	I/O	P27	60	I/O	D7	85	I/O	P63
11	I/O	P92	36	I/O	P30	61	–	Vss	86	I/O	P64
12	I/O	P93	37	I/O	P31	62	I	$\overline{\text{RESET}}$	87	I/O	P65
13	–	Vss	38	I/O	P32	63	I	$\overline{\text{CS}}$	88	I/O	P66
14	I/O	P94	39	I/O	P33	64	I	$\overline{\text{RD}}$/$\overline{\text{RW}}$	89	–	V_{DD}
15	I/O	P95	40	–	Vss	65	I	$\overline{\text{WR}}$/$\overline{\text{MEN}}$	90	–	Vss
16	–	V_{DD}	41	I/O	P34	66	I	A0	91	I/O	P67
17	I/O	P96	42	I/O	P35	67	I	A1	92	I/O	P70
18	I/O	P97	43	I/O	P36	68	I	A2	93	I/O	P71
19	–	Vss	44	I/O	P37	69	I	A3	94	I/O	P72
20	I/O	P10	45	I/O	P40	70	I	IOS0	95	I/O	P73
21	I/O	P11	46	I/O	P41	71	I	IOS1	96	I/O	P74
22	I/O	P12	47	I/O	P42	72	I	IOS2	97	I/O	P75
23	I/O	P13	48	I/O	P43	73	I	MS	98	I/O	P76
24	I/O	P14	49	I/O	P44	74	I/O	P50	99	I/O	P77
25	I/O	P15	50	I/O	P45	75	I/O	P51	100	I/O	P80

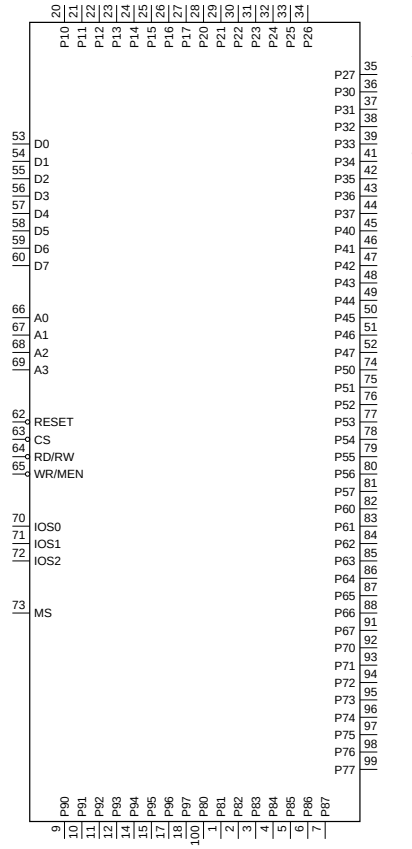

INPUT

A0-A3	; ADDRESS INPUT
CS	; CHIP SELECT
IOS0-2	; I/O SELECT
MS	; MODE SELECT
$\overline{\text{RD}}$/$\overline{\text{RW}}$	; READ/WRITE
RESET	; RESET
$\overline{\text{WR}}$/$\overline{\text{MEN}}$	; WRITE/MOTOROLA ENABLE

INPUT/OUTPUT

D0-7	; DATA BUS
P10-17	; I/O PORT 1
P20-27	; I/O PORT 2
P30-37	; I/O PORT 3
P40-47	; I/O PORT 4
P50-57	; I/O PORT 5
P60-67	; I/O PORT 6
P70-77	; I/O PORT 7
P80-87	; I/O PORT 8
P90-97	; I/O PORT 9

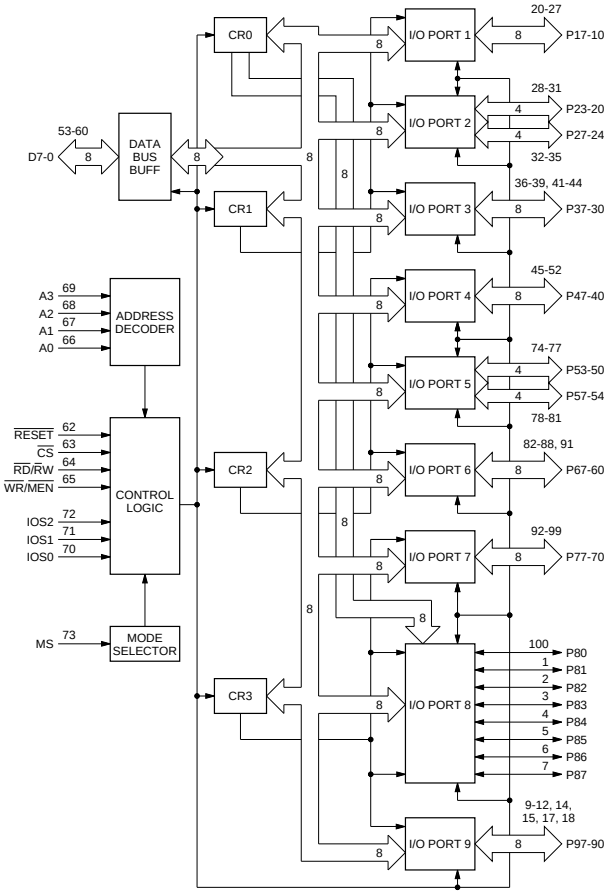

TL1451ACPW-E05 (TI)

DUAL PWM POWER CONTROLLER
-TOP VIEW-

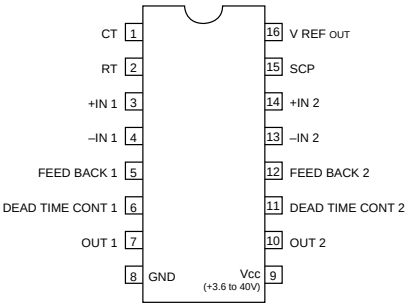

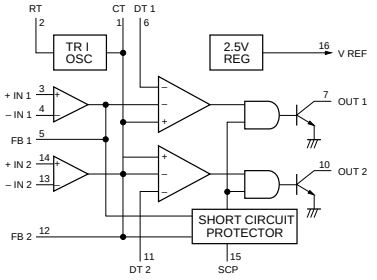

TLC272CPS (TI)FLAT PACKAGE
TLC272CPS-E05
TLC272CPW-E05 (TI)FLAT PACKAGE

C-MOS DUAL OPERATIONAL AMPLIFIERS
(SINGLE-SUPPLY TYPE)
–TOP VIEW–

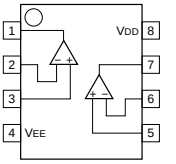

TYPE	VDD - VEE
LMC662 TYPE	+5 to +15V
OTHERS	+3 to +16V

TLC274CPW (TI)FLAT PACKAGE
TLC274CPW-E05

C-MOS OPERATIONAL AMPLIFIER
—TOP VIEW—

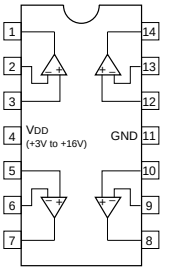

TL5001CD-E1 (TI)
TL5001CD-E2

SWITCHING REGULATOR CONTROLLER
- TOP VIEW -

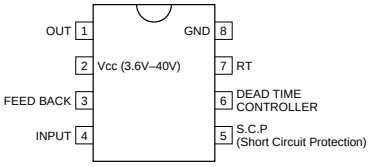

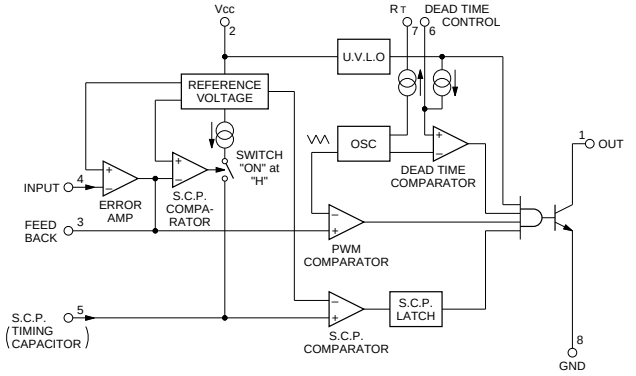

TSC426C0A (TELEDYNE)FLAT PACKAGE
TSC426C0A-T2

C-MOS HIGH SPEED DUAL DRIVER
—TOP VIEW—

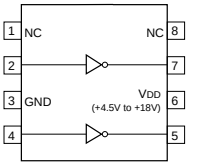

UPC319G2 (NEC)FLAT PACKAGE

DUAL VOLTAGE COMPARATOR
-TOP VIEW-

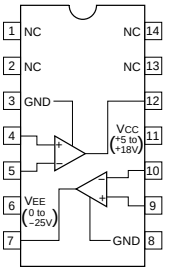

TLC2932IPW (TI)
TLC2932IPW-E05
TLC2932IPW-E20 (TI)

C-MOS VCO AND PHASE FREQUENCY DETECTOR
- TOP VIEW -

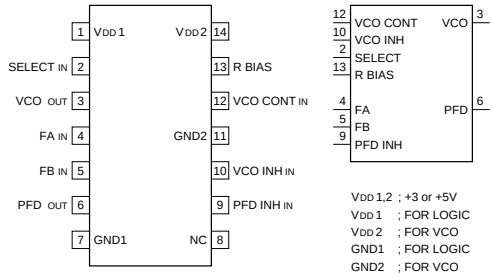

VDD 1,2 ; +3 or +5
VDD 1 ; FOR LOGIC
VDD 2 ; FOR VCO
GND1 ; FOR LOGIC
GND2 ; FOR VCO

INPUT
FA ; REFERENCE FREQUENCY
FB ; INPUT FREQUENCY FROM OUTSIDE COUNTER
PFD INH ; PFD INHIBIT
SELECT ; VCO OUTPUT FREQUENCY SELECT
VCO CONT ; VCO CONTROL VOLTAGE
VCO INH ; VCO INHIBIT

OUTPUT
PFD ; PHASE FREQUENCY DETECTOR
VCO ; VOLTAGE CONTROLLED OSCILLATOR

OTHER
R BIAS ; BIAS RESISTOR FOR VCO OSCILLATION FREQUENCY SETTING

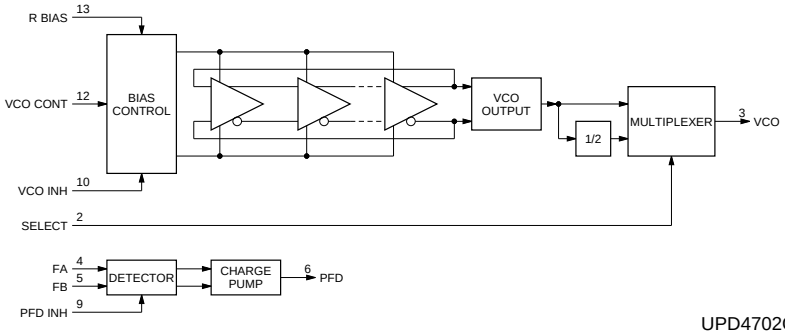

UPD16502GS(1) (NEC)FLAT PACKAGE
UPD16502GS(1)-E2

C-MOS CCD DRIVER
—TOP VIEW—

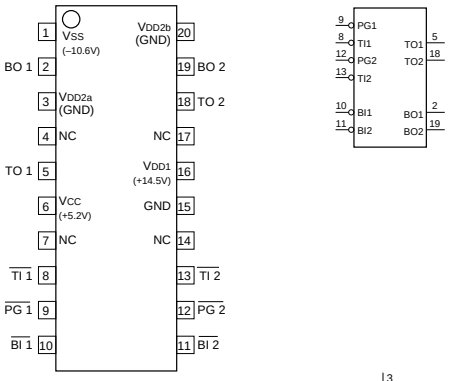

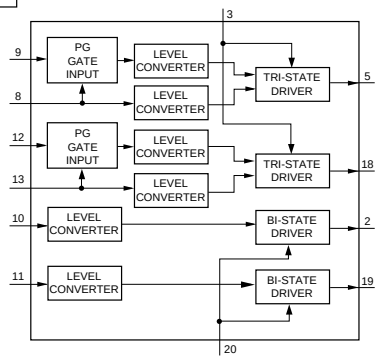

UPD4702G (NEC)

C-MOS INCREMENTAL ENCODER 8-BIT UP DOWN COUNTER
—TOP VIEW—

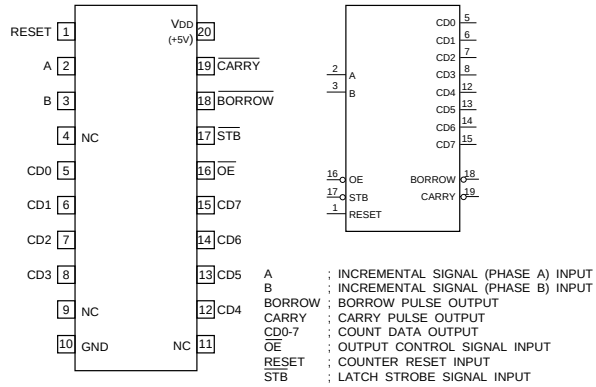

A ; INCREMENTAL SIGNAL (PHASE A) INPUT
B ; INCREMENTAL SIGNAL (PHASE B) INPUT
BORROW ; BORROW PULSE OUTPUT
CARRY ; CARRY PULSE OUTPUT
CD0-7 ; COUNT DATA OUTPUT
OE ; OUTPUT CONTROL SIGNAL INPUT
RESET ; COUNTER RESET INPUT
STB ; LATCH STROBE SIGNAL INPUT

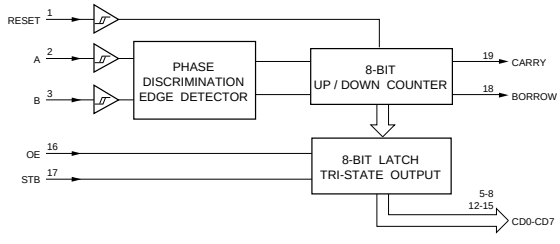

UPD42280GU-30 (NEC)FLAT PACKAGE
UPD42280GU-30-E2

C-MOS 2M (256 x 8) BIT FIELD BUFFER
—TOP VIEW—

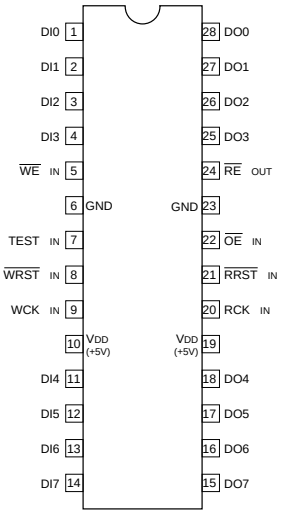

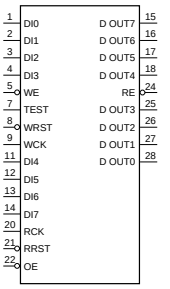

DI0 – 7 ; DATA INPUTS
DO0 – 7 ; DATA OUTPUTS
OE ; OUTPUT ENABLE INPUT
RCK ; READ CLOCK INPUT
RE ; READ ENABLE OUTPUT
RRST ; READ RESET INPUT
TEST ; TEST INPUT
WCK ; WRITE CLOCK INPUT
WE ; WRITE ENABLE INPUT
WRST ; WRITE RESET INPUT

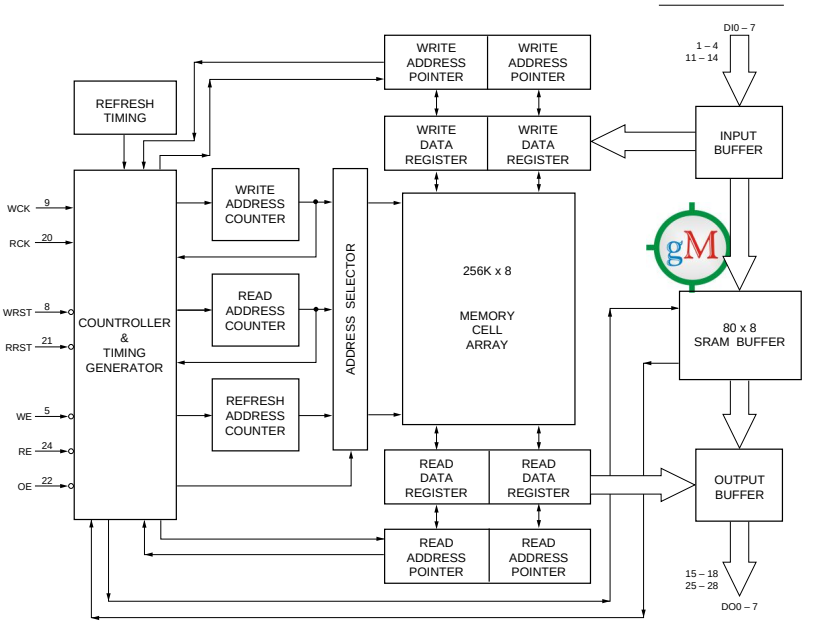

UPD4516161G5-A12-7JF (NEC)FLAT PACKAGE

C-MOS 16M(512K WORD × 16-BIT × 2)-BIT DYNAMIC RAM
– TOP VIEW–

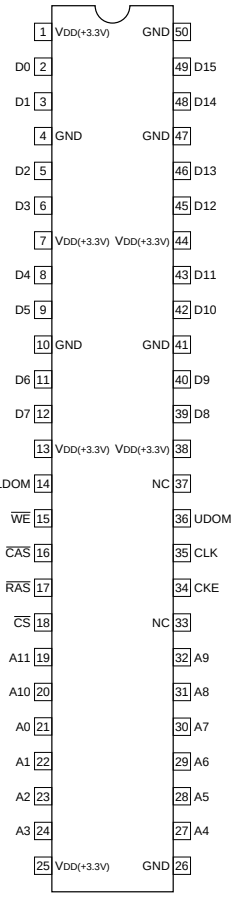

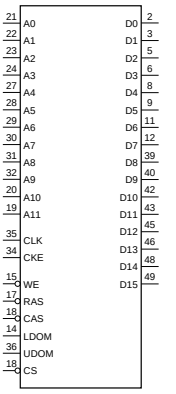

INPUT
A0 - A11 ; ADDRESS
CAS ; COLUMN ADDRESS STROBE
CKE ; CLOCK ENABLE
CLK ; SYSTEM CLOCK
CS ; CHIP SELECT
LDOM ; LOWER DATA I/O MASK ENABLE
RAS ; ROW ADDRESS STROBE
UDOM ; UPPER DATA I/O MASK ENABLE
WE ; WRITE ENABLE

I/O
D0 - D15 ; DATA

UPD6453GT-610 (NEC)FLAT PACKAGE
UPD6453GT-610-E2

C-MOS ON-SCREEN CHARACTER DISPLAY
—TOP VIEW—

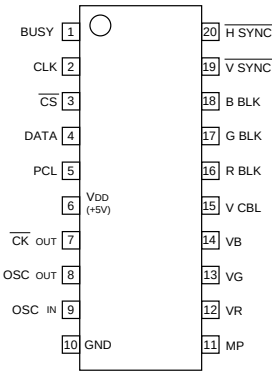

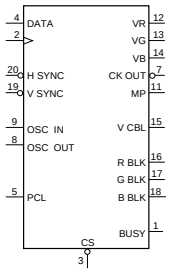

INPUT

CLK	;	CLOCK
CS	;	CHIP SELECT
DATA	;	SERIAL DATA
H SYNC	;	HORIZONTAL SYNC
OSC IN	;	OSCILLATOR IN
PCL	;	POWER ON CLEAR
V SYNC	;	VERTICAL SYNC

OUTPUT

BBLK, RBLK, GBLK	;	B, R, G, BLANKING
BUSY	;	BUSY OUT
CK OUT	;	CLOCK
MP	;	MASK PULSE
OSC OUT	;	OSCILLATOR OUT
VR, VG, VB	;	R, G, B, CHARACTER DATA
VCBL	;	VIDEO CUT BLANKING

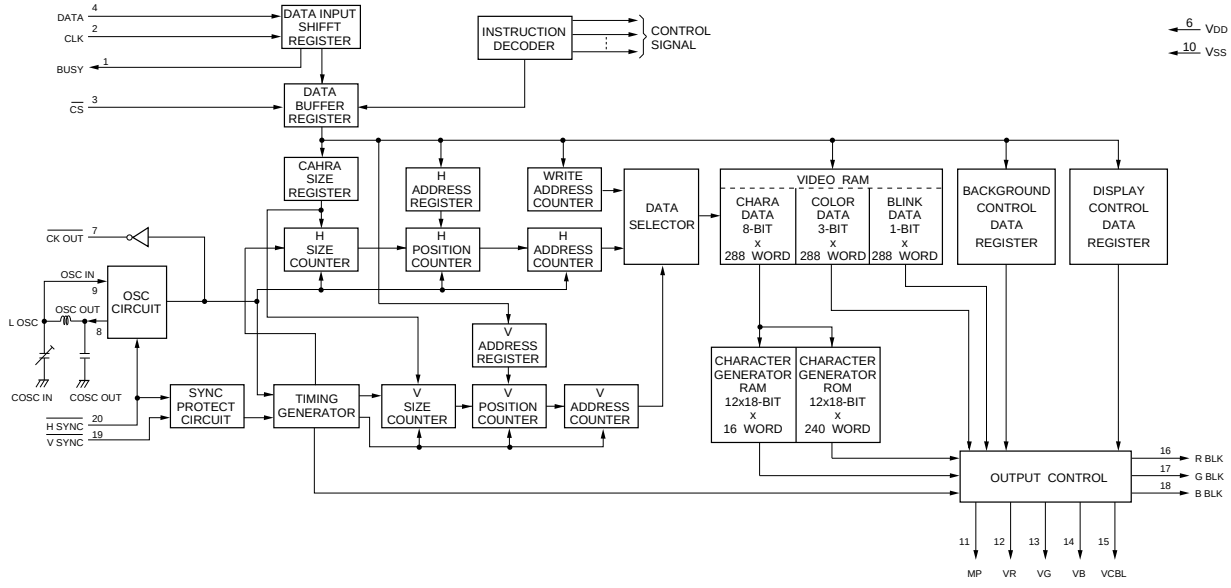

UPD6456GS-620 (NEC)FLAT PACKAGE
UPD6456GS-620-E2

C-MOS ON SCREEN CHARACTER DISPLAY
–TOP VIEW–

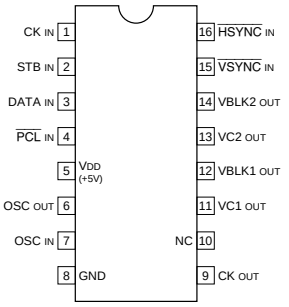

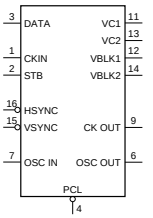

INPUT

CK IN	;	CLOCK FOR DATA READ
DATA	;	SERIAL DATA
$\overline{\text{HSYNC}}$	;	HORIZONTAL SYNC
OSC IN	;	OSCILLATOR FOR DOT CLOCK GENERATOR
$\overline{\text{PCL}}$	;	POWER ON CLEAR
STB	;	STROBE
$\overline{\text{VSYNC}}$	;	VERTICAL SYNC

OUTPUT

CK OUT	;	CLOCK FOR CHECK
OSC OUT	;	OSCILLATOR FOR DOT CLOCK GENERATOR
VBLK1	;	VIDEO BLANKING 1
VBLK2	;	VIDEO BLANKING 2
VC1	;	CHARACTER SIGNAL 1
VC2	;	CHARACTER SIGNAL 2

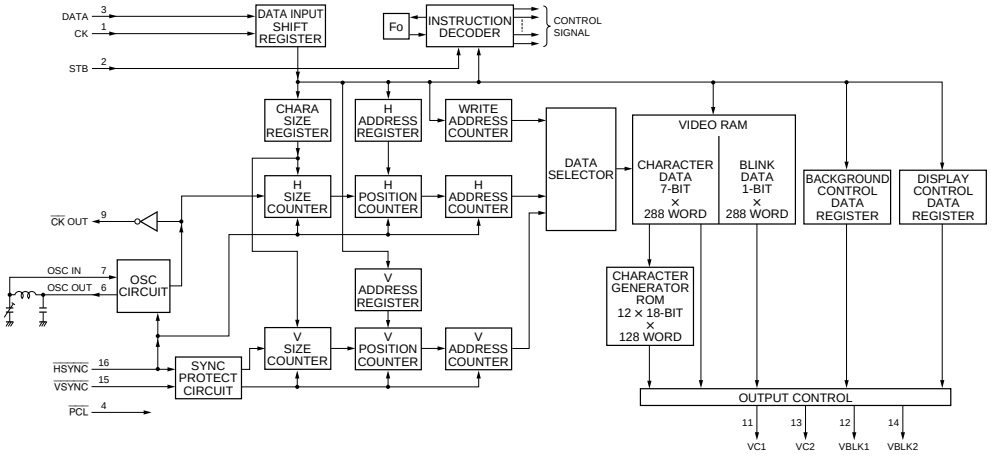

UPD72002GB-11-3B4 (NEC)

C-MOS MULTI-PROTOCOL SERIAL CONTROLLER
-TOP VIEW-

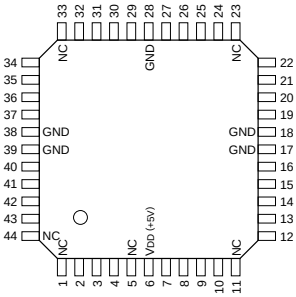

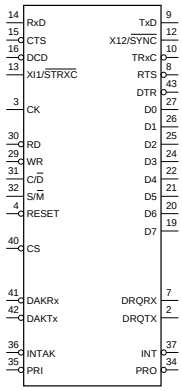

(V_{DD} = +5V)

PIN No.	I/O	SIGNAL	PIN No.	I/O	SIGNAL
1	—	NC	23	—	NC
2	O	DRQTx	24	I/O	D3
3	I	CLK	25	I/O	D2
4	I	$\overline{RESET}$	26	I/O	D1
5	—	NC	27	I/O	D0
6	—	V_{DD}	28	—	GND
7	O	DRQRx	29	I	$\overline{WR}$
8	O	$\overline{RTS}$	30	I	$\overline{RD}$
9	O	TxD	31	I	C/$\overline{D}$
10	I	$\overline{TRxC}$	32	I	S/$\overline{M}$
11	—	NC	33	—	NC
12	I/O	XI2/$\overline{SYNC}$	34	O	$\overline{PRO}$
13	I	XI1/$\overline{STRxC}$	35	I	$\overline{PRI}$
14	I	RxD	36	I	$\overline{INTAK}$
15	I	$\overline{CTS}$	37	O	$\overline{INT}$
16	I	$\overline{DCD}$	38	—	GND
17	—	GND	39	—	GND
18	—	GND	40	I	$\overline{CS}$
19	I/O	D7	41	I	$\overline{DAKRx}$
20	I/O	D6	42	I	$\overline{DAKTx}$
21	I/O	D5	43	O	$\overline{DTR}$
22	I/O	D4	44	—	NC

INPUT

C/$\overline{D}$	;	CONTROL/DATA SELECT
CK	;	SYSTEM CLOCK
CS	;	CHIP SELECT
CTS	;	CLEAR TO SEND
DAKRX	;	DMA ACKNOWLEDGE RX
DAKTX	;	DMA ACKNOWLEDGE TX
DCD	;	DATA CARRIER DETECT
INTAK	;	INTERRUPT ACKNOWLEDGE
PRI	;	PRIORITY
RD	;	READ ENABLE
RESET	;	RESET
RxD	;	RECEIVE DATA
S/$\overline{M}$	;	REGISTER SUB/MAIN SELECT
WR	;	WRITE ENABLE
XT1/STRXC	;	CRYSTAL INPUT 1/SOURCE OF TRANSMIT RECEIVE CLOCK

OUTPUT

DRQRX	;	DMA REQUEST RX
DRQTX	;	DMA REQUEST TX
DTR	;	DATA TERMINAL READY
INT	;	INTERRUPT
PRO	;	PRIORITY
RTS	;	REQUEST TO SEND
TxD	;	TRANSMIT DATA

INPUT/OUTPUT

D0 - D7	;	DATA BUS
TRxC	;	TRANSMIT RECEIVE CLOCK
XT2/$\overline{SYNC}$	;	CRYSTAL INPUT 2/SYNCHRONIZATION

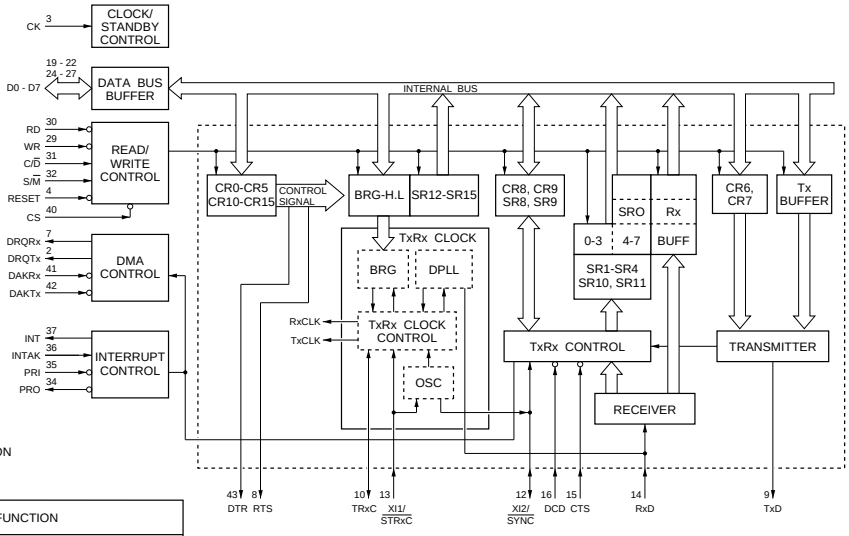

IINPUTS					FUNCTION
CS	WR	RD	S/$\overline{M}$	C/$\overline{D}$	
0	0	1	0	0	TRANSMIT DATA WRITE TO Tx BUFFER
0	1	0	0	0	RECEIVED DATA READ FROM Rx BUFFER
0	0	1	0	1	DATA WRITE TO CONTROL MAIN REGISTER
			1		DATA WRITE TO CONTROL SUB REGISTER
0	1	0	0	1	DATA READ FROM STATUS MAIN REGISTER
			1		DATA READ FROM STATUS SUB REGISTER
0	1	1	×	×	HIGH-IMPEDANCE
0	0	0	×	×	INHIBIT

0 ; LOW LEVEL
1 ; HIGH LEVEL
× ; DON'T CARE

UPD78014GC-574-AB8 (NEC)

C-MOS 8-BIT SIGNAL CHIP MICROCOMPUTER WITH MASK ROM
-TOP VIEW-

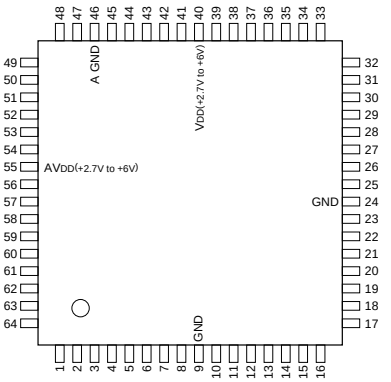

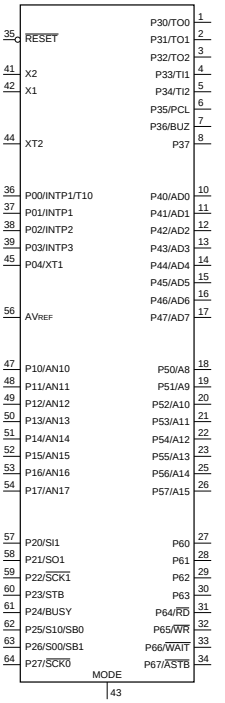

INPUT

ANI0 - ANI7	;	ANALOG 0 - 7
AVREF	;	ANALOG REFERENCE VOLTAGE
BUSY	;	BUSY
INTP0 - INTP3	;	INTERRUPT FROM PERIPHERALS 0 - 3
MODE	;	ROM-LESS MODE
P00, P04	;	PORT 0
P10 - P17	;	PORT 1
RESET	;	RESET
SI0, SI1	;	SERIAL 0, 1
TI0 - TI2	;	TIMER 0 - 2
WAIT	;	WAIT
X1, X2	;	CRYSTAL 1, 2 (MAIN SYSTEM CLOCK)
XT1, XT2	;	CRYSTAL 1, 2 (SUB SYSTEM CLOCK)

OUTPUT

A8 - A15	;	ADDRESS BUS 8 - 15
ASTB	;	ADDRESS STROBE
BUZ	;	BUZZER CLOCK
PCL	;	PROGRAMMABLE CLOCK
RD	;	READ STROBE
SO0, SO1	;	SERIAL 0, 1
STB	;	STROBE
TO0 - TO2	;	TIMER 0 - 2
WR	;	WRITE STROBE

INPUT/OUTPUT

AD0 - AD7	;	ADDRESS / DATA BUS 0 - 7
P01 - P03	;	PORT 0
P20 - P27	;	PORT 2
P30 - P37	;	PORT 3
P40 - P47	;	PORT 4
P50 - P57	;	PORT 5
P60 - P67	;	PORT 6
SB0, SB1	;	SERIAL BUS 0, 1
SCK0, SCK1	;	SERIAL CLOCK 0, 1

(AVDD = VDD = +2.7V to +6V)

PIN NO.	I/O	SIGNAL	PIN NO.	I/O	SIGNAL	PIN NO.	I/O	SIGNAL	PIN NO.	I/O	SIGNAL
1	I/O	P30/TO0	17	I/O	P47/AD7	33	I/O	P66/WAIT	49	I	P12/AN12
2	I/O	P31/TO1	18	I/O	P50/A8	34	I/O	P67/ASTB	50	I	P13/AN13
3	I/O	P32/TO2	19	I/O	P51/A9	35	I	RESET	51	I	P14/AN14
4	I/O	P33/T11	20	I/O	P52/A10	36	I	P00/INTP0/T10	52	I	P15/AN15
5	I/O	P34/T12	21	I/O	P53/A11	37	I/O	P01/INTP1	53	I	P16/AN16
6	I/O	P35/PCL	22	I/O	P54/A12	38	I/O	P02/INTP2	54	I	P17/AN17
7	I/O	P36/BUZ	23	I/O	P55/A13	39	I/O	P03/INTP3	55	—	AVDD
8	I/O	P37	24	—	GND	40	—	VDD	56	—	AVREF
9	—	GND	25	I/O	P56/A14	41	O	X2	57	I/O	P20/SI1
10	I/O	P40/AD0	26	I/O	P57/A15	42	I	X1	58	I/O	P21/SO1
11	I/O	P41/AD1	27	I/O	P60	43	—	MODE	59	I/O	P22/SCK1
12	I/O	P42/AD2	28	I/O	P61	44	—	XT2	60	I/O	P23/STB
13	I/O	P43/AD3	29	I/O	P62	45	I	P04/XT1	61	I/O	P24/BUSY
14	I/O	P44/AD4	30	I/O	P63	46	—	A GND	62	I/O	P25/S10/SB0
15	I/O	P45/AD5	31	I/O	P64/RD	47	I	P10/AN10	63	I/O	P26/S00/SB1
16	I/O	P46/AD6	32	I/O	P65/WR	48	I	P11/AN11	64	I/O	P27/SCK0

TYPE	ROM SIZE	RAM SIZE
UPD78011	8192-BYTE	544-BYTE
UPD78012	16384-BYTE	544-BYTE
UPD78013	24576-BYTE	1056-BYTE
UPD78014	32768-BYTE	1056-BYTE

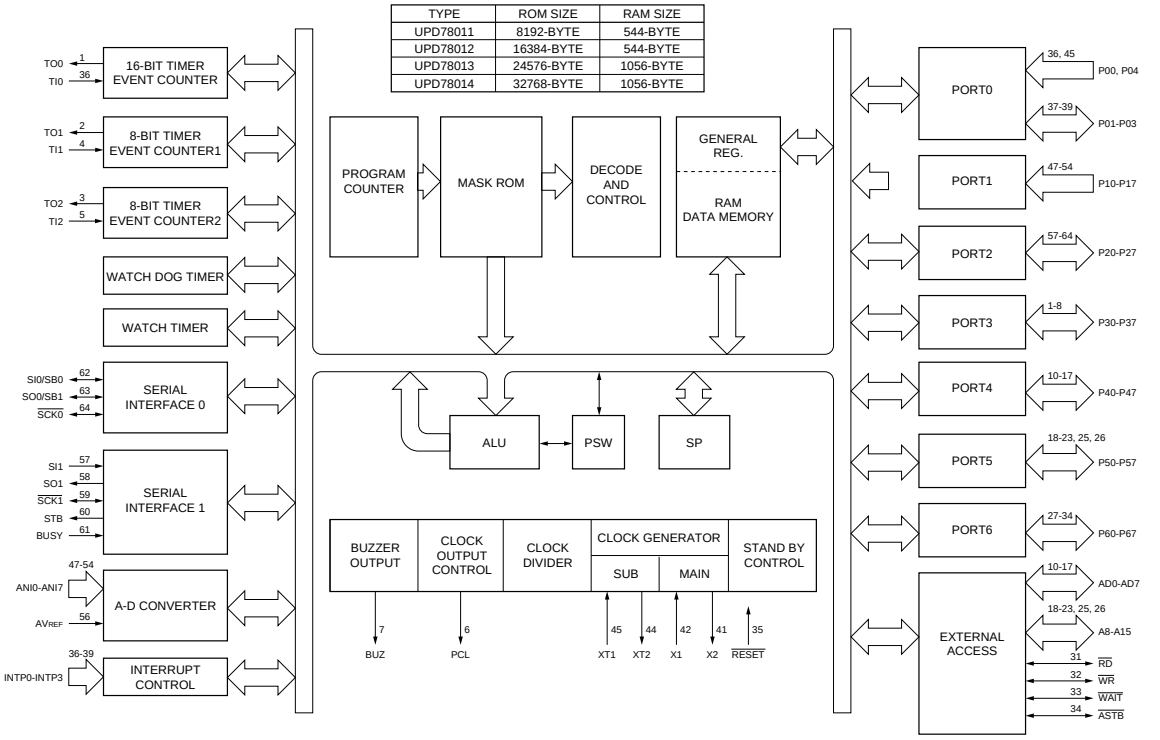

http://getMANUAL.com

UPD4516821G5-A12-7JF (NEC)FLAT PACKAGE

C-MOS 16M(1M WORD × 8-BIT × 2)-BIT DYNAMIC RAM

– TOP VIEW–

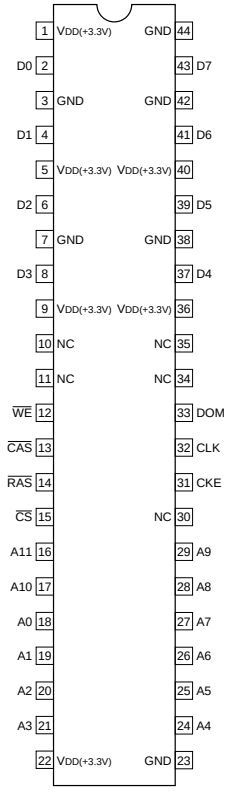

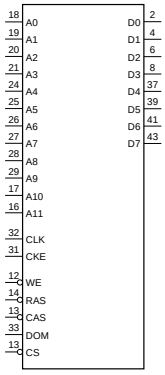

INPUT

A0 - A11 ; ADDRESS
$\overline{CAS}$; COLUMN ADDRESS STROBE
CKE ; CLOCK ENABLE
CLK ; SYSTEM CLOCK
$\overline{CS}$; CHIP SELECT
DOM ; DATA I/O MASK ENABLE
$\overline{RAS}$; ROW ADDRESS STROBE
$\overline{WE}$; WRITE ENABLE

I/O

D0 - D7 ; DATA

WS57C010F-70C (WAFERSCALE)

C-MOS 128K × 8-BIT HIGH SPEED UV EPROM

–TOP VIEW–

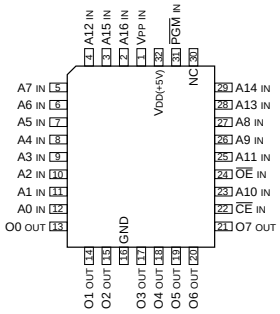

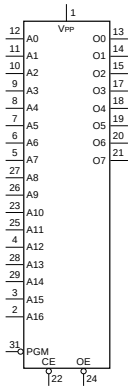

A0 - A16 ; ADDRESS INPUTS
$\overline{CE}$; CHIP ENABLE INPUT
$\overline{OE}$; OUTPUT ENABLE INPUT
O0 - O7 ; DATA OUTPUTS
$\overline{PGM}$; PROGRAM INPUT

A0	A9	CE	OE	OUTPUTS	PGM	VCC	VPP	FUNCTION
×	×	0	0	DATA OUT	×	5.0V	×	READ
×	×	×	1	HI-Z	×	5.0V	×	OUTPUT DISABLE
×	×	1	×	HI-Z	×	5.0V	×	STANDBY
×	×	0	1	DATA IN	0	6.25V	VPP	PROGRAMMING
×	×	0	0	DATA OUT	1	6.25V	VPP	PROGRAM VERIFY
×	×	1	×	HI-Z	×	5.0V	VPP	PROGRAM INHIBIT

0 ; LOW LEVEL
1 ; HIGH LEVEL
× ; DON'T CARE
HI-Z ; HIGH IMPEDANCE
VPP ; PROGRAM POWER SUPPLY (12.75 ± 0.25V)

UPD485505G-35 (NEC)FLAT PACKAGE
UPD485505G-35-E2

C-MOS 40K (5,048 x 8)-BIT FIFO MEMORY

—TOP VIEW—

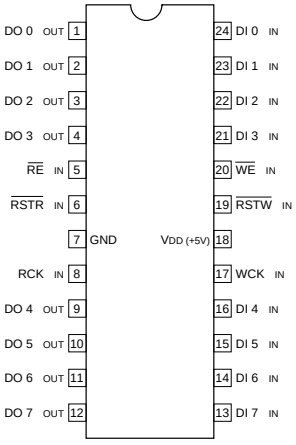

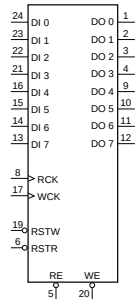

DI 0 – 7 ; DATA INPUTS
DO 0 – 7 ; DATA OUTPUTS
RCK ; READ CLOCK INPUT
$\overline{RE}$; READ ENABLE INPUT
$\overline{RSTR}$; RESET READ INPUT
$\overline{RSTW}$; RESET WRITE INPUT
WCK ; WRITE CLOCK INPUT
$\overline{WE}$; WRITE ENABLE INPUT

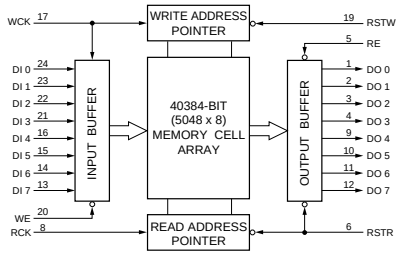

X24164SIC7000 (XICOR)(16K BIT)FLAT PACKAGE
X24C02P (XICOR)
X24C02S-3.0 (XICOR)(2K BIT)FLAT PACKAGE
X24C02S-3.0-C7000

C-MOS SERIAL EEPROM

-TOP VIEW-

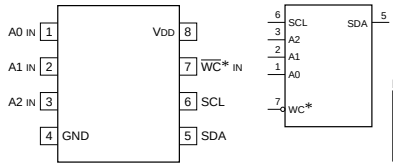

NOTE :

TYPE	VDD
X24C02S-3.0	+2.7 to +5.5V
NM24C16LEM8	+2.5 to +5.5V
OTHER TYPES	+5V

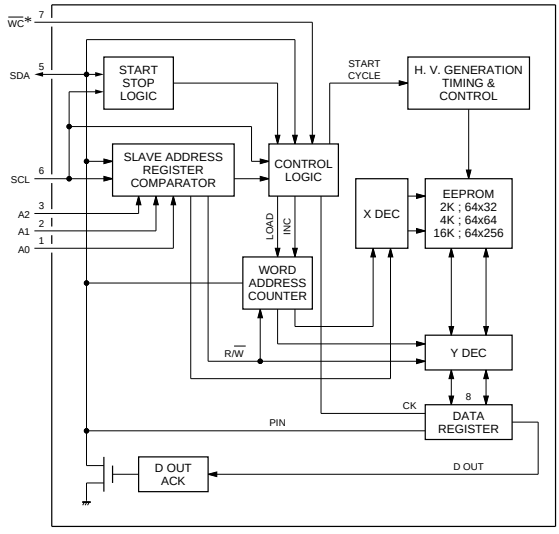

* : TEST (at X24164SIC7000)
NC(at NM24C16LEM8)

X24C16SI (XICOR)FLAT PACKAGE
X24C16SI-C7000

C-MOS 16384 (2048×8)-BIT SERIAL EEPROM
–TOP VIEW–

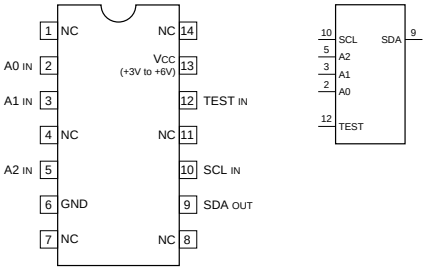

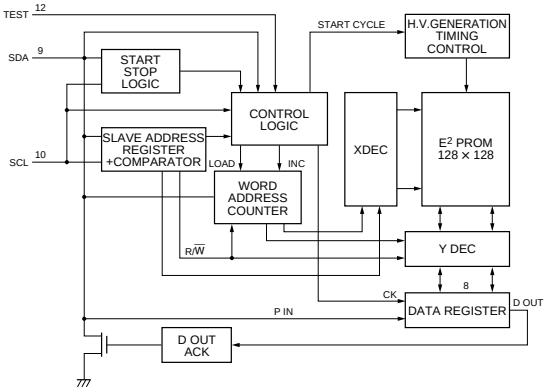

Section 3
Block Diagrams

System Configuration	Board Name	Function Name	Page of Block Diagram	Page of Board Layout	Page of Schematic Diagram
CCD BLOCK	BI-96※W	CCD Imager (R, G, B)	3-16	4-29	5-119
	CN-1183※W	Connector Board for BI-96	3-16	4-29	5-118
	DR-291※W	CCD Driver	3-16	4-30	5-120
	PA-186※W	Pre-amp (Sample & Hold)	3-16	4-30	5-122
	TG-161※W7	Timing Generator	3-16	4-31	5-126
	TG-164※W90	Timing Generator	3-16		5-128
	VA-167※W	Video Amp	3-15	4-31	5-124
CAMERA/VIDEO	CN-1193※SD	Connector Board for DCP-1	3-8	4-5	5-19
	CT-187※V5	Camera Adaptor Control, 6P-remote Control, Setting Menu	3-12	4-4	5-4
	DCP-1※W	Camera Processor	3-8	4-7	5-6
	DVP-1	RF, Digital Audio Processor, Timing Clock Generator, System Controller for VTR Block	3-7	4-9	5-20
	DVP-2	Digital Bit Reduction Decoder, Digital Encoder, Digital Decoder	3-7	4-10	5-34
	ES-11※W	Composite Encoder	–	4-15	5-46
	IF-634※V5	50-pin Interface, Video Input/Output	3-12	4-13	5-50
	PA-203※V5	Audio Pre-amp for 50-pin	3-4	4-20	5-59
	RC-61※WS	Rate (16:9 to 4:3) Converter	3-8		5-60
	TC-80	Analog Audio Processor, Time Code Generator	3-10	4-16	5-62※V5 5-72※W
DRUM/SERVO	HN-224	Harness, TC Amp	3-4	4-20	5-81
	MDC-5	Servo Controller	3-13	4-18	5-82
	MDR-1	Drum Motor Driver	3-4	4-20	5-86
MICROPHONE	AIF-8※W	Lens Control, Mic Amp	3-4	4-21	5-87
	MA-68※W	Camera Mic Pre-amp	–	4-21	5-88
	SW-789※W	Mic Level, Auto White/Black SW, VTR Start/Stop SW, Shutter On/Off Select SW	3-4	4-21	5-134
POWER SUPPLY	DC-87	Battery DC Filter	–	4-22	5-89
	PS-390	Power Supply (Light)	3-4	4-22	5-89
	RE-118	Regulator, Switching Control	3-14	4-23	5-90※V5 5-92※W
	RE-119	Regulator	3-14	4-23	5-94※V5 5-96※W
CONNECTOR BOX	AL-40	Audio CH-2 Line Out Amp	–	4-24	5-98
	AXM-14	Connector (AUDIO IN/OUT), Audio Pre-amp	3-4	4-24	5-99
	CNB-1	Circuit Breaker, Audio CH-1 Line Out Amp	3-4	4-24	5-100※V5 5-104※W
	CO-22	Connector (VBS OUT)	3-4	4-25	5-131, 135
	CT-185※V5	Power Supply for 50-pin	3-6	4-24	5-98
	DC-88	External DC Filter	–		5-131, 135
	IO-117	Connector (GEN LOCK IN, TEST OUT, TC IN, TC OUT)	3-4	4-25	5-107

System Configuration	Board Name	Function Name	Page of Block Diagram	Page of Board Layout	Page of Schematic Diagram
OTHERS	CI-12	40-pin Adaptor Interface	3-4	4-25	5-108
	HP-70	Earphone	3-4	4-25	5-131, 135
	KY-293	Function Key	–	4-26	5-130, 134
	LP-86※W	Back Tally, Back Tally Switch	–	4-26	5-135
	LP-102※V5	Back Tally, Back Tally Switch	–	4-26	5-131
	PSW-33※W	Power Switch	3-4	4-26	5-134
	PSW-55※V5	Power Switch	3-6	4-26	5-130
	RX-26	Audio Pre-amp for Wireless Microphone	3-4	4-26	5-109
	SW-780※W	Switch Panel	3-4	4-26	5-109
	SW-808※W	Rotary Encoder Switch	3-4	4-27	5-134
	SW-823※W	Menu and Light Auto/Manual Switch	3-4	4-27	5-135
	SW-873※V5	Menu and Light Auto/Manual Switch	–	4-27	5-130
	SW-882※V5	Rotary Encoder Switch	–	4-27	5-130
	MB-627	Mother Board	–	4-28	5-110※V5 5-114※W

※SD : For DNW-7/7P/90/90P only
※V5 : For DNV-5 only
※W : For DNW-7/7P/90/90P/90WS/90WSP only
※W7 : For DNW-7/7P only
※W90 : For DNW-90/90P/90WS/90WSP only
※WS : For DNW-90WS/90WSP only

3-2

DNW-7/7P/90/90P/90WS/90WSP

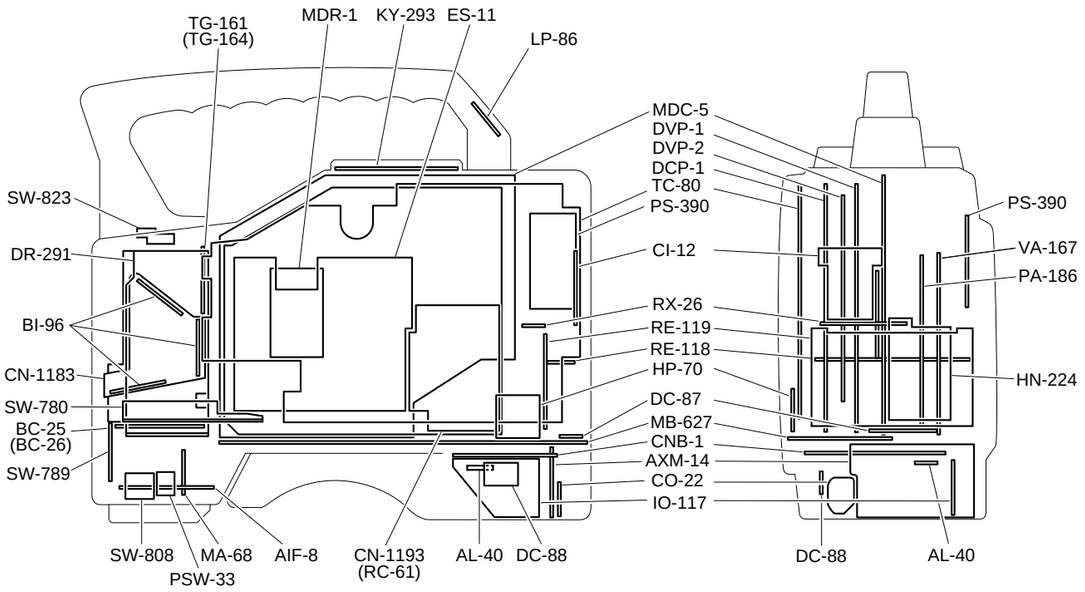

DNV-5

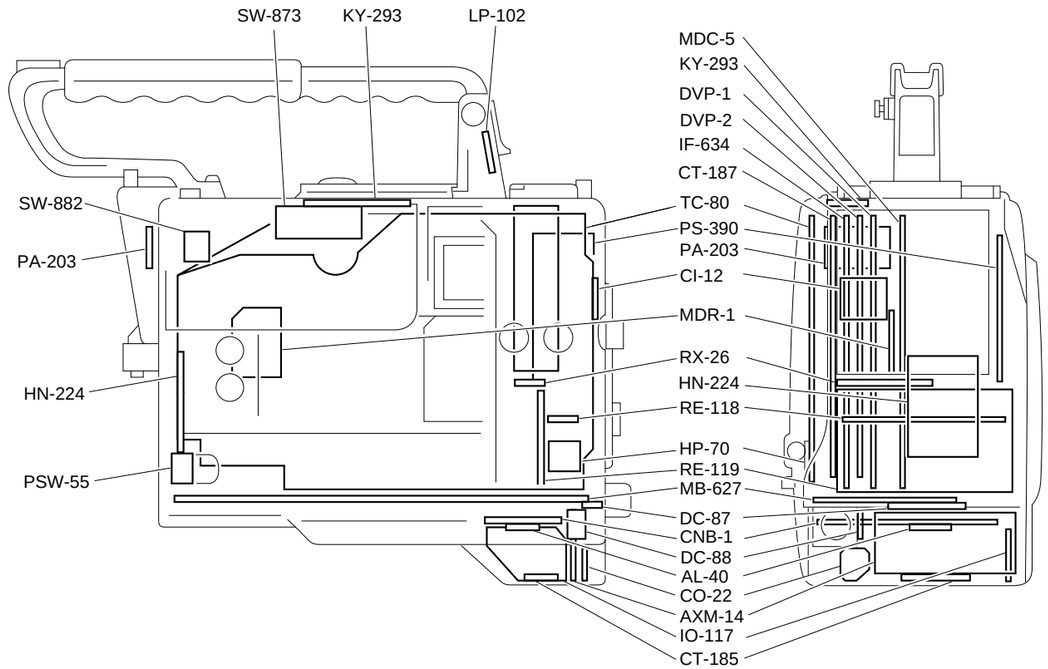

OVERALL(DNW-7/90/90WS) Block Diagram

DNW-7/90/90WS (SY) : S/N 10001 and Higher
DNW-7/90/90WS (J) : S/N 30001 and Higher
DNW-7P/90P/90WSP (SY) : S/N 40001 and Higher

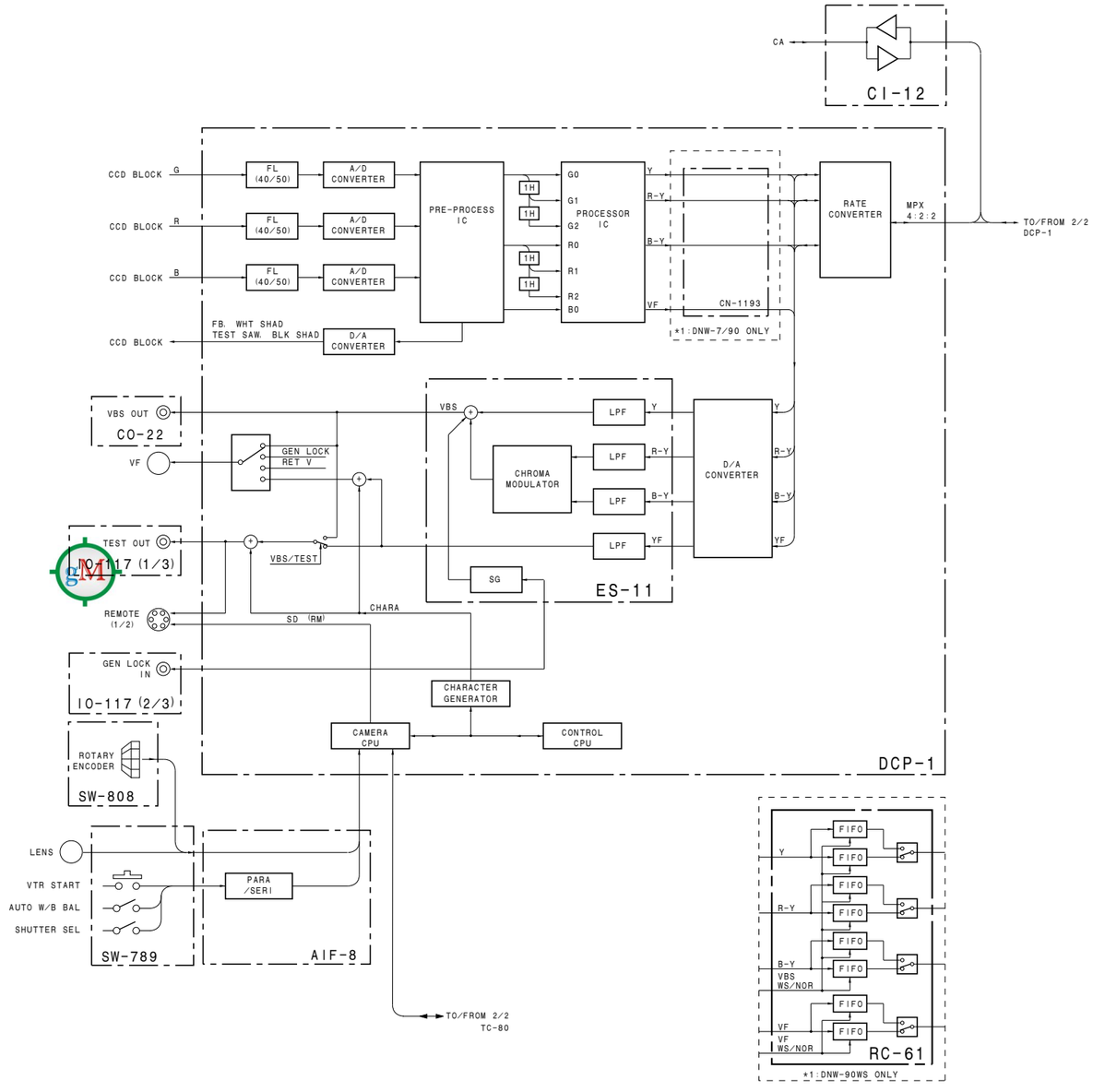

OVERALL(DNW-7/90/90WS) Block Diagram

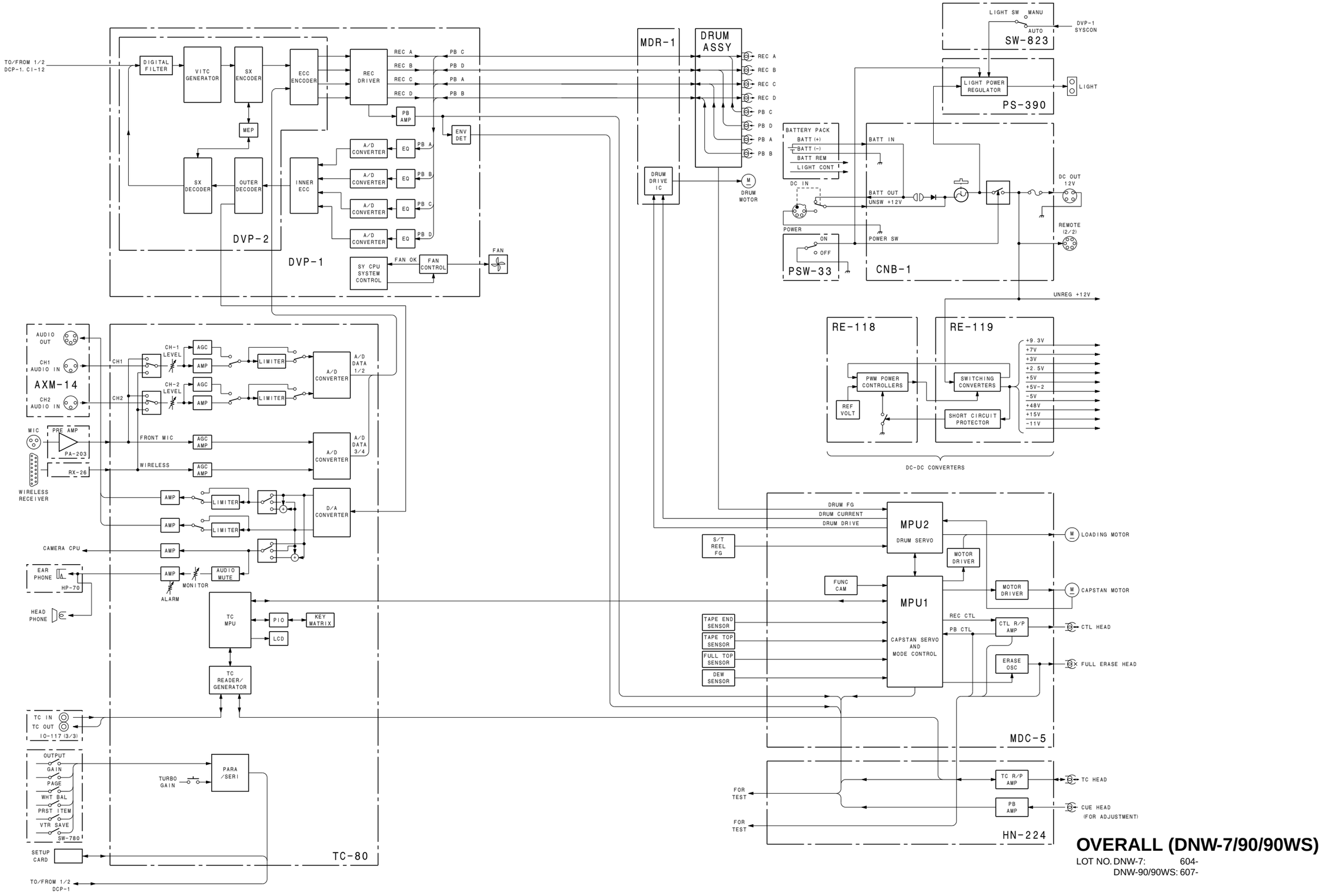

OVERALL (DNW-7/90/90WS)

LOT NO. DNW-7: 604-
DNW-90/90WS: 607-

DNV-5 (SY) : S/N 10001 and Higher
DNV-5 (J) : S/N 30001 and Higher

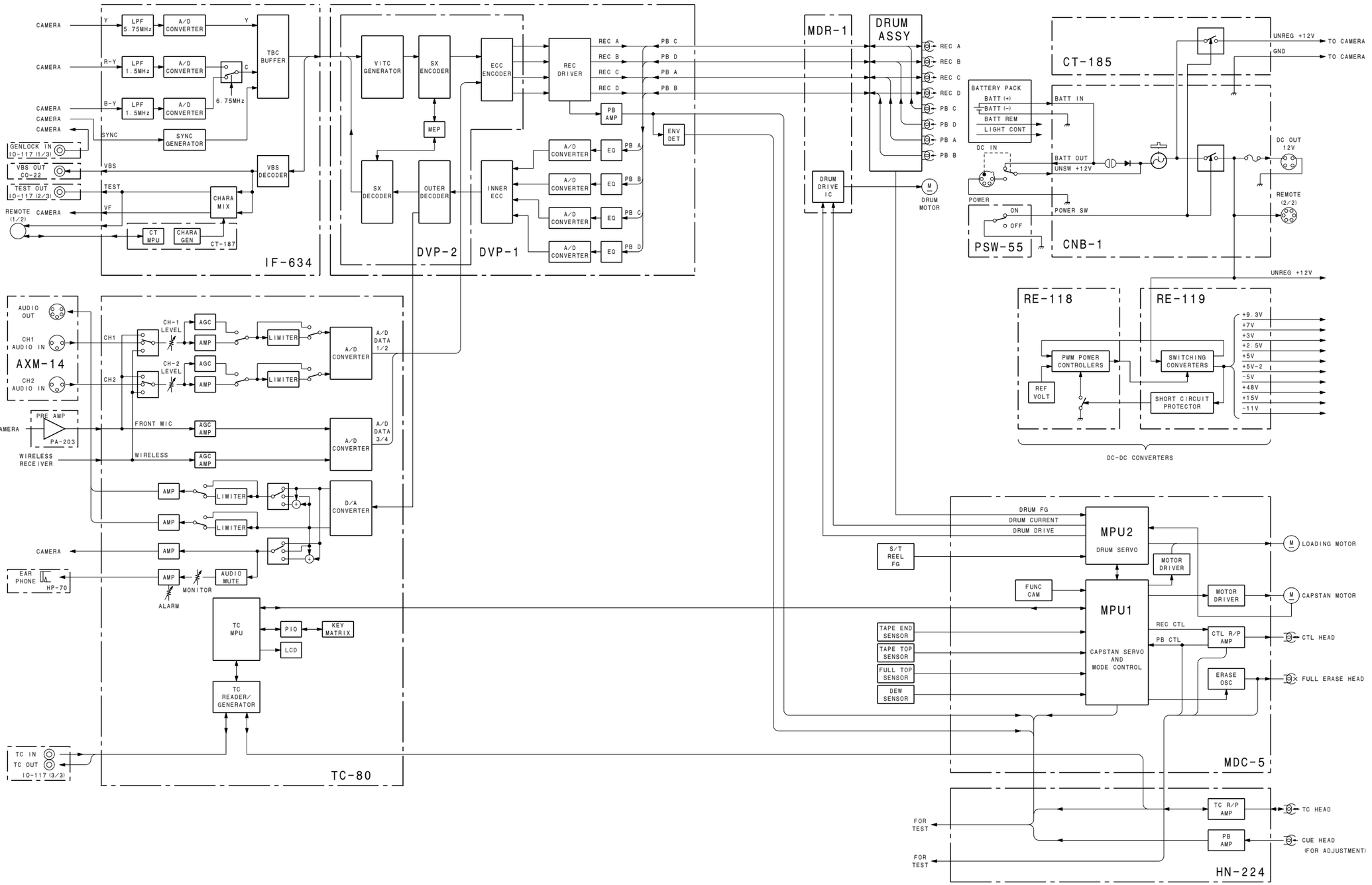

OVERALL (DNV-5)

LOT NO. DNV-5: 605-

DNV-5 (SY) : S/N 10001 and Higher
DNV-5 (J) : S/N 30001 and Higher
DNW-7/90/90WS (SY) : S/N 10001 and Higher
DNW-7/90/90WS (J) : S/N 30001 and Higher
DNW-7P/90P/90WSP (SY) : S/N 40001 and Higher

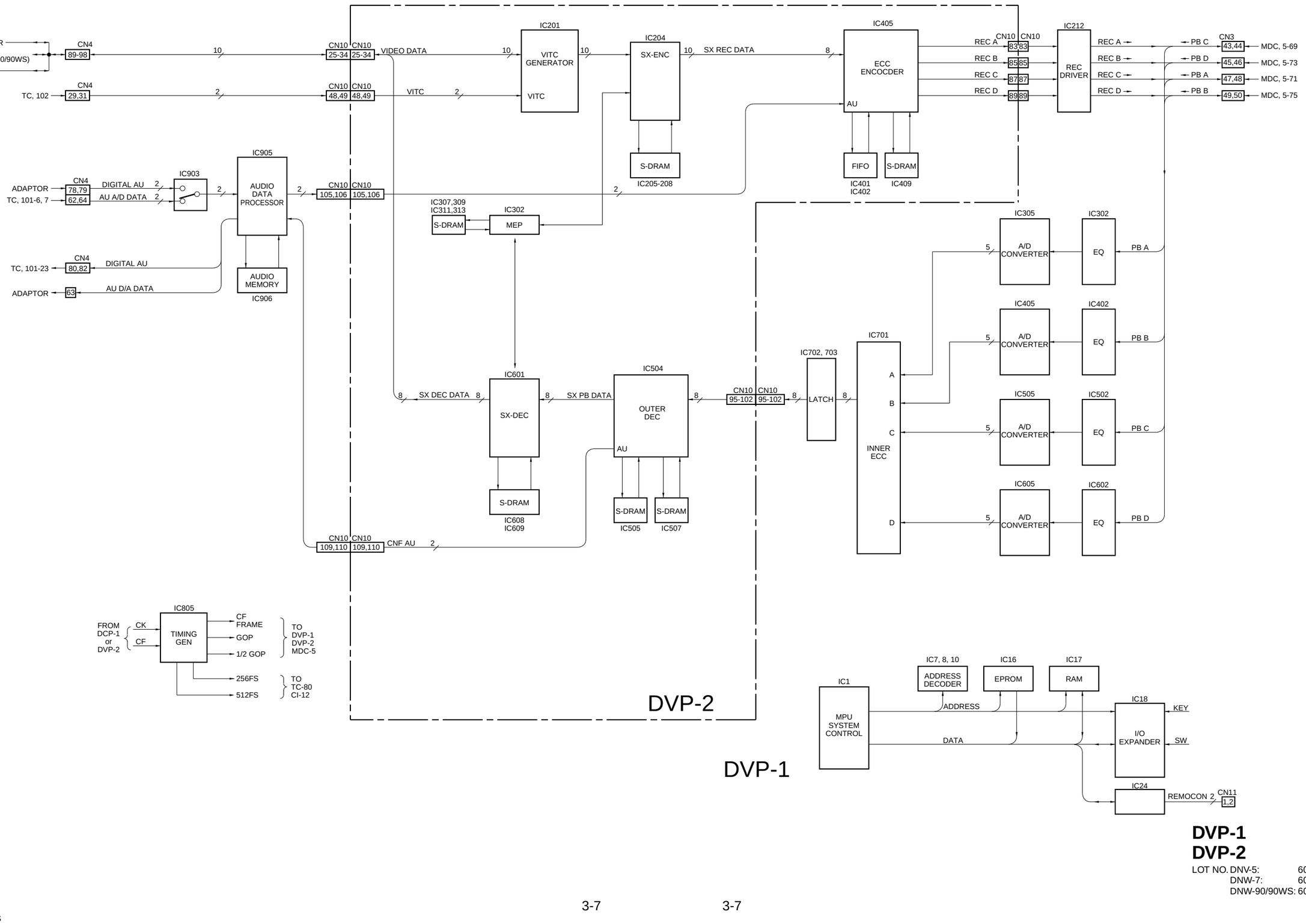

DVP-1
DVP-2

LOT NO. DNV-5: 605-
DNW-7: 604-
DNW-90/90WS: 607-

DNW-7/90/90WS (SY) : S/N 10001 and Higher
DNW-7/90/90WS (J) : S/N 30001 and Higher
DNW-7P/90P/90WSP (SY) : S/N 40001 and Higher

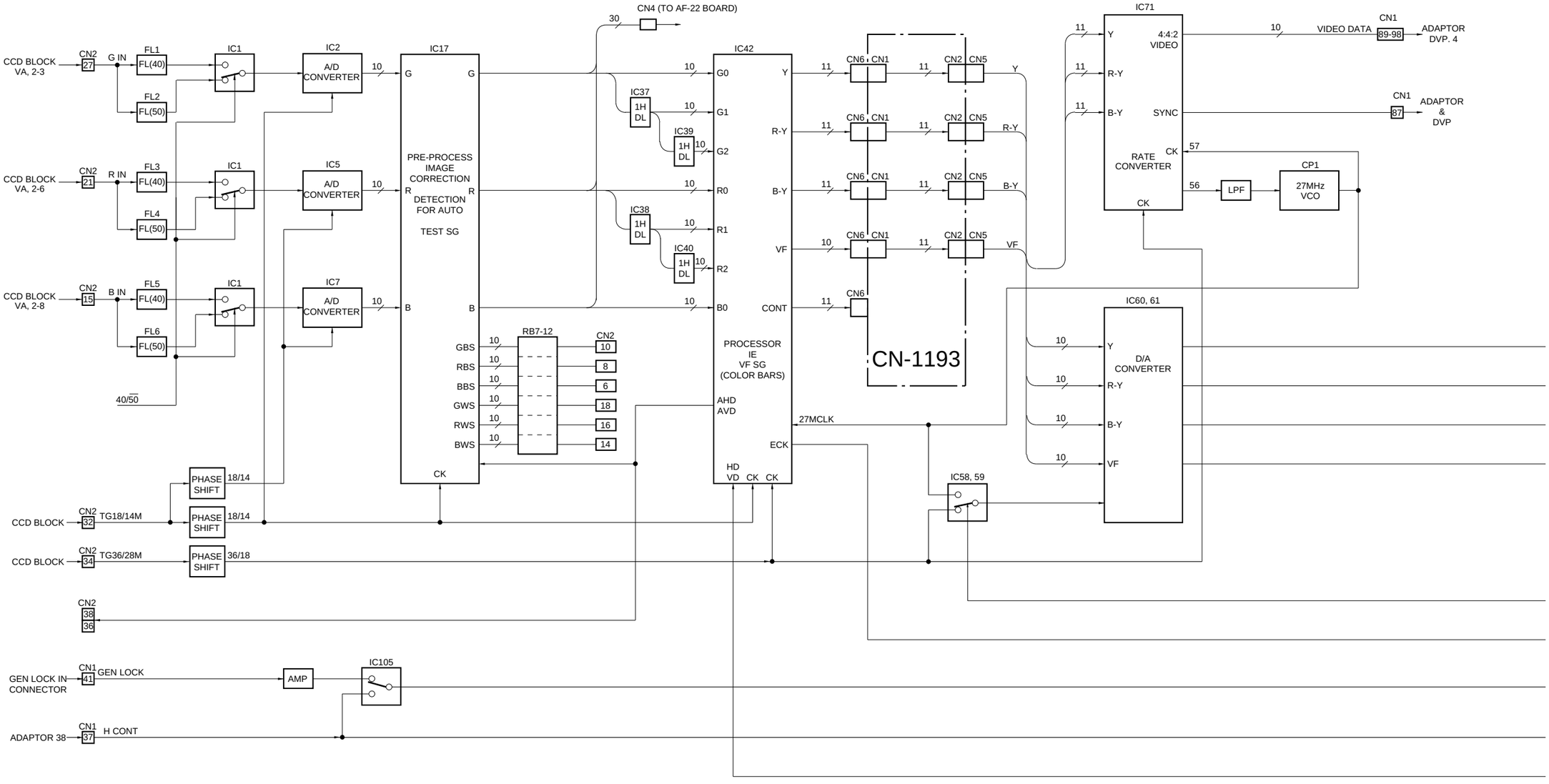

http://getMANUAL.com
DCP-1, ES-11 Block Diagram

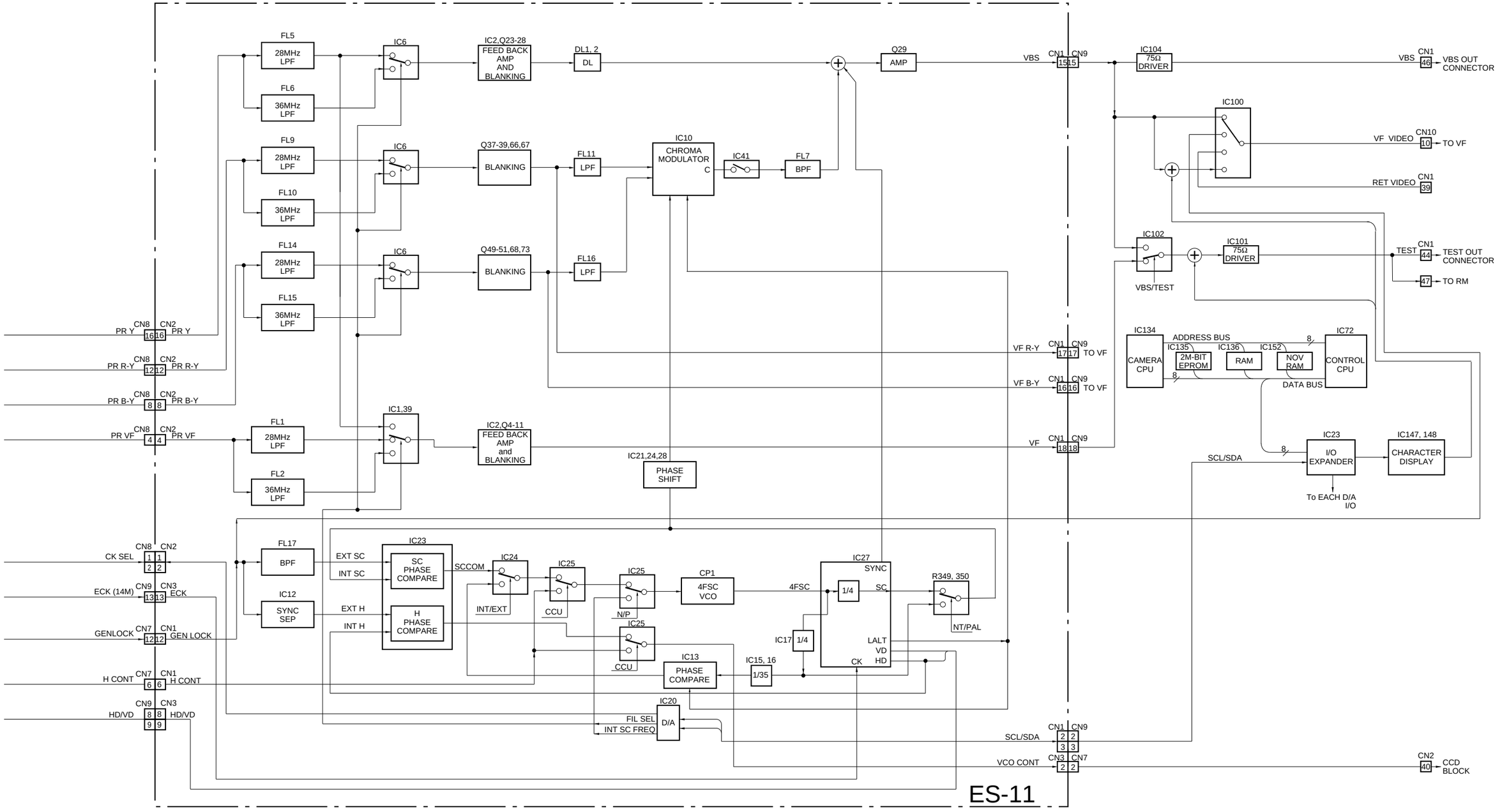

DCP-1
ES-11
LOT NO. DNW-7: 604-
DNW-90/90WS: 607-

TC-80 (1/2) Block Diagram

DNV-5 (SY) : S/N 10001 and Higher
DNV-5 (J) : S/N 30001 and Higher
DNW-7/90/90WS (SY) : S/N 10001 and Higher
DNW-7/90/90WS (J) : S/N 30001 and Higher
DNW-7P/90P/90WSP (SY) : S/N 40001 and Higher

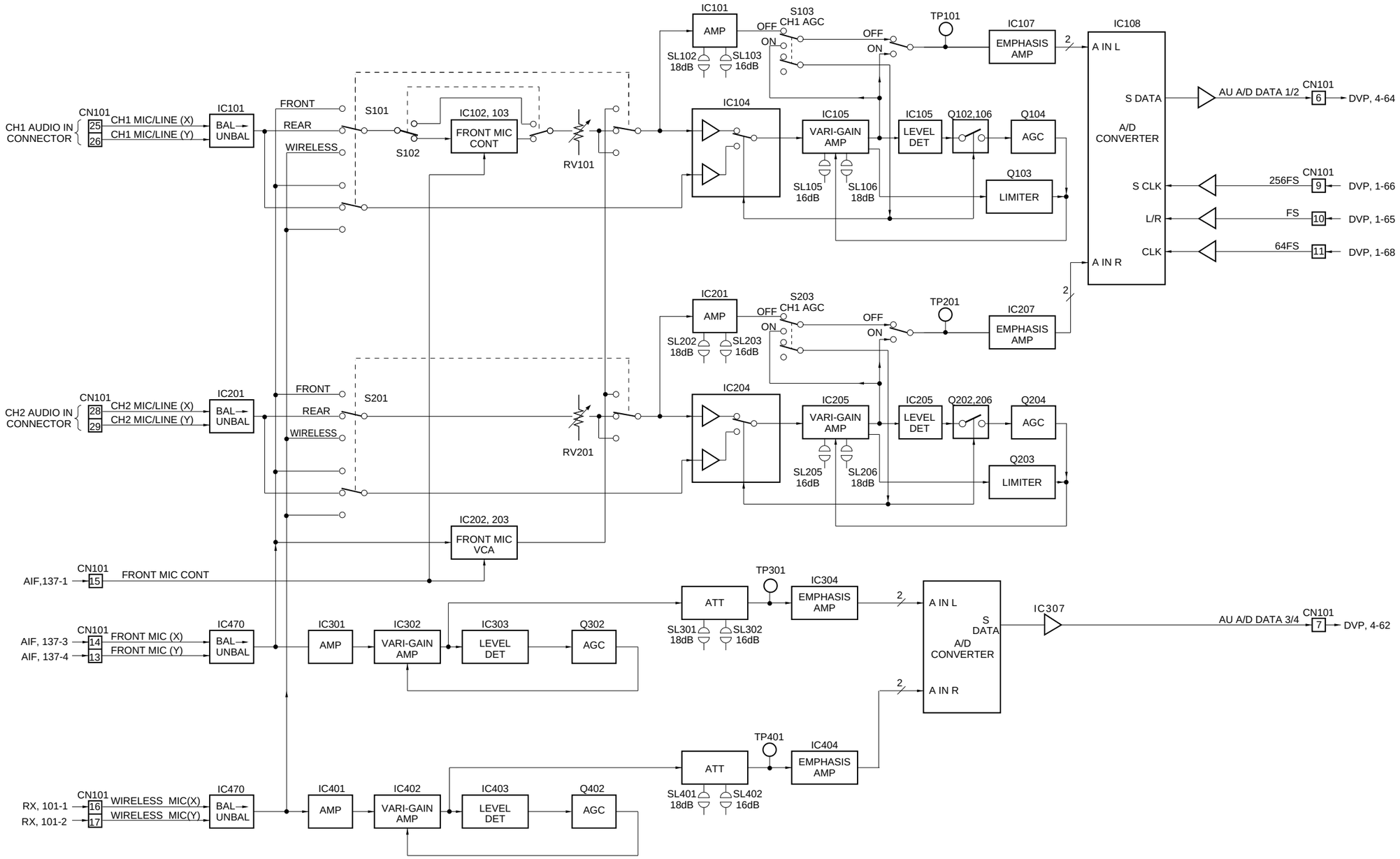

TC-80 (1/2)

LOT NO. DNV-5: 605-
DNW-7: 604-
DNW-90/90WS: 607-

DNV-5 (SY) : S/N 10001 and Higher
DNV-5 (J) : S/N 30001 and Higher
DNW-7/90/90WS (SY) : S/N 10001 and Higher
DNW-7/90/90WS (J) : S/N 30001 and Higher
DNW-7P/90P/90WSP (SY) : S/N 40001 and Higher

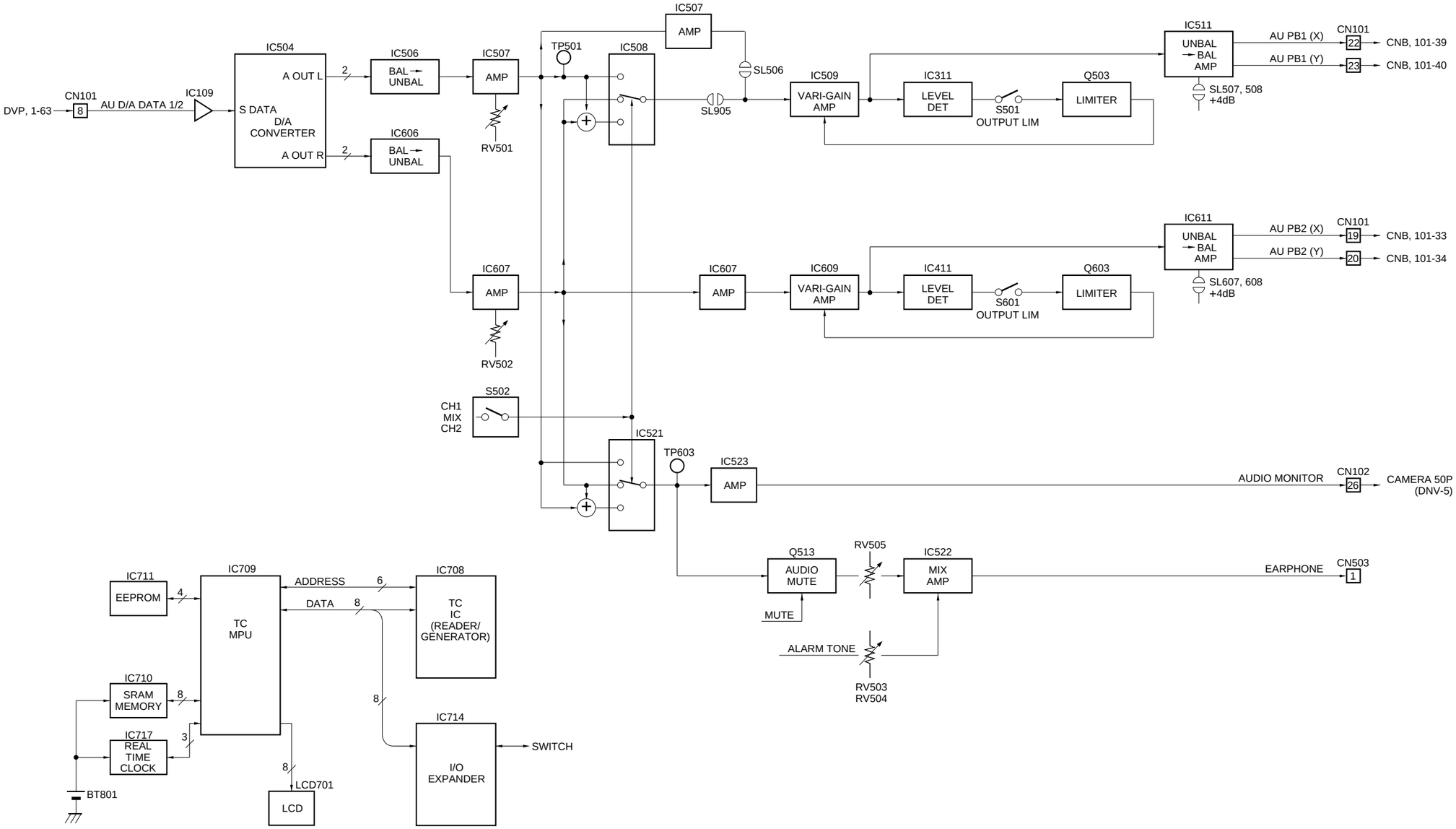

TC-80 (2/2)

LOT NO. DNV-5: 605-
DNW-7: 604-
DNW-90/90WS: 607-

DNV-5 (SY) : S/N 10001 and Higher
DNV-5 (J) : S/N 30001 and Higher

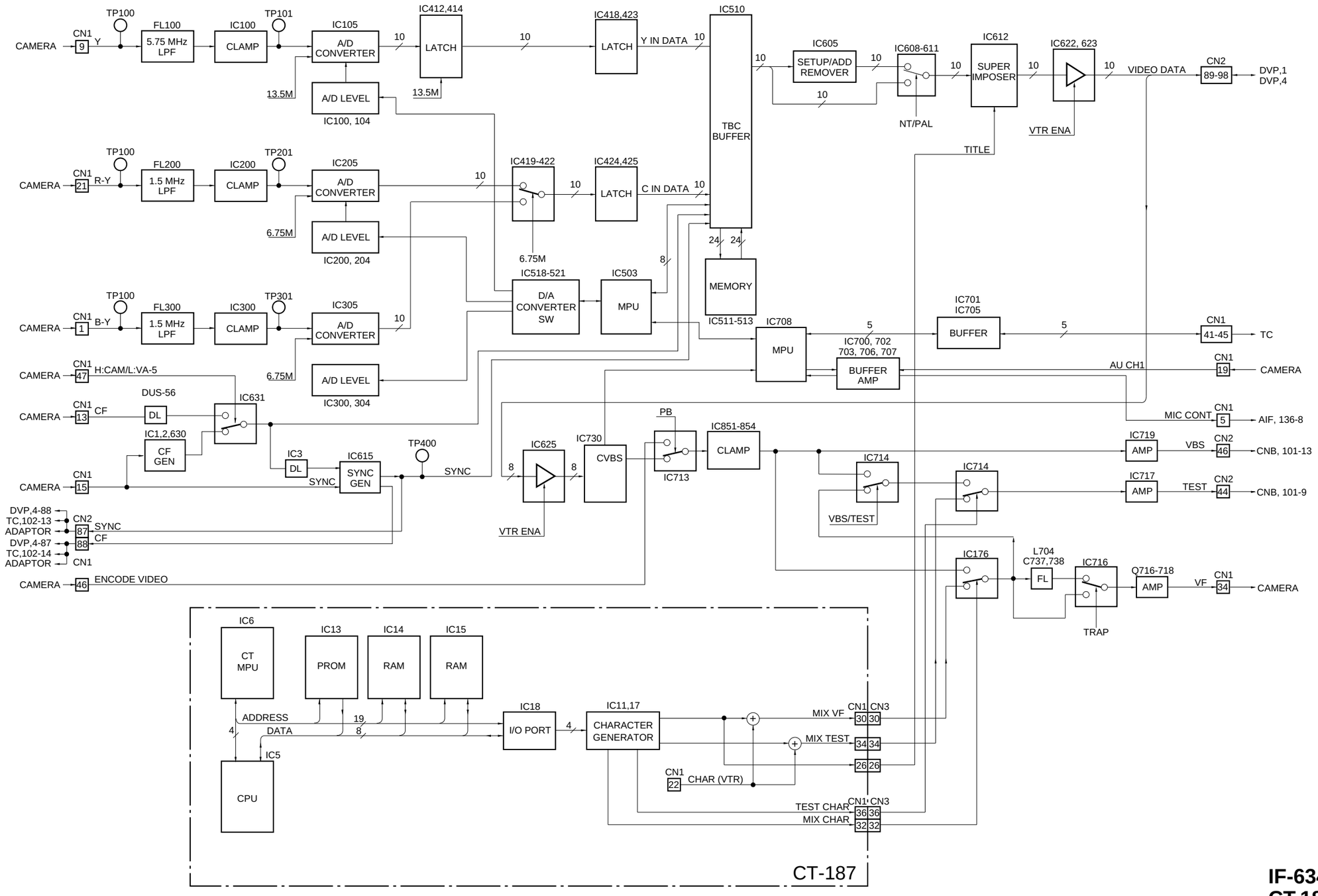

IF-634
CT-187
LOT NO. DNV-5: 605-

DNV-5 (SY) : S/N 10001 and Higher
DNV-5 (J) : S/N 30001 and Higher
DNW-7/90/90WS (SY) : S/N 10001 and Higher
DNW-7/90/90WS (J) : S/N 30001 and Higher
DNW-7P/90P/90WSP (SY) : S/N 40001 and Higher

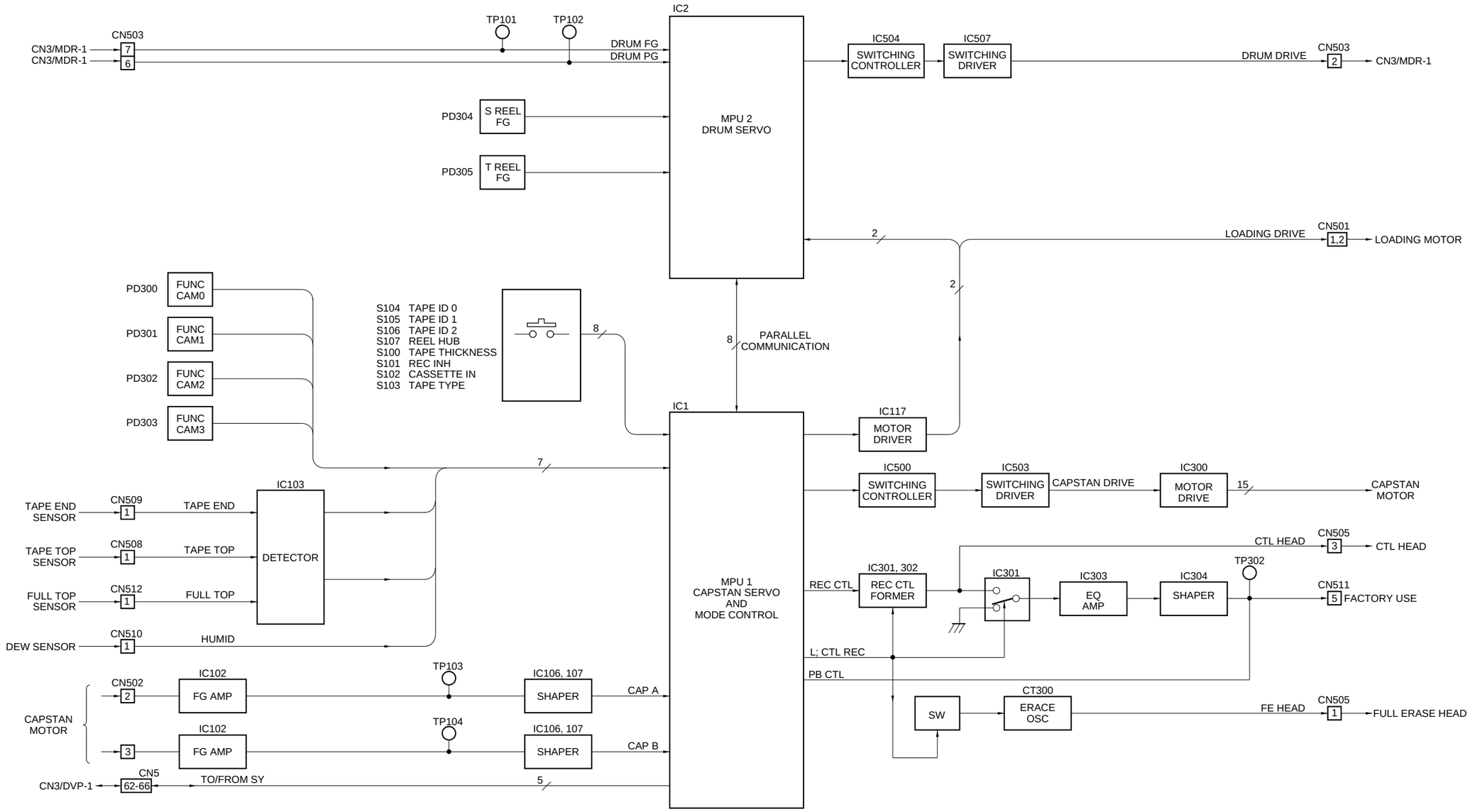

MDC-5
LOT NO. DNV-5: 605-
DNW-7: 604-
DNW-90/90WS: 607-

DNV-5 (SY) : S/N 10001 and Higher
DNV-5 (J) : S/N 30001 and Higher
DNW-7/90/90WS (SY) : S/N 10001 and Higher
DNW-7/90/90WS (J) : S/N 30001 and Higher
DNW-7P/90P/90WSP (SY) : S/N 40001 and Higher

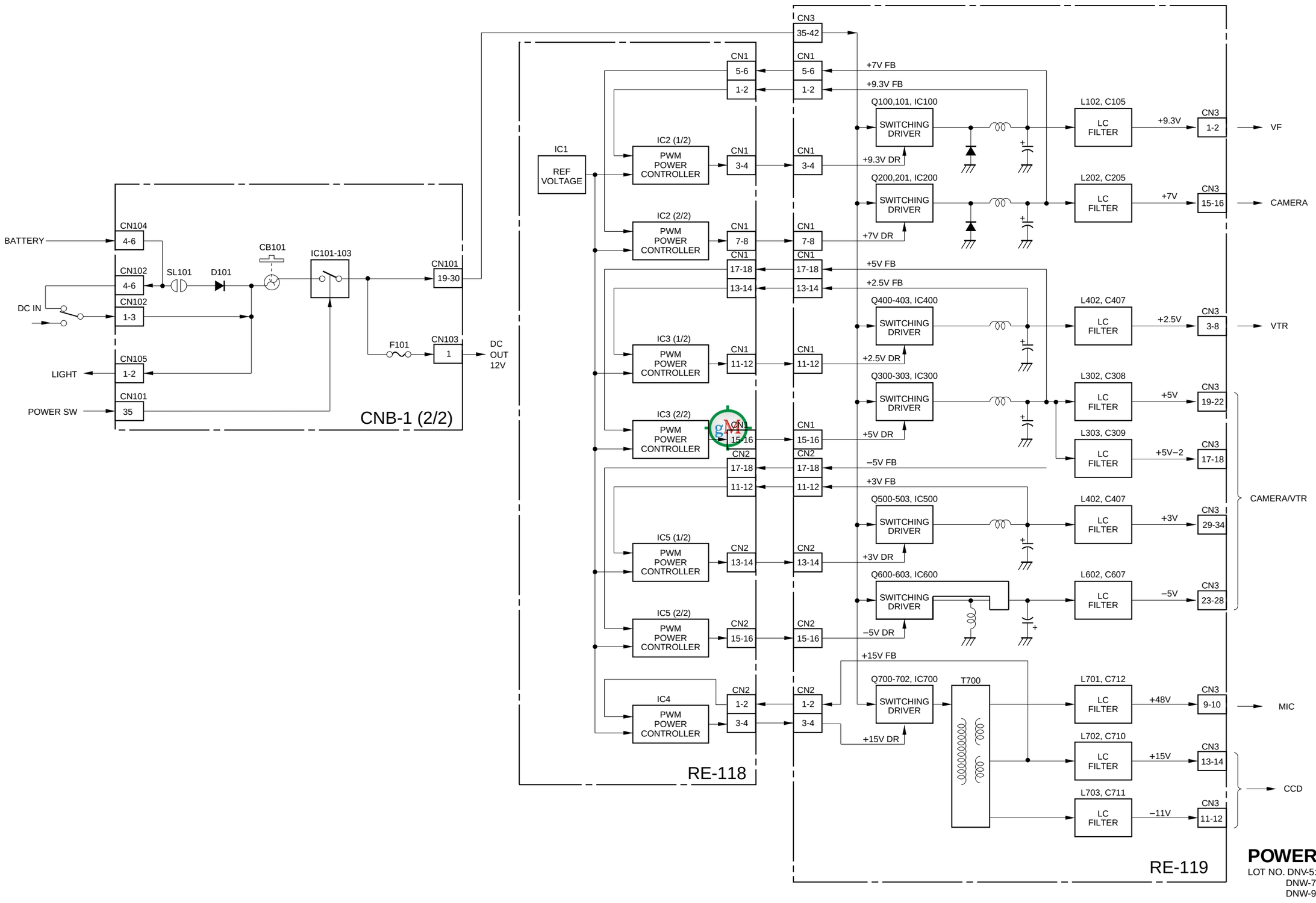

POWER BLOCK

LOT NO. DNV-5: 605-
DNW-7: 604-
DNW-90/90WS: 607-

DNW-7/90/90WS (SY) : S/N 10001 and Higher
DNW-7/90/90WS (J) : S/N 30001 and Higher
DNW-7P/90P/90WSP (SY) : S/N 40001 and Higher

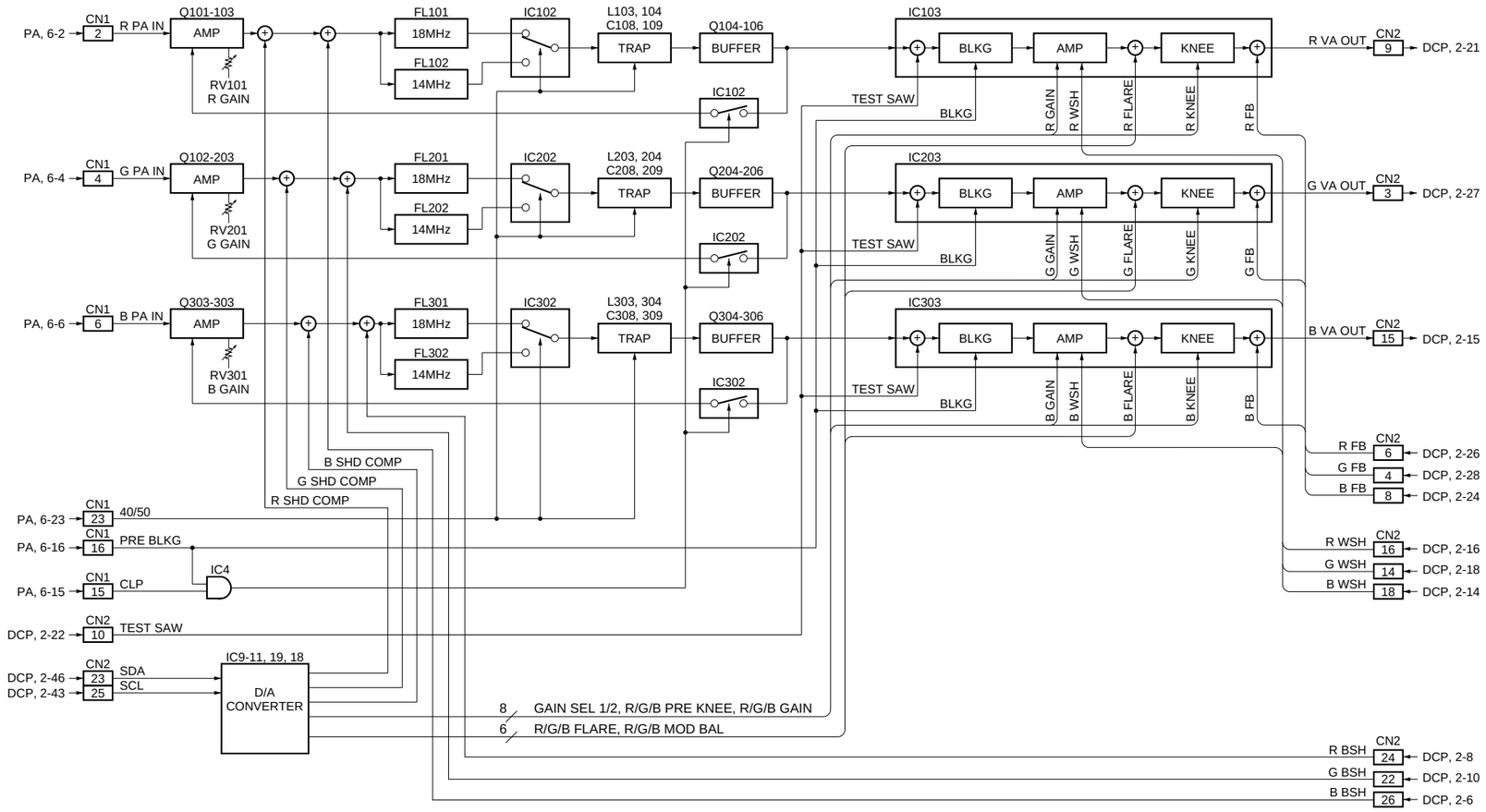

VA-167

CCD BLOCK (1/2)

LOT NO. DNW-7: 604-
DNW-90: 607-

DNW-7/90/90WS (SY) : S/N 10001 and Higher
DNW-7/90/90WS (J) : S/N 30001 and Higher
DNW-7P/90P/90WSP (SY) : S/N 40001 and Higher

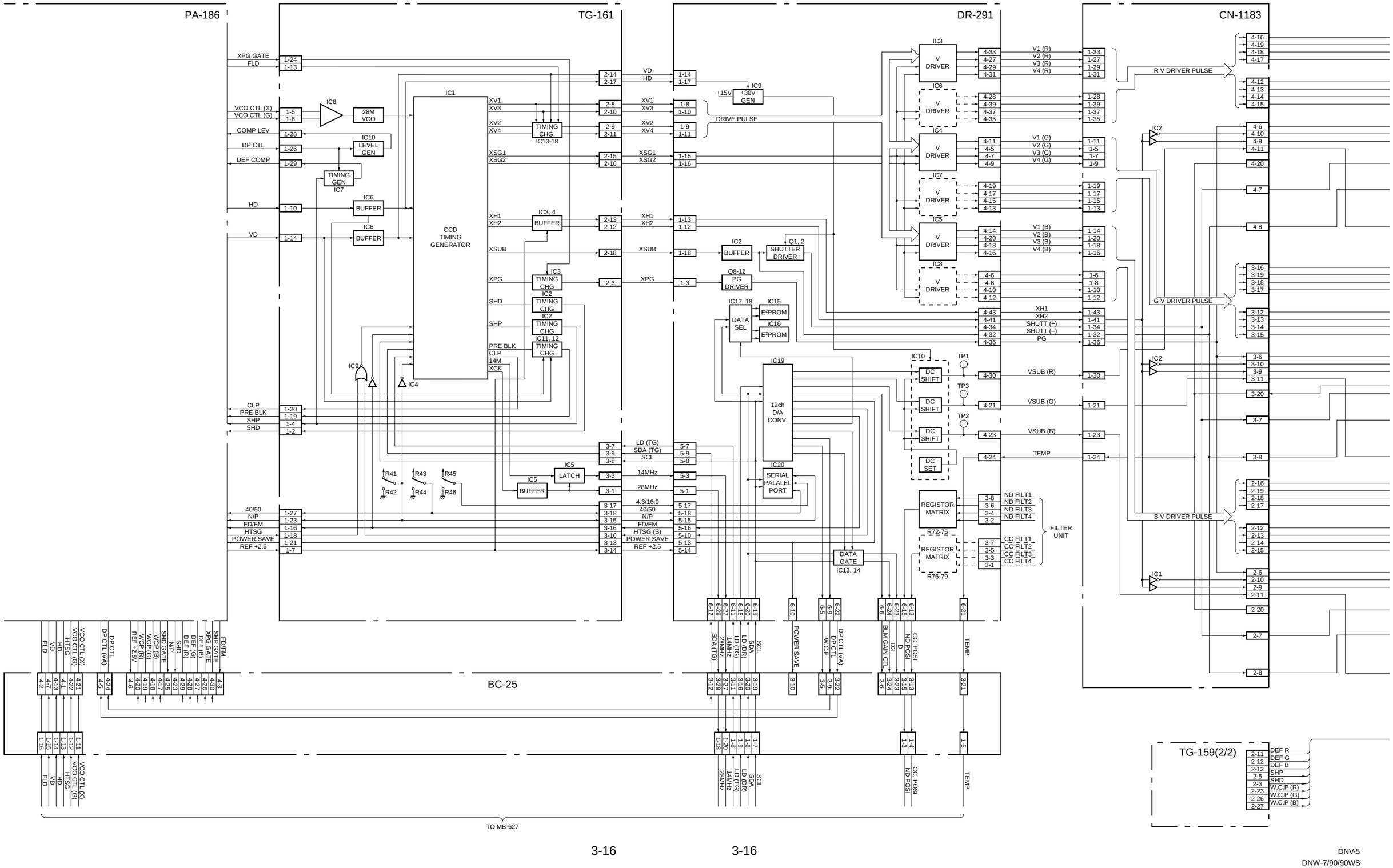

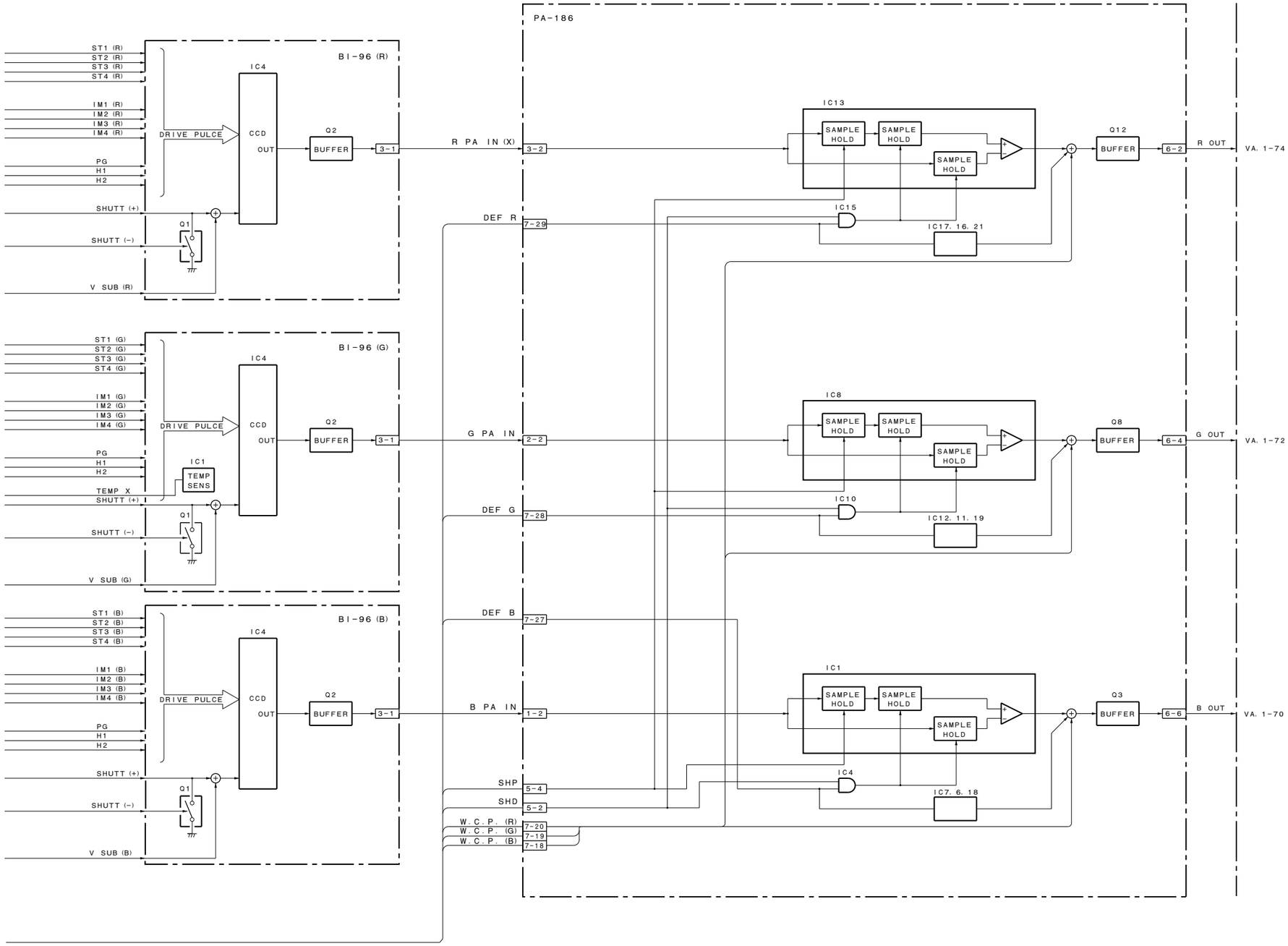

CCD BLOCK (2/2)

LOT NO. 604-

http://getMANUAL.com

Section 4
Board Layouts

4-1

System Configuration	Board Name	Function Name	Page of Block Diagram	Page of Board Layout	Page of Schematic Diagram
CCD BLOCK	BI-96※W	CCD Imager (R, G, B)	3-16	4-29	5-119
	CN-1183※W	Connector Board for BI-96	3-16	4-29	5-118
	DR-291※W	CCD Driver	3-16	4-30	5-120
	PA-186※W	Pre-amp (Sample & Hold)	3-16	4-30	5-122
	TG-161※W7	Timing Generator	3-16	4-31	5-126
	TG-164※W90	Timing Generator	3-16		5-128
	VA-167※W	Video Amp	3-15	4-31	5-124
CAMERA/VIDEO	CN-1193※SD	Connector Board for DCP-1	3-8	4-5	5-19
	CT-187※V5	Camera Adaptor Control, 6P-remote Control, Setting Menu	3-12	4-4	5-4
	DCP-1※W	Camera Processor	3-8	4-7	5-6
	DVP-1	RF, Digital Audio Processor, Timing Clock Generator, System Controller for VTR Block	3-7	4-9	5-20
	DVP-2	Digital Bit Reduction Decoder, Digital Encoder, Digital Decoder	3-7	4-10	5-34
	ES-11※W	Composite Encoder	–	4-15	5-46
	IF-634※V5	50-pin Interface, Video Input/Output	3-12	4-13	5-50
	PA-203※V5	Audio Pre-amp for 50-pin	3-4	4-20	5-59
	RC-61※WS	Rate (16:9 to 4:3) Converter	3-8		5-60
	TC-80	Analog Audio Processor, Time Code Generator	3-10	4-16	5-62※V5 5-72※W
DRUM/SERVO	HN-224	Harness, TC Amp	3-4	4-20	5-81
	MDC-5	Servo Controller	3-13	4-18	5-82
	MDR-1	Drum Motor Driver	3-4	4-20	5-86
MICROPHONE	AIF-8※W	Lens Control, Mic Amp	3-4	4-21	5-87
	MA-68※W	Camera Mic Pre-amp	–	4-21	5-88
	SW-789※W	Mic Level, Auto White/Black SW, VTR Start/Stop SW, Shutter On/Off Select SW	3-4	4-21	5-134
POWER SUPPLY	DC-87	Battery DC Filter	–	4-22	5-89
	PS-390	Power Supply (Light)	3-4	4-22	5-89
	RE-118	Regulator, Switching Control	3-14	4-23	5-90※V5 5-92※W
	RE-119	Regulator	3-14	4-23	5-94※V5 5-96※W
CONNECTOR BOX	AL-40	Audio CH-2 Line Out Amp	–	4-24	5-98
	AXM-14	Connector (AUDIO IN/OUT), Audio Pre-amp	3-4	4-24	5-99
	CNB-1	Circuit Breaker, Audio CH-1 Line Out Amp	3-4	4-24	5-100※V5 5-104※W
	CO-22	Connector (VBS OUT)	3-4	4-25	5-131, 135
	CT-185※V5	Power Supply for 50-pin	3-6	4-24	5-98
	DC-88	External DC Filter	–		5-131, 135
	IO-117	Connector (GEN LOCK IN, TEST OUT, TC IN, TC OUT)	3-4	4-25	5-107

System Configuration	Board Name	Function Name	Page of Block Diagram	Page of Board Layout	Page of Schematic Diagram
OTHERS	CI-12	40-pin Adaptor Interface	3-4	4-25	5-108
	HP-70	Earphone	3-4	4-25	5-131, 135
	KY-293	Function Key	–	4-26	5-130, 134
	LP-86※W	Back Tally, Back Tally Switch	–	4-26	5-135
	LP-102※V5	Back Tally, Back Tally Switch	–	4-26	5-131
	PSW-33※W	Power Switch	3-4	4-26	5-134
	PSW-55※V5	Power Switch	3-6	4-26	5-130
	RX-26	Audio Pre-amp for Wireless Microphone	3-4	4-26	5-109
	SW-780※W	Switch Panel	3-4	4-26	5-109
	SW-808※W	Rotary Encoder Switch	3-4	4-27	5-134
	SW-823※W	Menu and Light Auto/Manual Switch	3-4	4-27	5-135
	SW-873※V5	Menu and Light Auto/Manual Switch	–	4-27	5-130
	SW-882※V5	Rotary Encoder Switch	–	4-27	5-130
	MB-627	Mother Board	–	4-28	5-110※V5 5-114※W

※SD : For DNW-7/7P/90/90P only
※V5 : For DNV-5 only
※W : For DNW-7/7P/90/90P/90WS/90WSP only
※W7 : For DNW-7/7P only
※W90 : For DNW-90/90P/90WS/90WSP only
※WS : For DNW-90WS/90WSP only

4-2

DNW-7/7P/90/90P/90WS/90WSP

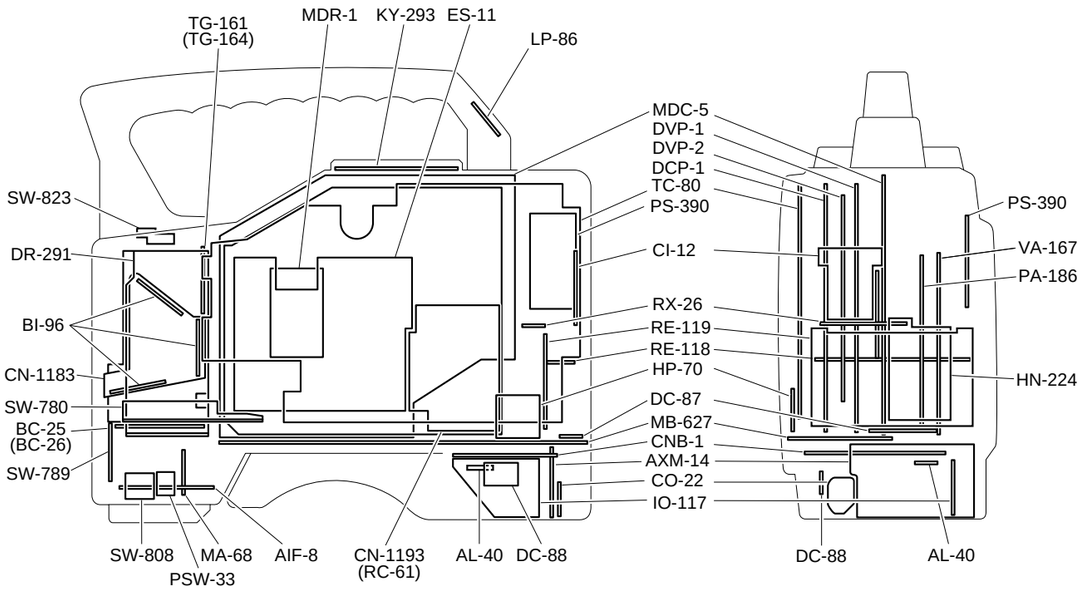

DNV-5

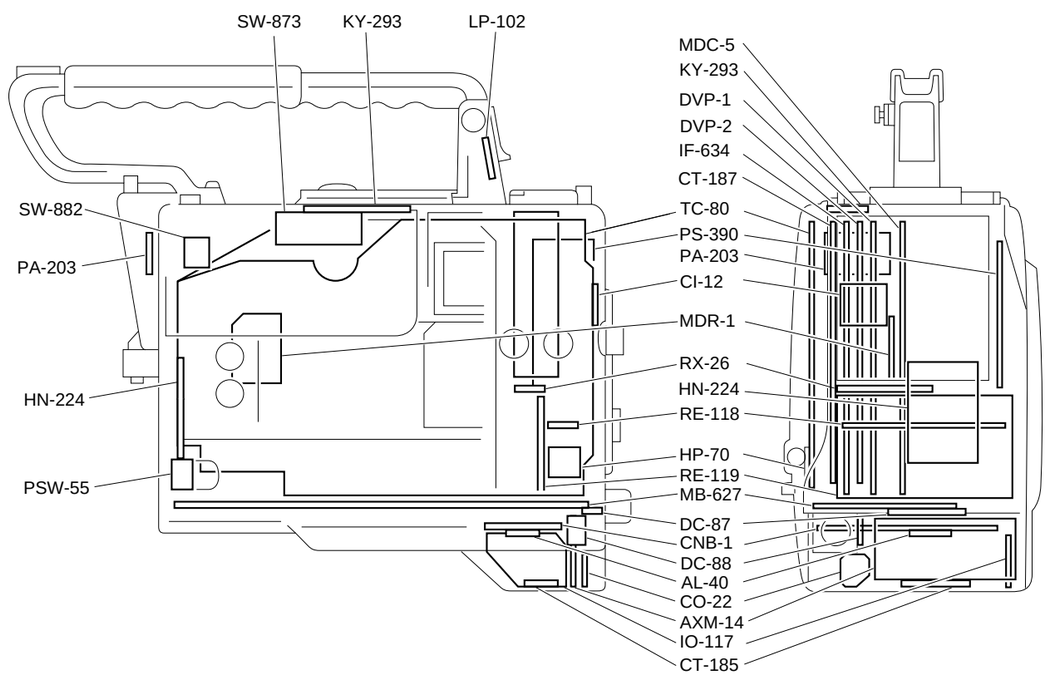

CT-187 (1-662-333-12)
---
* : B SIDE

C1	C2	L1	C2
C2	C2		
C3	C2	Q1	* C2
C4	* C2	Q2	* B4
C5	C1	Q3	* B6
C6	* C3		
C7	C1	R1	C3
C8	* C2	R2	C1
C9	* A1	R3	C1
C10	A1	R4	C1
C11	* B1	R5	C1
C12	A2	R6	B3
C13	B1	R7	B3
C14	A2	R8	C2
C15	A2	R9	C2
C16	A2	R10	* C2
C17	* B1	R11	C2
C18	* B1	R13	* C2
C19	A1	R14	* B1
C20	* C2	R15	A2
C21	B2	R16	A2
C22	* C1	R17	* B2
C23	C1	R18	* B2
C24	C1	R19	* B2
C25	C1	R21	* C1
C26	* B2	R22	* A5
C27	* B2	R23	* C3
C28	* B2	R24	* C3
C29	* B2	R25	B3
C30	B3	R26	B3
C31	A3	R27	* B4
C32	A2	R28	* B4
C33	* A3	R29	* B4
C34	* A4	R30	* B5
C35	A3	R31	* B5
C36	* A4	R32	* B4
C37	A3	R33	* B4
C38	A4	R34	* B5
C39	* C4	R35	* B5
C40	* A5	R36	C4
C41	C6	R37	C4
C42	* C6	R38	* B3
C43	* C5	R39	* B6
C44	B3	R40	* B5
C45	* B6	R41	* B6
C46	A2	R42	* B5
C47	A1	R43	* B6
C48	* B1	R44	* B6
C49	* C5	R45	A1
C50	C6	R46	* B1
C51	A1	R47	* C6
CN1	* C3	R48	B1
		R49	* B5
D1	C1	R50	* B5
D2	C1	R51	C1
D3	* B1	R52	C1
D4	A1	R53	* B4
D10	A1	R54	* B4
		R55	A1
IC1	* C3	RB1	C3
IC2	C2	RB2	C2
IC3	* C1	RB3	C2
IC5	* A2	RB4	* B1
IC6	B2	RB5	* B1
IC7	* B2	RB6	* C2
IC8	* A2	RB7	* A6
IC9	* B2	RB8	* A6
IC10	* A2	RB9	* C4
IC11	C6	RB10	* C4
IC12	* B2	RB12	C4
IC14	* A3	RB13	C3
IC15	* A4		
IC16	* A5	S1	C1
IC17	C5	S2	C2
IC18	A5	S3	B4
IC19	* C6		
IC20	C5	X1	A2
IC21	* B4	X2	B1
IC22	C5		
IC23	C3		
IC24	C4		
IC25	B3		
IC26	* B6		
IC27	A2		
IC28	C3		
IC30	A2		

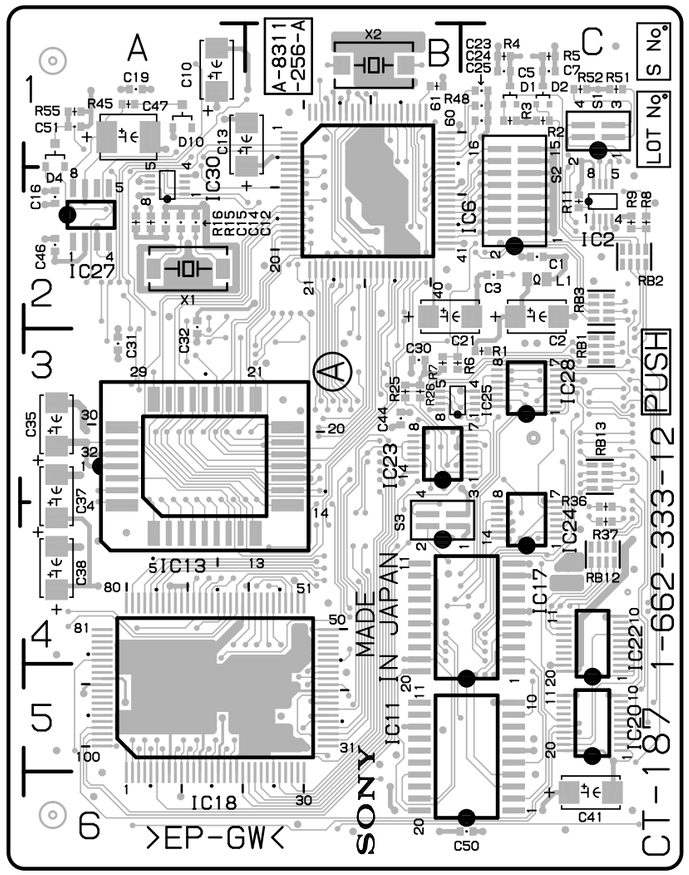

DNV-5(SY):S/N 10001 and Higher
DNV-5(J):S/N 30001 and Higher

CT-187 -A SIDE-
1-662-333-12

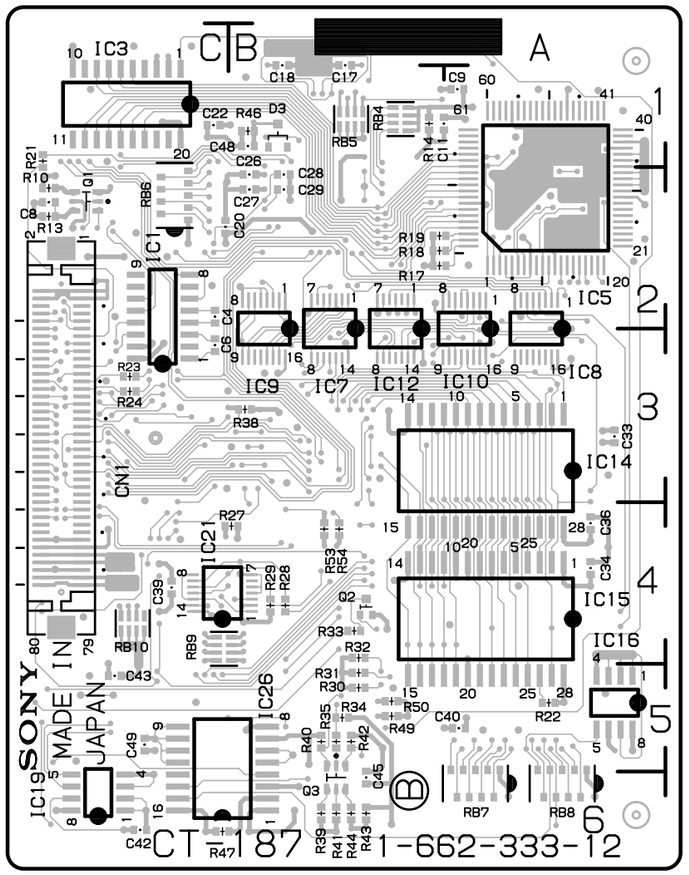

CT-187 -B SIDE-
1-662-333-12

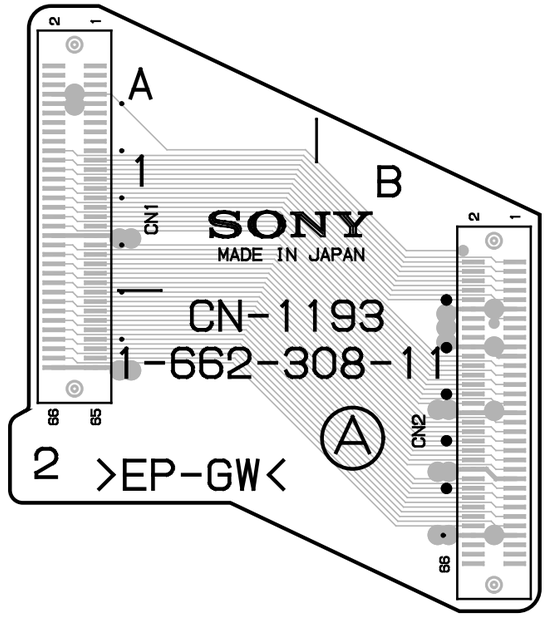

DNW-7/90(SY):S/N 10001 and Higher
DNW-7/90(J):S/N 30001 and Higher
DNW-7P/90P(SY):S/N 40001 and Higher

CN-1193 -A SIDE-
1-662-308-11

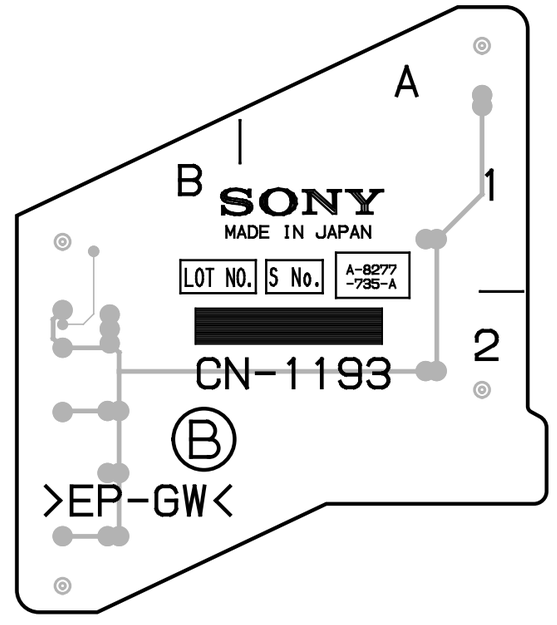

CN-1193 -B SIDE-
1-662-308-11

DCP-1 (1-662-307-13)
---
* : B SIDE

C1	* D1	C102	* E5	C238	* D4	C463	A5	IC28	* F3	L14	F6	R29	* C3	R131	* F5
C2	* E1	C103	* E5	C239	* D5	C464	* C2	IC29	E2	L15	* E6	R30	C2	R132	* F4
C3	* E1	C104	* F4	C240	* D5	C465	A6	IC30	E3	L16	E6	R31	D1	R133	* F4
C4	* E2	C105	* E4	C241	* D5	C471	* A3	IC33	* D4	L17	* E2	R32	D1	R134	* F4
C5	* E2	C106	* F4	C242	D4	C472	A5	IC34	D4	L18	D6	R33	* D1	R135	* F4
C6	* F1	C107	* F4	C244	D4	C473	* C1	IC35	D4	L19	C2	R34	D1	R136	* F5
C7	* F1	C108	D4	C245	D4	C474	* C1	IC36	* F4	L22	* B6	R35	D1	R138	* F5
C8	* D1	C109	* E3	C246	D4	C475	* C3	IC37	* F3	L23	* B5	R36	D1	R139	* F5
C9	* C2	C110	* D5	C247	* D5	C476	B4	IC38	* E3	L31	* C2	R37	* D1	R140	* F5
C10	* D1	C111	* C2	C248	* D5	C477	B4	IC39	* F4	L34	* C2	R38	* D1	R141	* F5
C11	* D1	C112	* D6	C249	* D5	C478	* C2	IC40	* E4			R39	* D1	R142	* F5
C12	* F2	C113	* D6	C259	* D5	C479	* C2	IC41	* E2	Q1	D1	R40	* D1	R143	* F4
C13	* F2	C114	* E6	C292	* E2	C480	* B2	IC42	E4	Q2	* D1	R41	* D1	R144	* F5
C14	* F2	C115	* E6	C295	* F5	C481	* A2	IC43	* F4	Q3	* D1	R42	* C3	R145	* F5
C15	* F2	C116	C6	C315	* D4	C482	* B4	IC44	* F5	Q4	D2	R43	* D2	R146	* F5
C16	* F2	C121	* D5	C316	B5	C483	* B4	IC45	* F6	Q5	* E2	R44	* E2	R147	* E5
C17	* F2	C122	* D5	C317	B5	C484	* A3	IC46	* F6	Q6	* E2	R45	* E2	R148	C5
C18	* E2	C123	* D5	C318	B5	C485	* B3	IC47	* E2	Q7	* D2	R46	* E2	R149	* D4
C19	* D1	C124	* D3	C319	C4	C486	* B3	IC49	* E5	Q8	* D1	R47	* E2	R150	D3
C20	* D1	C126	* D1	C320	B5	C487	* B4	IC50	* E4	Q9	* D2	R48	* F2	R152	* D3
C21	* D1	C127	* D1	C321	B6	C488	* A5	IC51	* E5	Q10	D2	R49	* D3	R153	* E3
C22	* F2	C128	* D2	C323	B6	C499	A4	IC52	* E6	Q11	* E2	R50	* D1	R154	* E5
C23	* F2	C129	D1	C324	C5	CL1	* F4	IC53	* E5	Q12	* D2	R51	D2	R155	* E3
C24	* F3	C130	D1	C325	C5	CL2	* F4	IC54	* C6	Q13	E1	R52	D2	R156	* E3
C25	* F3	C131	D1	C326	C5	CL3	* E5	IC55	* D3	Q14	* D2	R53	* D2	R157	* E5
C26	* F3	C132	* D4	C327	* B5	CL14	* D3	IC56	* E6	Q15	D2	R54	D1	R158	* E5
C27	* F2	C133	* C3	C328	* C6	CL15	* D3	IC57	* E5	Q16	* E3	R55	D1	R159	* E5
C28	D2	C134	A5	C329	* B6	CL19	* F2	IC58	* E5	Q17	E1	R56	D1	R160	* B6
C31	* E2	C135	* D3	C330	* C5	CL20	* F2	IC59	* E5	Q18	* D1	R57	* D1	R163	* D4
C32	* E2	C136	* D4	C331	* B5	CL31	* E1	IC60	D5	Q19	D1	R58	* D1	R164	* D4
C33	* D4	C137	* C3	C332	* B6	CN1	D6	IC61	D4	Q20	D3	R59	* D1	R165	D4
C34	* C3	C138	* D3	C333	* B5	CN2	B6	IC62	* E3	Q21	* D1	R60	* D1	R166	D4
C35	* C4	C139	* E2	C334	* B6	CN4	E3	IC63	* E2	Q22	D2	R61	D2	R168	C4
C36	* C4	C140	E1	C335	* B5	CN5	E5	IC64	* E2	Q23	* C4	R62	* C3	R169	C4
C37	C2	C141	* D3	C336	* B5	CN6	F4	IC65	* F1	Q24	* C5	R63	* D2	R170	C4
C38	D4	C142	* E1	C337	B5	CN7	B4	IC66	* F1	Q25	* C5	R64	* E2	R171	* D4
C39	* F2	C143	E1	C338	B5	CN8	D5	IC68	* D5	Q31	C1	R65	* E2	R172	* D4
C40	* E1	C144	* E2	C340	C5	CN9	D2	IC69	* F6	Q32	C1	R66	* E3	R173	* D4
C41	* E1	C145	E1	C341	* B5	CN10	C1	IC70	* D4	Q33	C1	R67	* E3	R175	C5
C42	* E1	C146	* F4	C342	* B5	CP1	F5	IC71	E5	Q34	C1	R68	* F2	R176	C5
C43	* E1	C147	* F6	C343	* C5			IC72	* A4	Q37	C1	R69	* D3	R177	C5
C44	* E1	C148	E4	C344	* C5	D1	* E2	IC73	F6	Q38	C1	R70	* D1	R178	D5
C45	A3	C149	E4	C345	C4	D2	E4	IC75	* E6	Q39	A4	R71	D3	R179	D5
C46	* E1	C152	* E5	C346	* B5	D3	E4	IC76	E6	Q40	C1	R72	* D3	R182	* D4
C47	* E1	C153	* F3	C347	* C5	D4	E4	IC77	E6	Q43	C1	R73	D3	R183	* F3
C48	* E1	C154	* F3	C348	* C5	D5	* D5	IC78	* E6	Q45	B5	R74	* D4	R185	* F3
C49	* E1	C155	* A2	C349	* C5	D6	* D4	IC80	B5	Q46	C6	R75	C5	R187	* F4
C50	* E1	C156	* E6	C350	B6	D7	C5	IC84	B5	Q47	C6	R76	* C3	R188	* F4
C51	* E1	C157	E6	C354	* B5	D8	C5	IC90	C4	Q48	B6	R77	* C4	R190	* E6
C52	* E1	C158	E5	C355	* B6	D9	* D5	IC93	B5	Q50	* B6	R78	* C3	R191	* F3
C53	* E1	C159	* E6	C356	B5	D10	* D5	IC100	B4	Q53	* B5	R79	* D4	R193	* E4
C54	* B2	C160	* E6	C357	B4	D11	E4	IC101	* C5	Q54	* B5	R80	* F5	R194	* D1
C55	* E1	C161	A4	C358	* C4	D12	* F5	IC102	* C4	Q55	* B5	R81	* F5	R195	* D1
C56	E1	C162	A4	C359	C4	D14	* B2	IC103	C5	Q56	* B5	R82	* F5	R196	* D2
C57	A5	C163	* C1	C360	* B5	D39	B6	IC104	* C5	Q59	* B5	R83	* D4	R197	* D1
C58	* F1	C167	* E3	C362	* C5	D40	C6	IC105	* B5	Q60	* B5	R84	* C3	R198	* D1
C59	* F1	C168	* E3	C363	* B5	D41	* B5	IC106	C5	Q61	* B5	R85	* D3	R199	* D2
C60	* F1	C173	* E4	C365	B6	D51	C2	IC107	B5	Q63	* B5	R86	* D4	R200	* E4
C61	E1	C174	* E4	C403	* C2	D55	B4	IC108	B5	Q64	* B5	R88	* B6	R201	* E4
C62	* F1	C175	D4	C404	* C2	D56	B4	IC109	C4	Q65	C5	R89	* F2	R202	* E4
C63	* F1	C177	* D4	C406	B2	D57	* C3	IC122	* C2	Q66	C5	R90	D2	R205	E3
C64	* F1	C178	* D6	C407	C2			IC123	* B2	Q67	B5	R91	C2	R206	* E3
C65	* F1	C180	* C5	C408	C2	E1	D2	IC124	A3	Q68	C4	R92	* D2	R207	* F3
C66	* E1	C181	* D4	C409	* C2	E2	* F5	IC125	* C3	Q69	C4	R93	C2	R208	* F3
C67	E1	C182	C5	C410	* C2			IC126	* B2	Q71	* B4	R94	C2	R209	* F3
C68	* E1	C183	* C4	C411	* D2	FL1	D1	IC128	* B1	Q73	* C4	R95	* E1	R210	* F3
C69	* E1	C184	* C4	C416	* C1	FL2	D1	IC129	* C1	Q75	* B4	R96	* E1	R211	* F3
C70	E1	C185	* D4	C417	* C1	FL3	D1	IC130	* C2	Q91	B2	R97	* E1	R212	* F3
C71	* F2	C187	* F4	C420	* C2	FL4	D1	IC131	* C1	Q332	* B6	R98	* C3	R213	* E6
C72	* F2	C188	C5	C421	* C1	FL5	D1	IC132	A2			R99	E1	R214	* E6
C73	* F1	C189	C5	C423	* C1	FL6	D1	IC133	* C2	R1	D1	R100	E1	R215	* E6
C74	* E1	C190	* C5	C424	* C1			IC134	B2	R2	D1	R101	E1	R216	* E6
C75	E1	C191	* D5	C425	* C1	IC1	* D2	IC135	A4	R3	* D1	R102	E1	R217	* E5
C76	* E1	C193	* F5	C426	* C1	IC2	* F2	IC136	* A2	R4	D1	R103	E1	R218	* E4
C77	E1	C194	* D5	C429	* C1	IC3	C3	IC137	A3	R5	D1	R105	E1	R219	* D5
C78	C2	C195	D5	C430	* C1	IC4	C3	IC138	A4	R6	D1	R106	* D4	R220	* D5
C79	C3	C196	* D5	C431	D6	IC5	* F2	IC139	A4	R7	* D1	R107	* D4	R221	* D5
C80	* F1	C199	* F5	C432	* C1	IC6	D4	IC140	* C2	R8	* D1	R108	E1	R222	* D5
C81	* F1	C200	* F6	C433	A2	IC7	* F3	IC141	A5	R9	* D1	R109	* C3	R223	* D5
C82	* F2	C201	* F6	C434	A2	IC8	E1	IC142	A6	R10	* D1	R110	E1	R224	* D5
C83	C2	C202	* F6	C435	* B2	IC9	* E1	IC143	A5	R11	* D1	R111	E1	R225	* E5
C84	* E1	C203	* F6	C437	B3	IC10	E1	IC144	A5	R12	* D1	R112	* F1	R226	* D5
C85	C2	C204	* F6	C438	B3	IC11	E1	IC145	A6	R13	* D2	R113	E1	R227	* D5
C86	F2	C217	* F5	C439	* B2	IC12	E1	IC146	* C2	R14	* E2	R115	E1	R228	* D5
C87	* C3	C219	* F5	C440	* B2	IC13	D3	IC147	* A5	R15	* E2	R116	E1	R229	* D5
C88	* C3	C221	* F5	C441	* A3	IC14	* E1	IC148	* A6	R16	* E2	R117	E1	R230	* D5
C89	* E1	C222	* E5	C443	* B3	IC15	* F1	IC149	* C2	R17	* E2	R118	E1	R231	* D5
C90	* E3	C228	* E6	C444	* B3	IC16	* F2	IC150	* C2	R18	* E1	R119	* F1	R232	* D5
C91	* E3	C229	* E6	C445	* B3	IC17	E2	IC152	* A3	R19	* E2	R121	E2	R233	* D5
C93	* C3	C230	* E6	C446	* B3	IC18	D3	IS1	A3	R20	* E2	R122	E1	R234	* D5
C94	* E3	C231	* E5	C447	* B3	IC19	* E4			R21	* E2	R123	E1	R235	D4
C95	* F5	C232	* E5	C448	* B3	IC20	C4	L4	* C5	R22	* E2	R124	E1	R236	D4
C96	* F5	C233	* E5	C449	* B3	IC21	C3	L7	* D5	R23	* D1	R125	* F1	R237	D4
C97	* E3	C234	* E5	C450	* B3	IC22	D4	L9	* D4	R24	* D1	R127	* F4	R238	E4
C98	* F5	C235	* D4	C451	* A2	IC23	* C3	L11	D6	R25	* D2	R128	D3	R239	* D5
C99	* F5	C236	* D5	C453	* B3	IC24	D3	L12	D6	R26	* D2	R129	* F5	R240	* D5
C100	* F5	C237	* D5	C462	C3	IC25	* E5	L13	D5	R27	* A4	R130	* F4	R241	* D5

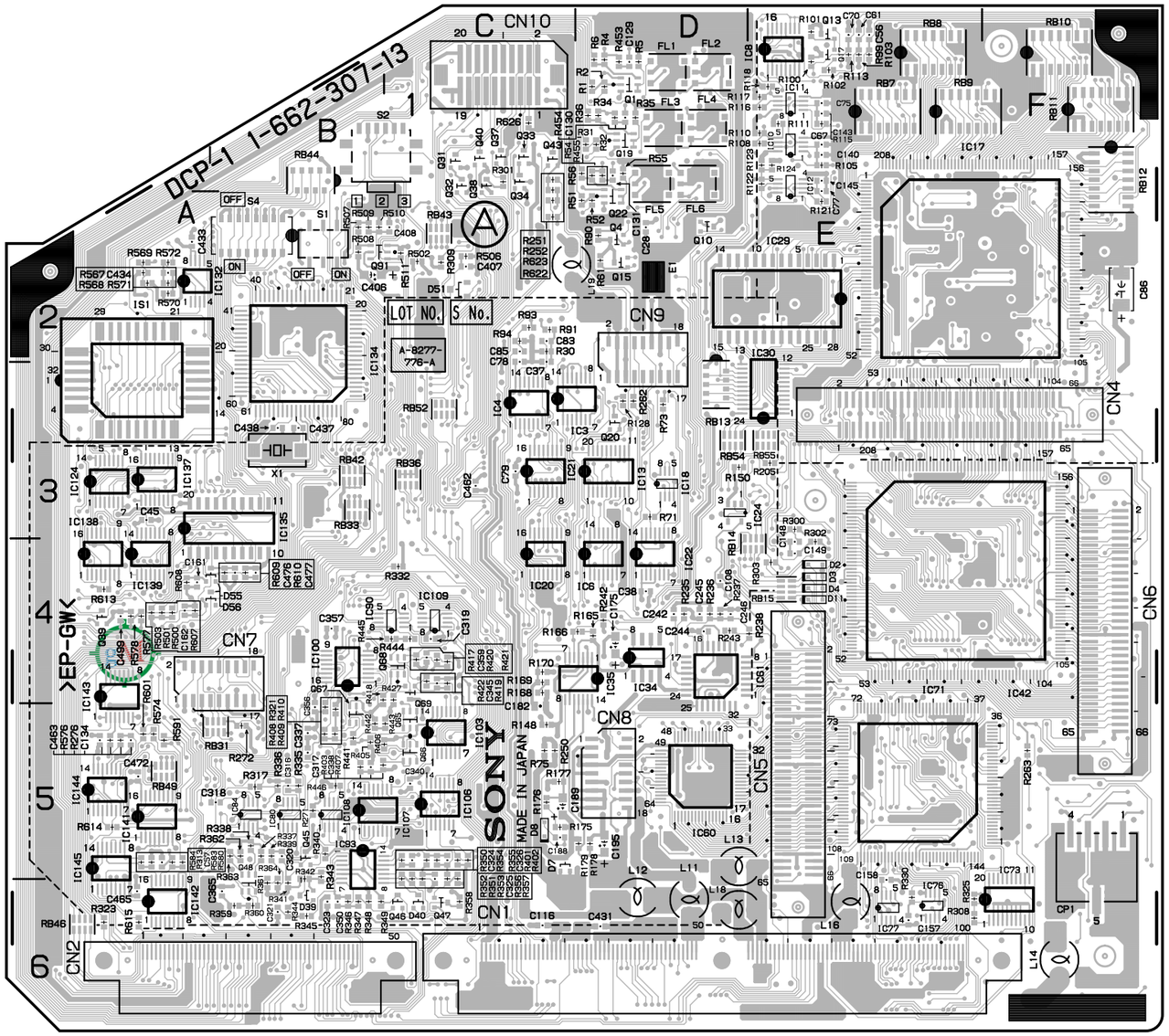

DNW-7/90/90WS(SY):S/N 10001 and Higher
DNW-7/90/90WS(J):S/N 30001 and Higher
DNW-7P/90P/90WSP(SY):S/N 40001 and Higher

DCP-1 -A SIDE-
1-662-307-13

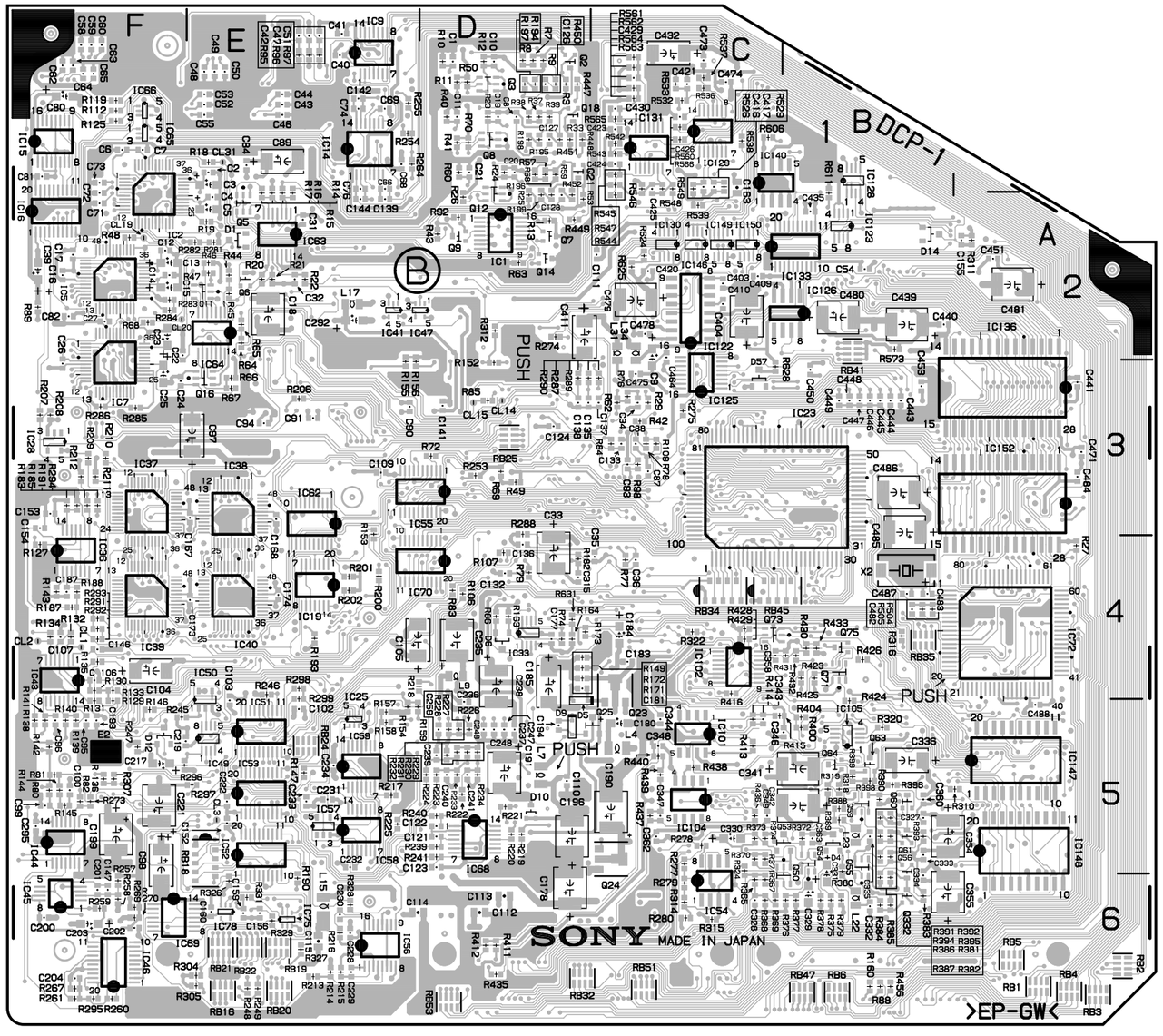

DCP-1 -B SIDE-
1-662-307-13

R242	D4	R347	B6	R447	* D1	RB22	* E6
R243	D4	R348	B6	R448	* D1	RB24	* E5
R245	* F5	R349	B6	R449	* D2	RB25	* D3
R246	* E4	R350	C5	R450	* D1	RB31	B5
R247	* F5	R351	C5	R451	* D1	RB32	* D6
R248	* E6	R352	C5	R452	* D2	RB33	B3
R249	* E6	R353	C5	R453	D1	RB34	* C4
R250	C5	R354	C5	R454	D1	RB35	* B4
R251	C1	R355	C5	R455	D1	RB36	C3
R252	C1	R356	C5	R456	* B6	RB41	* B2
R253	* D3	R357	C5	R500	A4	RB42	B3
R254	* E1	R358	C6	R501	A4	RB43	C2
R255	* E1	R359	B6	R502	C2	RB44	B1
R257	* F6	R360	B6	R503	A4	RB45	* C4
R258	* F6	R361	B6	R504	* B4	RB46	A6
R259	* F6	R362	B5	R505	* B4	RB47	* B6
R260	* F6	R363	B5	R506	C2	RB49	A5
R261	* F6	R364	B6	R507	B2	RB51	* C6
R262	D3	R365	* C6	R508	B2	RB52	C3
R263	F5	R367	* C6	R509	B2	RB53	* D6
R264	* E1	R368	* C6	R510	B2	RB54	D3
R267	* F6	R369	* C6	R511	C2	RB55	E3
R269	* F6	R370	* C5	R526	* C1		
R270	* F6	R371	* C5	R529	* C1	S1	B2
R271	B5	R372	* B5	R532	* C1	S2	B1
R272	B5	R373	* C5	R533	* C1	S4	B2
R273	* F5	R374	* C5	R536	* C1		
R274	* D2	R375	* B6	R537	* C1	X1	B3
R275	* C3	R376	* B6	R538	* C1	X2	* B4
R276	A5	R377	* B6	R539	* C2		
R277	* C5	R378	* B6	R542	* C1		
R278	* C5	R379	* B6	R543	* C1		
R279	* C6	R380	* B5	R544	* C2		
R280	* C6	R381	* B5	R545	* C1		
R281	* E2	R382	* B6	R546	* C1		
R282	* E2	R383	* B6	R547	* C1		
R283	* F2	R384	* B6	R548	* C1		
R284	* F2	R385	* B6	R549	* C1		
R285	* F3	R386	* B5	R560	* C1		
R286	* F3	R387	* B6	R561	* C1		
R287	* D3	R388	* B5	R562	* C1		
R288	* D3	R389	* B5	R563	* C1		
R289	* C3	R390	* B5	R564	* C1		
R290	* D3	R391	* B5	R565	* C1		
R291	* F4	R392	* B5	R566	* C1		
R292	* F4	R393	* B5	R567	A2		
R293	* F4	R394	* B5	R568	A2		
R294	* F3	R395	* B5	R569	A2		
R295	* F6	R396	* B5	R570	A2		
R296	* F5	R398	* B5	R571	A2		
R297	* E5	R399	* B5	R572	A2		
R298	* E4	R400	* B5	R573	* B2		
R299	* E4	R401	C5	R574	A5		
R300	E3	R402	C5	R576	A5		
R301	C1	R403	B5	R577	A4		
R302	E4	R404	* B5	R578	A4		
R303	E4	R405	B5	R580	A5		
R304	* E6	R406	C5	R583	A5		
R305	* E6	R407	C5	R584	A5		
R307	* F5	R408	B5	R591	A5		
R308	E6	R409	B5	R601	A5		
R309	C2	R410	B5	R606	* C1		
R310	* B5	R411	* D6	R607	A4		
R311	* A2	R412	* D6	R608	A4		
R312	* D2	R413	* C5	R609	B4		
R313	A5	R414	* C5	R610	B4		
R314	* C6	R415	* C5	R611	* B2		
R315	* C6	R416	* C4	R613	A4		
R316	* B4	R417	C4	R614	A5		
R317	B5	R418	C4	R615	A6		
R318	* B5	R419	C4	R622	C2		
R319	* B5	R420	C4	R623	C2		
R320	* B5	R421	C4	R624	* C2		
R321	B5	R422	C4	R625	* C2		
R322	* C4	R423	* B4	R626	C1		
R323	A6	R424	* B5	R628	* C3		
R324	* C5	R425	* B4	R631	* D4		
R325	E6	R426	* B4	RB1	* A6		
R326	* E6	R427	C4	RB2	* A6		
R327	* E6	R428	* C4	RB3	* A6		
R328	* E6	R429	* C4	RB4	* A6		
R329	* E6	R430	* B4	RB5	* A6		
R330	E6	R431	* B4	RB6	* B6		
R331	* E6	R432	* B4	RB7	E1		
R332	C4	R433	* B4	RB8	E1		
R335	B5	R435	* D6	RB9	E1		
R336	B5	R436	* C5	RB10	F1		
R337	B5	R437	* C5	RB11	F1		
R338	B5	R438	* C5	RB12	F1		
R339	B5	R439	* C5	RB13	D3		
R340	B5	R440	* C5	RB14	E4		
R341	B6	R441	B5	RB15	E4		
R342	B5	R442	B5	RB16	* E6		
R343	B5	R443	C5	RB18	* E5		
R344	B6	R444	C4	RB19	* E6		
R345	B6	R445	C4	RB20	* E6		
R346	B6	R446	B5	RB21	* E6		

DVP-1 (1-662-305-13)
---
* : B SIDE

C1	*D1	C337	B4	C524	*D4	C720	*A2	C1005	*C6	IC5	E2	IC1007	D6	Q1009	*F6
C2	*D1	C338	*B4	C525	*D4	C721	*A3	C1006	*D6	IC6	E2	IC1008	*E5	Q1010	*E6
C3	*E1	C339	*B3	C526	*D4	C722	*B2	C1007	*A3	IC7	D1	IC1009	*E5	Q1011	*D5
C4	*D1	C340	*B4	C527	*C4	C724	*B2	C1008	A3	IC8	E2	IC1030	*C6	Q1012	*D6
C5	D1	C341	B5	C528	*C4	C725	*B2	C1009	A3	IC9	D1			Q1013	D5
C6	F1	C342	B5	C529	*C4	C726	*A2	C1010	A3	IC10	E2	L1	*C1	Q1014	*D5
C7	D1	C343	*E3	C530	*C4	C727	*A2	C1011	*A4	IC11	D2	L2	*D1	Q1015	*C6
C8	D1	C344	*B3	C531	C4	C728	*B2	C1012	*E6	IC12	D1	L3	G2	Q1016	*D6
C9	E2	C345	*B3	C532	*C4	C729	*B2	C1013	*F6	IC13	D1	L4	F3	Q1030	*C6
C10	E2	C346	B5	C533	*C4	C730	*A2	C1014	A4	IC14	D2	L5	*D2	Q1031	*C6
C11	E3	C347	B5	C534	*C4	C731	*A2	C1015	*E6	IC15	D2	L10	F1		
C12	E3	C348	*B4	C535	D4	C732	*B2	C1016	*F6	IC16	*B2	L201	*A3	R1	*F3
C13	*C2	C349	B4	C536	*D4	C734	*A4	C1017	*E6	IC17	F2	L202	*A3	R2	*F3
C14	E2	C350	B3	C537	D4	C735	*C3	C1018	*E6	IC18	*F2	L203	B6	R3	*E3
C15	G2	C351	B3	C538	*C4	C736	B2	C1019	*E6	IC19	D1	L204	A5	R4	*E3
C16	G2	C352	*B4	C539	*D3	C737	*B2	C1020	D6	IC20	F2	L205	A5	R5	*E1
C17	F2	C353	B3	C540	*D4	C738	B2	C1021	D6	IC21	D2	L207	A6	R6	*D1
C18	F3	C354	B4	C541	D5	C739	*A2	C1022	*E5	IC22	F2	L210	A5	R7	F1
C19	F2	C355	*B3	C542	C5	C740	B3	C1023	C6	IC23	*F1	L213	A5	R8	*D1
C20	*D2	C356	*B6	C543	D3	C741	*A3	C1024	D6	IC24	*F1	L301	B4	R9	*D1
C21	*E1	C400	B4	C544	*C3	C742	B3	C1025	C6	IC25	D1	L302	*B5	R10	E1
C22	*G1	C401	B5	C545	*C3	C743	*B3	C1026	C6	IC26	*E1	L303	*B5	R11	*F3
C23	*F1	C402	B5	C546	D5	C744	B2	C1027	E5	IC27	E1	L401	B4	R13	*D1
C25	F1	C403	*B5	C547	D5	C745	B2	C1028	*F5	IC28	E2	L402	*B5	R14	*A6
C26	*E1	C404	*B5	C548	*C4	C746	A2	C1030	*C6	IC29	E1	L403	*C5	R15	*F3
C27	F1	C405	*C5	C549	C4	C747	A2	C1031	*C6	IC30	E1	L501	C4	R16	*D2
C28	*D2	C406	*C4	C550	C3	C748	A2	C1032	C6	IC103	*D1	L502	*C5	R17	*D2
C29	E3	C407	*B5	C551	*D3	C749	A3	C1033	C6	IC200	A4	L503	*D5	R18	*E1
C30	*D2	C408	*C5	C552	*D4	C750	B2	CL1	B6	IC201	A3	L601	D4	R19	*E3
C201	*A4	C409	*C5	C553	D3	C751	B3	CL2	B6	IC202	A3	L602	*D5	R20	*E3
C202	*A3	C410	*C5	C554	C4	C752	*C2	CL5	D6	IC210	A4	L603	*D5	R21	*D3
C203	A5	C411	*C5	C600	D4	C753	C1	CL6	B6	IC211	A4	L701	*B2	R22	*E1
C204	A5	C412	*C5	C601	D5	C754	*C2	CL801	*G5	IC212	*A5	L801	*G5	R23	*E3
C205	A5	C413	*C5	C602	D5	C801	G6	CL802	*F5	IC214	*A4	L802	E4	R24	*E3
C210	*A5	C414	*C4	C603	*D5	C802	G6	CL803	*F5	IC300	B3	L803	*F5	R25	*D3
C211	*A5	C415	*B5	C604	*D5	C803	*G5	CL804	*F5	IC301	E3	L901	F3	R26	*D3
C212	*A4	C416	*C5	C605	*E5	C804	*G5	CL805	*F5	IC302	*B4	L1001	*D6	R27	*E3
C213	*A5	C417	*C5	C606	*E4	C805	G5	CL806	*F4	IC303	B3	L1002	*D6	R28	*E3
C214	A3	C418	C4	C607	*D5	C806	G5	CL807	*F4	IC304	A4	L1003	*E6	R29	*D3
C215	A3	C419	*B4	C608	*E5	C807	*G5	CL808	*F4	IC305	*B4	L1004	*E6	R30	E1
C216	A5	C420	C4	C609	*D5	C808	*G5	CL809	*F5	IC306	*B6	L1005	*E6	R31	*E3
C217	A5	C421	*C4	C610	*D5	C809	*G5	CL810	*F5	IC400	B3	L1006	D6	R32	*E3
C220	*A4	C422	*C4	C611	*E5	C810	*G5	CL811	*F5	IC402	*C4	L1007	D6	R33	*D2
C222	B6	C423	C4	C612	*D5	C811	*G4	CL812	*F5	IC403	C3			R34	*D2
C223	A6	C424	*C4	C613	*E5	C812	G5	CL813	*F5	IC404	B4	Q10	A6	R35	E1
C224	A6	C425	*C4	C614	*E4	C813	G5	CL814	*F5	IC405	*C4	Q11	A6	R36	*E3
C226	*A6	C426	*C4	C615	*D5	C814	G4	CL815	*F5	IC500	C3	Q12	*A6	R37	*E3
C227	A5	C427	*C4	C616	*D5	C815	G4	CL816	*F5	IC502	*C4	Q13	*A6	R38	*E1
C228	A5	C428	*C4	C617	*D5	C816	*F5	CL819	B6	IC503	D3	Q14	*A6	R39	*F3
C229	*A4	C429	*B4	C618	E4	C817	*F5	CN3	B6	IC504	C4	Q15	*A6	R40	*F3
C230	A5	C430	*C4	C619	*D4	C818	*F5	CN4	E6	IC505	*C4	Q16	A6	R41	*E3
C231	A6	C431	B4	C620	D4	C819	F5	CN10	E4	IC600	D3	Q201	*A6	R42	*F3
C232	*A5	C432	*B4	C621	*E4	C820	*G4	CN11	E1	IC602	*D4	Q202	*B6	R43	*F3
C233	*E5	C433	*B4	C622	*E4	C821	*F4	CN12	D1	IC603	D3	Q260	*B6	R44	*E3
C234	A5	C434	*B4	C623	D4	C822	*F4	CN13	*C1	IC604	D4	Q261	*B6	R45	E2
C235	A5	C435	C4	C624	*E4	C823	*F4	CNI1	*E2	IC605	*D4	Q262	*B6	R46	E2
C260	*B6	C436	*C4	C625	*D4	C824	*F5	CP801	*F5	IC700	A4	Q263	*B6	R47	*F3
C261	*B6	C437	C4	C626	*D4	C825	*F4			IC701	C2	Q301	B5	R48	*F3
C262	*B6	C438	*C4	C627	*D4	C826	*F5	D1	*E1	IC702	*C2	Q302	B5	R49	*E1
C263	B6	C439	*C3	C628	*D4	C827	*E4	D2	F1	IC703	*C2	Q303	B5	R50	E2
C300	A4	C440	*C4	C629	*D4	C828	*F6	D3	F1	IC704	*C2	Q304	B5	R51	*D1
C301	B5	C441	C5	C630	*D4	C829	*F6	D10	A6	IC705	*C2	Q305	*B5	R52	*D2
C302	A5	C442	B5	C631	D4	C830	*G5	D11	A6	IC706	*C2	Q306	*B5	R53	*E3
C303	*B5	C444	*C3	C632	*D4	C831	*F5	D12	A6	IC707	B2	Q307	B4	R54	E2
C304	*B5	C445	*C3	C633	*D4	C832	*G6	D13	G1	IC708	A2	Q308	A4	R55	*D1
C305	*B5	C446	C5	C634	*D4	C833	G6	D310	*A6	IC709	A3	Q310	*A6	R56	*D2
C306	*B4	C447	C5	C635	D4	C834	*F5	D701	*B2	IC710	B3	Q401	C5	R57	*E3
C307	*B5	C448	*C4	C636	*E4	C835	*F5	D702	*A2	IC711	C1	Q402	C5	R58	G3
C308	*B5	C449	B4	C637	D4	C836	F5	D703	*A3	IC801	G5	Q403	C5	R59	F3
C309	*B5	C452	*C4	C638	*D4	C837	F5	D704	*B3	IC802	G5	Q404	C5	R60	G3
C310	*B5	C453	C3	C639	*D3	C838	*G6	D901	*F4	IC803	G5	Q405	*B5	R61	F3
C311	*B5	C454	B4	C640	*E4	C839	G5	DL301	B4	IC804	G5	Q406	*C5	R62	G3
C312	*B5	C455	*C3	C641	D5	C840	G5	DL401	C4	IC805	F4	Q407	C4	R63	F3
C313	*B5	C500	C4	C642	D5	C841	*G5	DL501	D4	IC806	*F4	Q408	B4	R64	G3
C314	*B4	C501	C5	C644	*D3	C901	F4	DL601	D4	IC807	F5	Q501	D5	R65	F3
C315	*A5	C502	C5	C645	*D3	C902	F4			IC808	F5	Q502	D5	R66	G3
C316	*B5	C503	*C5	C646	E5	C903	F4	E1	*B1	IC810	*F5	Q503	C5	R67	*F3
C317	*B5	C504	*C5	C647	E5	C904	F4	E2	F2	IC811	G5	Q504	C5	R68	G3
C318	B4	C505	*D5	C648	*D4	C905	*F4	E301	*B3	IC812	F5	Q505	*C5	R69	*G3
C319	*A4	C506	*D4	C649	D4	C906	*F3	E401	*C3	IC813	F5	Q506	*D5	R70	E2
C320	B4	C507	*C5	C650	*D3	C907	*F3	E501	D3	IC814	*F5	Q507	D4	R71	G2
C321	*B4	C508	*D5	C652	*E4	C908	*F4	E601	*E4	IC815	F5	Q508	C4	R72	*G3
C322	*B4	C509	*D5	C653	*E4	C909	F3	E801	*G4	IC816	*F5	Q601	E5	R73	G2
C323	B4	C510	*C5	C654	D4	C910	F3	E901	*F3	IC817	*G5	Q602	D5	R74	*G3
C324	*B4	C511	*D5	C701	C3	C911	*F4	E902	G4	IC818	*F5	Q603	D5	R75	*G3
C325	*B4	C512	*C5	C702	C3	C912	*F4			IC901	F4	Q604	D5	R76	*G3
C326	*B4	C513	*D5	C703	*B3	C913	G3	F101	A6	IC902	F4	Q605	*D5	R77	*G3
C327	*B4	C514	*D4	C704	B2	C914	G4	FB801	G4	IC903	*F4	Q606	*D5	R78	*G3
C328	*B4	C515	*C5	C705	B1	C915	*F3	FL301	B5	IC904	*F4	Q607	D4	R79	*G3
C329	*B4	C516	*C5	C706	C1	C916	*F4	FL401	C5	IC905	G4	Q608	D4	R80	*G3
C330	*B4	C517	*D5	C707	C1	C917	*F3	FL501	C5	IC906	*G4	Q1001	*D6	R81	*G2
C331	B4	C518	D4	C710	*C2	C918	G3	FL601	D5	IC1001	*E5	Q1002	*D6	R82	*G2
C332	*A4	C519	*C4	C711	*C2	C1000	*E5			IC1002	*D6	Q1003	*A3	R83	*F3
C333	*A4	C520	D4	C712	*B2	C1001	*D6	IC1	*E2	IC1003	*A3	Q1004	*A3	R84	*F3
C334	*A4	C521	*D4	C713	*A2	C1002	*D6	IC2	*E1	IC1004	A4	Q1006	*A4	R85	*F3
C335	B4	C522	*D4	C714	*A3	C1003	*C6	IC3	*E1	IC1005	*E6	Q1007	*F6	R86	*F3
C336	*B4	C523	C4	C715	*B3	C1004	*D6	IC4	*E1	IC1006	*E6	Q1008	*F6	R88	*A6

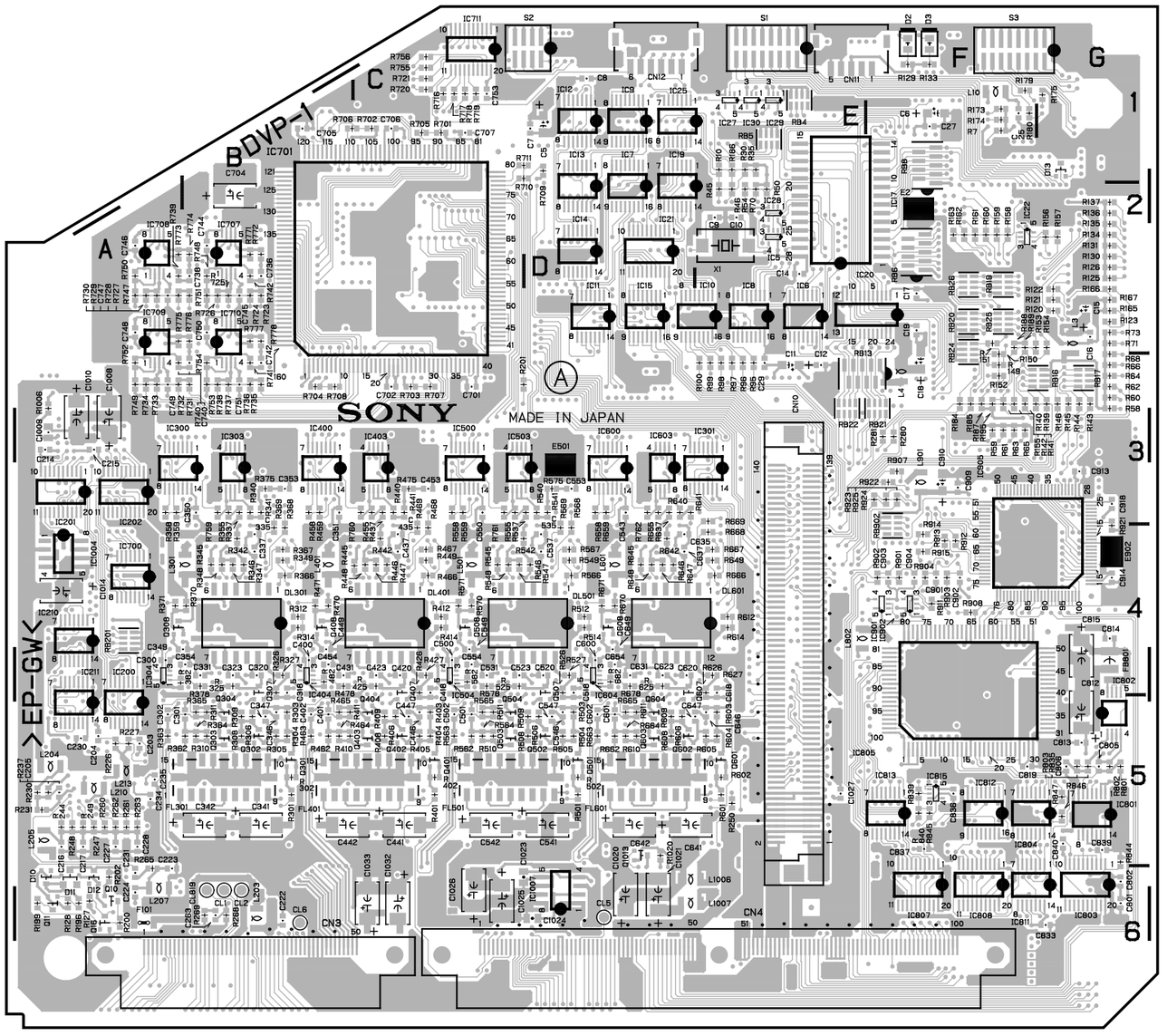

DNV-5(SY):S/N 10001 and Higher
DNV-5(J):S/N 30001 and Higher
DNW-7/90/90WS(SY):S/N 10001 and Higher
DNW-7/90/90WS(J):S/N 30001 and Higher
DNW-7P/90P/90WSP(SY):S/N 40001 and Higher

DVP-1 -A SIDE-
1-662-305-11

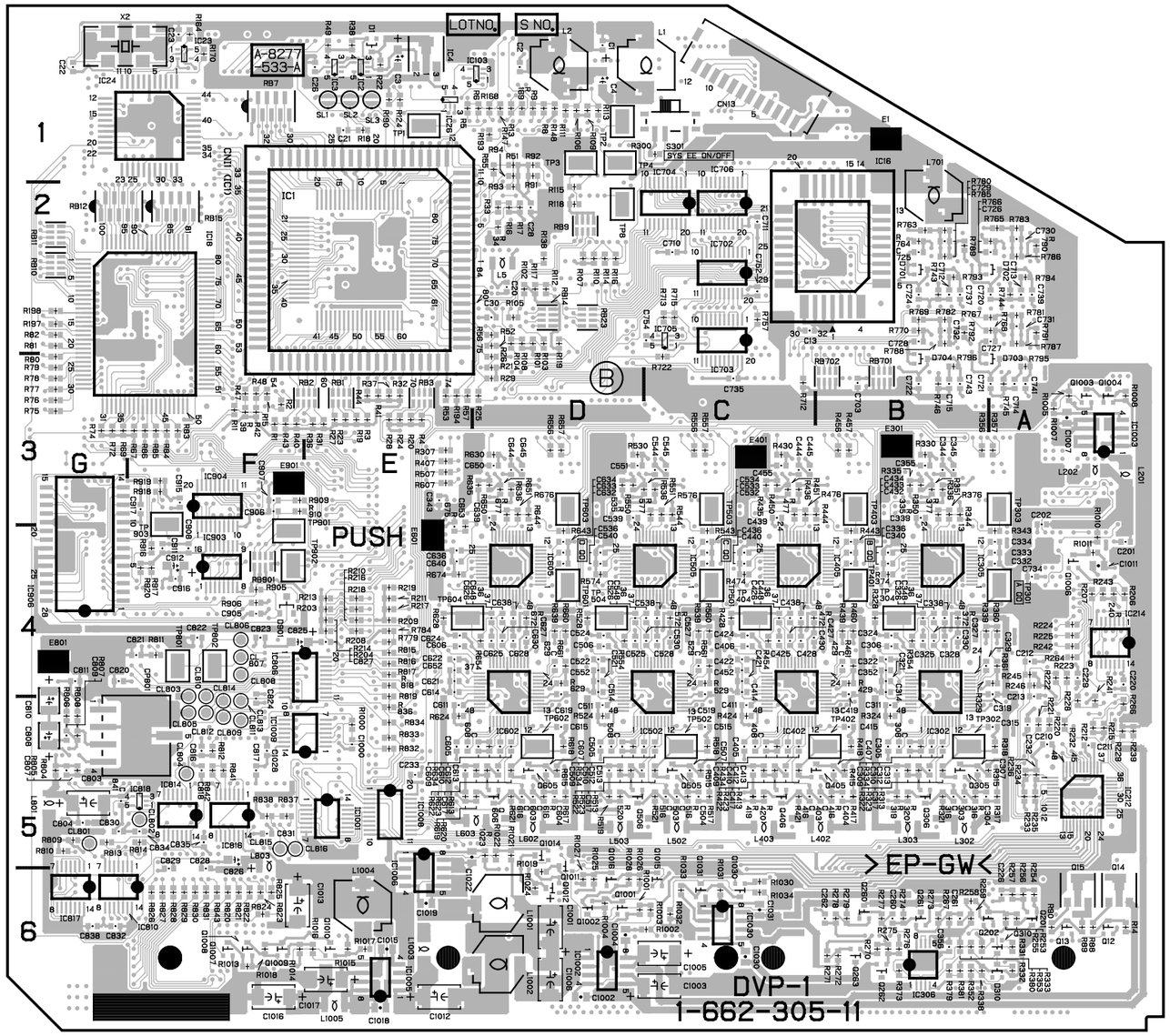

DVP-1 -B SIDE-
1-662-305-11

R89	*A6	R197	*G2	R316	*B5	R434	*C5	R562	C5	R709	D1	R812	*F5	RB5	E1				
R90	*A6	R198	*G2	R317	*A5	R435	*C3	R563	C5	R710	C1	R813	*G5	RB6	F2				
R91	*D1	R199	A6	R318	*A5	R436	*C3	R564	C5	R711	C1	R814	*F5	RB7	*F1				
R92	*D1	R200	A6	R319	*B5	R437	C3	R565	C5	R712	*C3	R815	*E4	RB8	F1				
R93	*D2	R201	C3	R320	*B5	R439	*B4	R566	D4	R713	*C2	R816	*E4	RB9	*D2				
R94	*D1	R202	A6	R321	*B5	R440	C3	R567	D4	R715	*C2	R817	*E4	RB10	*G2				
R95	E3	R203	*E4	R322	*B5	R441	C3	R568	D4	R716	C1	R818	*E4	RB11	*G2				
R96	E3	R204	*E4	R323	*B5	R442	C4	R569	D4	R717	C1	R819	*E5	RB12	*G2				
R97	E3	R206	*A4	R324	*B5	R443	*B4	R570	C4	R718	C1	R820	*F6	RB13	E3				
R98	E3	R207	*A4	R325	B4	R444	*B3	R571	C4	R719	C1	R821	*F6	RB14	*D2				
R99	E3	R208	*E4	R326	B4	R445	C4	R572	*C4	R720	C1	R822	*F6	RB15	*F2				
R100	E3	R209	*E4	R327	B4	R446	C4	R574	*D4	R721	C1	R823	*F6	RB16	G3				
R101	*D2	R210	*E4	R328	*B4	R447	C4	R575	D3	R722	*C3	R824	*F6	RB17	G3				
R102	*D2	R211	*E4	R329	*A4	R448	C4	R576	*C3	R723	B2	R825	*F6	RB19	F2				
R103	*D2	R212	*A5	R330	*B3	R449	C4	R577	*C3	R724	B2	R826	*F6	RB20	F2				
R104	*D2	R213	*E4	R331	*A6	R450	*C3	R578	C4	R725	B2	R827	*F6	RB21	F3				
R105	*D2	R214	*E4	R332	*A6	R451	*C3	R582	C4	R726	B2	R828	*F6	RB22	E3				
R106	*D1	R215	*A5	R333	*B6	R454	*C4	R601	E5	R727	B2	R829	*F6	RB23	*D2				
R107	*D2	R216	*E4	R334	*B5	R455	C3	R602	E5	R728	A2	R830	*F6	RB24	F2				
R108	*D2	R217	*E4	R335	*B3	R456	*B3	R603	E5	R729	A2	R831	*F6	RB25	F2				
R109	*D1	R218	*E4	R336	*B3	R457	*B3	R604	E5	R730	A2	R832	*E5	RB26	F2				
R110	*D2	R219	*E4	R337	B3	R458	B3	R605	E5	R731	B3	R833	*E5	RB201	A4				
R111	*D1	R220	*A5	R338	*B6	R459	B3	R606	D5	R732	A3	R834	*E5	RB701	*B3				
R112	*D2	R221	*A5	R339	*B4	R460	*B4	R607	*E3	R733	A3	R835	G5	RB702	*B3				
R113	*D1	R222	*A4	R340	B3	R461	*B4	R608	D5	R734	A3	R836	*E5	RB901	*F4				
R114	*D2	R223	*A4	R341	B3	R462	B5	R609	D5	R735	B3	R837	*F5	RB902	F4				
R115	*D2	R224	*A4	R342	B4	R463	B5	R610	D5	R736	B3	R838	*F5						
R116	*D2	R225	*A4	R343	*A4	R464	B5	R611	D5	R737	B3	R839	F5	S1	E1				
R117	*D2	R226	A5	R344	*B3	R465	B5	R612	E4	R738	B3	R840	F5	S2	D1				
R118	*D2	R227	A5	R345	B4	R466	C4	R613	*D5	R739	A2	R841	*F5	S3	F1				
R119	*D2	R228	*A5	R346	B4	R467	C4	R614	E4	R740	A3	R842	*F5	S301	*C1				
R120	G2	R229	*A5	R347	B4	R468	C4	R615	*D5	R741	B3	R843	*F6	SL1	*E1				
R121	G2	R230	A5	R348	B4	R469	C4	R616	*D5	R742	B2	R844	G5	SL2	*E1				
R122	G2	R231	A5	R349	B4	R470	B4	R617	*D5	R743	*B2	R845	F5	SL3	*E1				
R123	G2	R232	*A5	R350	*B3	R471	B4	R618	*D5	R744	*A2	R846	G5						
R124	*E1	R233	*A5	R351	*B3	R472	*C4	R619	*E5	R745	*A3	R847	G5	TP1	*E1				
R125	G2	R234	*A5	R352	*B6	R474	*C4	R620	*D5	R746	*B3	R901	F4	TP2	*D1				
R126	G2	R235	*A5	R353	*B6	R475	C3	R621	*D5	R747	A2	R902	F4	TP3	*D1				
R127	A6	R236	*A5	R354	*B4	R476	*C3	R622	*D5	R748	B2	R903	F4	TP4	*D1				
R128	A6	R237	A5	R355	B3	R477	*C3	R623	*D5	R749	A3	R904	F4	TP8	*D2				
R129	F1	R239	*A5	R356	*B3	R478	B4	R624	*E5	R750	A2	R905	*F4	TP301	*A4				
R130	G2	R240	*A4	R357	*A3	R482	B4	R625	D4	R751	B2	R906	*F4	TP302	*B5				
R131	G2	R241	*A5	R358	A3	R501	D5	R626	E4	R752	A3	R907	F3	TP303	*A3				
R133	F1	R242	*A4	R359	A3	R502	D5	R627	E4	R753	B3	R908	F4	TP304	*B4				
R134	G2	R243	*A4	R360	*A4	R503	D5	R628	*E4	R754	B3	R909	*F3	TP401	*B4				
R135	G2	R244	A5	R361	*A4	R504	D5	R629	*D4	R755	C1	R910	*F3	TP402	*B5				
R136	G2	R245	*A4	R362	B5	R505	D5	R630	*D3	R756	C1	R911	F4	TP403	*B3				
R137	G2	R246	*A4	R363	A5	R506	D5	R634	*D5	R757	*C2	R912	F4	TP404	*C4				
R138	*D2	R247	A5	R364	B5	R507	*E3	R635	*D3	R759	B3	R913	F4	TP501	*C4				
R139	G3	R248	A5	R365	B5	R508	D5	R636	*D3	R760	C3	R914	F4	TP502	*C5				
R140	F3	R249	A5	R366	B4	R509	D5	R637	D3	R761	C3	R915	F4	TP503	*C3				
R141	F3	R250	E5	R367	B4	R510	C5	R639	*D4	R762	D3	R916	*F4	TP504	*D4				
R142	F3	R253	*A6	R368	B4	R511	C5	R640	D3	R763	*B2	R917	*F4	TP601	*D4				
R143	G3	R254	*A6	R369	B4	R512	D4	R641	D3	R764	*B2	R918	*F3	TP602	*D5				
R144	G3	R255	*A6	R370	B4	R513	*C5	R642	D4	R765	*A2	R919	*F3	TP603	*D3				
R145	G3	R256	*A6	R371	A4	R514	D4	R643	*D4	R766	*A2	R920	*F4	TP604	*E4				
R146	G3	R257	*A6	R372	*B4	R515	*C5	R644	*D3	R767	*A2	R921	G4	TP801	*F4				
R147	*D1	R258	*B6	R373	*B6	R516	*C5	R645	D4	R768	*A2	R922	F3	TP802	*F4				
R148	*D1	R259	*B6	R374	*B4	R517	*C5	R646	D4	R769	*B2	R923	F3	TP901	*F4				
R149	F3	R260	A5	R375	B3	R518	*C5	R647	D4	R770	*B2	R924	F3	TP902	*F4				
R150	F3	R261	A5	R376	*B3	R519	*D5	R648	D4	R771	B2	R925	F3	TP903	*F3				
R151	F2	R262	A5	R377	*B3	R520	*D5	R649	E4	R772	B2	R1000	*E5						
R152	F3	R263	A5	R378	B4	R521	*C5	R650	*D3	R773	A2	R1001	*D6	X1	E2				
R153	F2	R264	*A4	R379	*B6	R522	*D5	R651	*D3	R774	B2	R1002	*C6	X2	*G1				
R154	G2	R265	A6	R380	*B6	R523	*D5	R654	*D4	R775	A2	R1003	*C6						
R155	F3	R266	*A5	R381	*B6	R524	*D5	R655	D3	R776	B2	R1004	*D6						
R156	G2	R267	*B6	R382	A4	R525	C4	R656	*D3	R777	B2	R1005	*A3						
R157	G2	R268	B6	R401	C5	R526	D4	R657	*D3	R778	B2	R1006	A3						
R158	F2	R269	B6	R402	C5	R527	D4	R658	D3	R779	*E4	R1007	*A3						
R159	F2	R270	*B6	R403	C5	R528	*D4	R659	D3	R780	*B2	R1008	*A3						
R160	F2	R271	*B6	R404	C5	R529	*C4	R660	*D4	R781	*A2	R1010	*A4						
R161	F2	R272	*B6	R405	C5	R530	*D3	R661	*D4	R782	*B2	R1011	*A4						
R162	F2	R273	*B6	R406	C5	R534	*D5	R662	D5	R783	*A2	R1013	*F6						
R163	F2	R274	*B6	R407	*E3	R535	*D3	R663	D5	R784	*E4	R1014	*F6						
R164	*F1	R275	*B6	R408	C5	R536	*C3	R664	D5	R785	*B2	R1015	*E6						
R165	G2	R276	*B6	R409	C5	R537	D3	R665	D5	R786	*A2	R1016	*E6						
R166	G2	R277	*B6	R410	B5	R539	*C4	R666	E4	R787	*A2	R1017	*E6						
R167	G2	R278	*B6	R411	B5	R540	D3	R667	E4	R788	*B2	R1018	*F6						
R168	*D1	R279	*B6	R412	C4	R541	D3	R668	E4	R789	*B2	R1019	*D6						
R169	*D1	R280	F3	R413	*C5	R542	C4	R669	E3	R790	*A2	R1020	D5						
R170	*F1	R281	F3	R414	C4	R543	*C4	R670	D4	R791	*A2	R1021	*D5						
R173	F1	R300	*C1	R415	*B5	R544	*C3	R671	D4	R792	*B2	R1022	*D5						
R174	F1	R301	B5	R416	*B5	R545	C4	R672	*D4	R793	*B2	R1023	*D5						
R175	G1	R302	B5	R417	*B5	R546	D4	R674	*E4	R794	*A2	R1024	*D6						
R179	F1	R303	B5	R418	*B5	R547	C4	R675	*E4	R795	*A3	R1025	*D6						
R180	F1	R304	B5	R419	*C5	R548	C4	R676	*D3	R796	*B3	R1026	*D6						
R184	F3	R305	B5	R420	*C5	R549	D4	R677	*D3	R801	G5	R1027	*D6						
R185	F3	R306	B5	R421	*C5	R550	*D3	R678	D4	R802	G5	R1028	*D6						
R186	E1	R307	*E3	R422	*C5	R551	*C3	R682	D4	R803	G5	R1030	*C6						
R187	F3	R308	B5	R423	*C5	R554	*D4	R701	C1	R804	*G5	R1031	*C6						
R188	F2	R309	B5	R424	*C5	R555	C3	R702	C1	R805	*G5	R1032	*C6						
R189	F2	R310	B5	R425	C4	R556	*C3	R703	C3	R806	*G5	R1033	*C6						
R190	*E1	R311	B5	R426	C4	R557	*C3	R704	B3	R807	*G5	R1034	*C6						
R193	*D1	R312	B4	R427	C4	R558	C3	R705	C1	R808	*G5	RB1	*E3						
R194	*E3	R313	*B5	R428	*C4	R559	C3	R706	B1	R809	*G5	RB2	*E3						
R195	F3	R314	B4	R429	*B4	R560	*C4	R707	C3	R810	*G5	RB3	*E3						
R196	A6	R315	*B5	R430	*C3	R561	*C4	R708	B3	R811	*F4	RB4	E1						

DVP-2 (1-662-306-12)
---
* : B SIDE

C106	F5	C327	A2	CL306	B4	D102	*E3	R102	*F5	RB115	*E3
C108	F5	C328	*A3	CL307	B4	D103	*E3	R103	*F5	RB201	*E4
C109	F5	C334	A2	CL308	B4	D104	*E3	R104	*F5	RB202	*F4
C110	F6	C337	*A3	CL309	B4	D401	F1	R105	*F6	RB203	*F4
C111	F6	C339	A2	CL310	B4			R106	*F6	RB204	*F5
C115	*F5	C340	B3	CL311	B4	E301	B2	R109	*E5	RB205	*F4
C116	*F5	C341	A2	CL312	A4	E501	F2	R110	*E5	RB206	*F4
C117	*F5	C342	*C1	CL313	A4			R115	*D5	RB207	*F4
C118	*F6	C343	*A3	CL314	A4	FB307	B3	R116	*D5	RB501	*E2
C119	*F6	C401	*C3	CL315	A4	FB308	C1	R117	*E3	RB502	*E2
C122	*D5	C402	*B3	CL332	A4	FL101	E5	R118	*D3		
C123	*F5	C403	*B5	CL333	A4	FL102	E5	R119	*D5	S401	F1
C124	*D5	C404	*C5	CL334	B4	FL103	E6	R120	*D5	SL601	B1
C125	*E4	C405	*D4	CL335	B4			R122	*D5	SL602	B2
C126	*D5	C406	*C4	CL336	A3	IC101	F5	R123	*D5		
C127	*E4	C407	*B4	CL337	A3	IC102	F5	R124	*D4		
C128	*F6	C408	*B5	CL338	A3	IC103	F6	R125	*D5		
C129	*E4	C409	*C6	CL339	A3	IC105	*E5	R126	*D5		
C130	*D2	C410	*C6	CL340	A4	IC106	*C5	R127	*D5		
C131	*C3	C411	*C5	CL401	D5	IC107	*C5	R128	*D4		
C132	*B3	C412	*C5	CL402	D5	IC108	E4	R129	*D4		
C133	*C3	C414	*D4	CL403	D5	IC109	D5	R130	*F3		
C134	*D4	C415	*D4	CL404	D5	IC110	E4	R131	*F3		
C135	C3	C416	B6	CL405	D5	IC111	D5	R132	*E3		
C136	*D2	C417	*C6	CL406	D5	IC112	E4	R133	*F3		
C137	*E4	C418	*C6	CL407	D5	IC113	E3	R134	*F3		
C138	*E4	C419	*C6	CL408	D5	IC114	D3	R135	*F3		
C139	*D5	C501	*F2	CL416	B5	IC116	C3	R136	*F3		
C201	*E5	C502	*E2	CL425	D5	IC117	B3	R137	*F3		
C202	*F5	C504	*E2	CL426	D5	IC118	C3	R138	*E5		
C203	*F4	C505	*E2	CL427	D5	IC119	D4	R139	*E5		
C204	*F4	C506	*E1	CL428	D4	IC120	C3	R140	*E5		
C205	*D6	C507	*E2	CL429	B4	IC121	D3	R141	*E3		
C206	*D6	C508	*F2	CL430	C6	IC122	D6	R142	*E3		
C207	*A5	C509	F2	CL431	C4	IC123	E3	R143	*E5		
C208	*A5	C510	F1	CL432	C4	IC125	E5	R144	*D6		
C209	*A5	C511	*E1	CL433	D5	IC126	*E5	R145	*D6		
C210	*A4	C512	*E1	CL434	D5	IC127	F3	R148	*D6		
C211	*A4	C513	*F3	CL435	C6	IC128	E4	R149	*D6		
C212	*B4	C514	E1	CL436	C6	IC129	E4	R150	*D5		
C213	*B5	C515	E1	CL437	C6	IC130	D5	R151	*D5		
C214	*B6	C516	E1	CL438	A4	IC131	*E6	R152	*E5		
C215	*A6	C517	F2	CL439	B4	IC132	E3	R153	*E3		
C216	*A6	C518	F2	CL447	D5	IC134	E4	R154	*E3		
C217	A6	C519	F2	CL448	D5	IC201	F4	R200	*B4		
C218	*B4	C601	*D2	CL449	F1	IC202	C6	R209	*B6		
C219	*B4	C602	*D2	CL508	F2	IC203	D6	R210	*B6		
C220	*A5	C603	*C1	CL517	E1	IC204	A5	R211	*D6		
C221	*A4	C604	*B1	CL518	E1	IC205	*B5	R212	*D6		
C222	*A4	C605	*B2	CL530	D2	IC206	B6	R214	*A6		
C223	*B4	C606	*B2	CL531	D2	IC207	*A5	R215	*A6		
C224	*B5	C607	*C2	CL532	D2	IC208	A6	R216	*B5		
C225	*B5	C608	B2	CL533	D2	IC209	E6	R217	*A6		
C226	*B6	C609	*B2	CL534	D2	IC210	D6	R230	*F4		
C227	B6	C611	*C2	CL535	D2	IC211	E6	R231	*E6		
C228	*A6	C612	*C2	CL536	D2	IC212	E6	R232	*E6		
C229	*B6	C614	*D2	CL537	D2	IC213	E6	R316	A2		
C230	*B5	C615	*C1	CL538	D2	IC214	F4	R317	A2		
C231	*A5	C616	*B2	CL539	D2	IC215	F5	R322	A2		
C232	*B5	C617	*D2	CL540	D2	IC216	F3	R323	*A3		
C233	*B6	C619	*D1	CL541	E2	IC302	A3	R324	*C1		
C234	*B6	C620	B3	CL542	E2	IC307	*A3	R325	*C1		
C235	*B6	C621	C3	CL543	E2	IC309	*A2	R326	A2		
C236	*A5	C622	B3	CL544	D2	IC310	C3	R327	*C1		
C237	*A5	C623	*C2	CL546	E1	IC311	*A2	R328	*C1		
C238	*A5	C624	D2	CL548	D2	IC312	*C1	R413	*C5		
C239	*A6	C625	D2	CL549	D2	IC313	*A3	R414	*B5		
C241	*A6	C626	D2	CL551	D2	IC401	*D4	R415	*B5		
C242	*A6	C627	D2	CL552	D2	IC402	*C4	R416	*B4		
C243	*E6	CL101	D6	CL553	E2	IC403	*B5	R417	*C4		
C244	*F4	CL102	D5	CL554	F2	IC404	*C5	R421	F1		
C245	*D6	CL103	D6	CL555	E1	IC405	C5	R423	F1		
C246	*E6	CL104	D6	CL556	D2	IC406	*B5	R501	*E2		
C247	*E6	CL105	E5	CL557	D2	IC407	*C5	R502	*E1		
C248	*F6	CL106	E6	CL558	D2	IC408	D4	R517	*F3		
C249	*F5	CL218	B4	CL559	D2	IC409	B6	R518	*F3		
C250	*F3	CL219	B4	CL560	D2	IC411	*F3	R519	F2		
C251	*F3	CL220	F5	CL561	D2	IC501	*E2	R601	*C2		
C252	*F4	CL221	F4	CL562	D2	IC502	*E2	R602	*C2		
C302	*B3	CL222	D6	CL563	D2	IC504	E2	R603	*C2		
C303	*B3	CL223	D6	CL601	C2	IC505	*E1	R604	*C1		
C304	A2	CL224	B5	CL602	C1	IC506	F3	R611	*D1		
C305	*A3	CL225	B5	CL603	C1	IC507	*F2	RB101	*E5		
C306	*A4	CL226	B5	CL604	C1	IC508	*E1	RB102	*D5		
C307	*B4	CL227	B4	CL605	C1	IC601	C2	RB103	*D5		
C308	*B3	CL228	B5	CL606	B1	IC602	*C1	RB104	*D5		
C309	*B3	CL229	F4	CL608	B1	IC608	*C3	RB105	*E5		
C310	*B3	CL230	B5	CL609	B2	IC609	*D2	RB106	*E4		
C314	*A4	CL231	F3	CL610	C1			RB107	*E4		
C316	*A4	CL232	F3	CL611	C1	L401	*C4	RB108	*D3		
C319	*B3	CL233	F3	CL612	B1			RB109	*D3		
C320	*B4	CL301	B4	CL613	D2	Q101	*F6	RB110	*D3		
C321	*A4	CL302	B4	CN10	*E4	Q102	*F6	RB111	*D4		
C322	*A4	CL303	B4	CP401	*B5	Q106	*F5	RB112	*E4		
C323	*A3	CL304	B4			Q107	*F5	RB113	*D3		
C326	*A3	CL305	B4	D101	*E3	Q108	*F5	RB114	*D3		

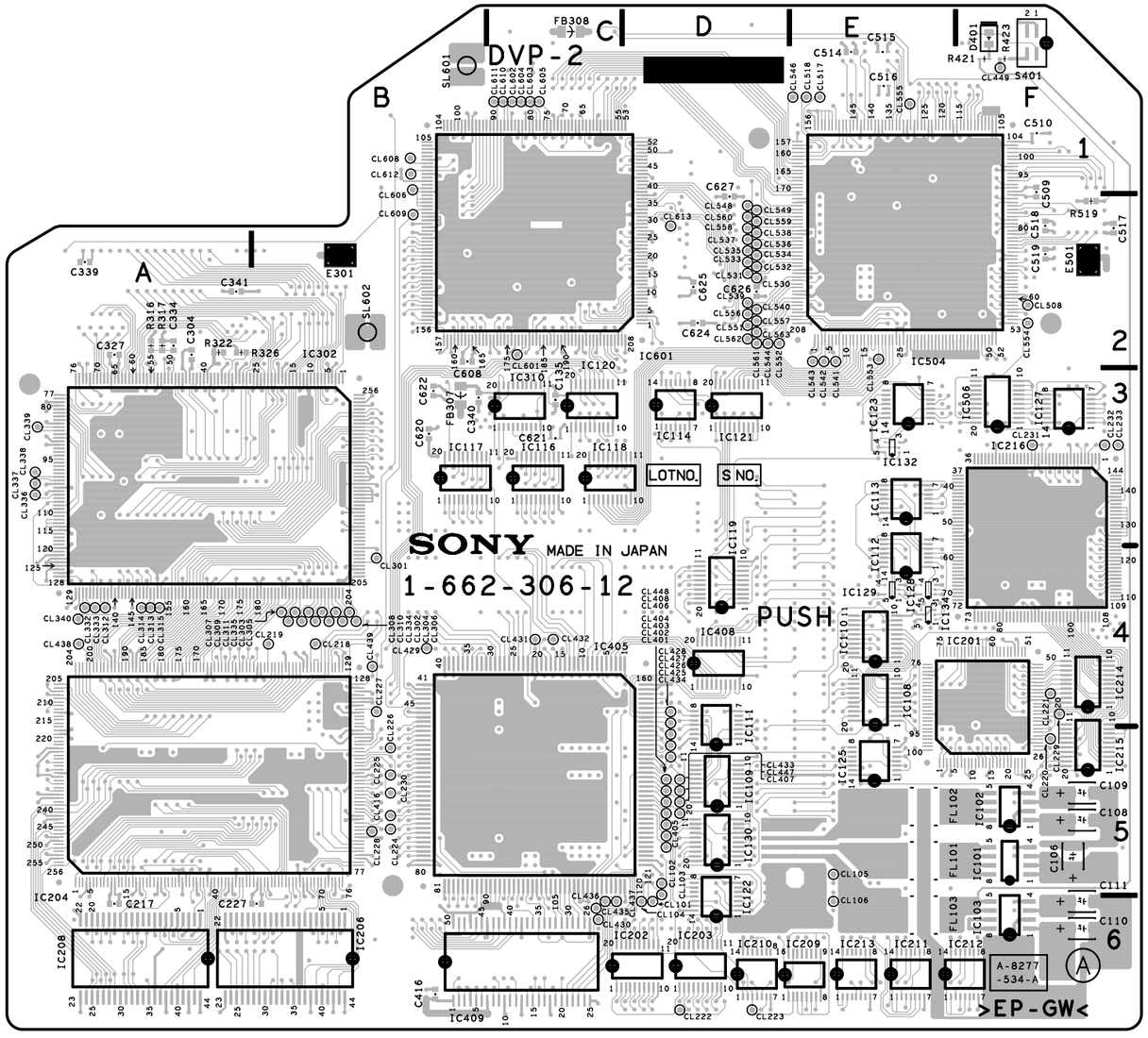

DNV-5(SY):S/N 10001 and Higher
DNV-5(J):S/N 30001 and Higher
DNW-7/90/90WS(SY):S/N 10001 and Higher
DNW-7/90/90WS(J):S/N 30001 and Higher
DNW-7P/90P/90WSP(SY):S/N 40001 and Higher

DVP-2 -A SIDE-
1-662-306-12

http://getMANUAL.com

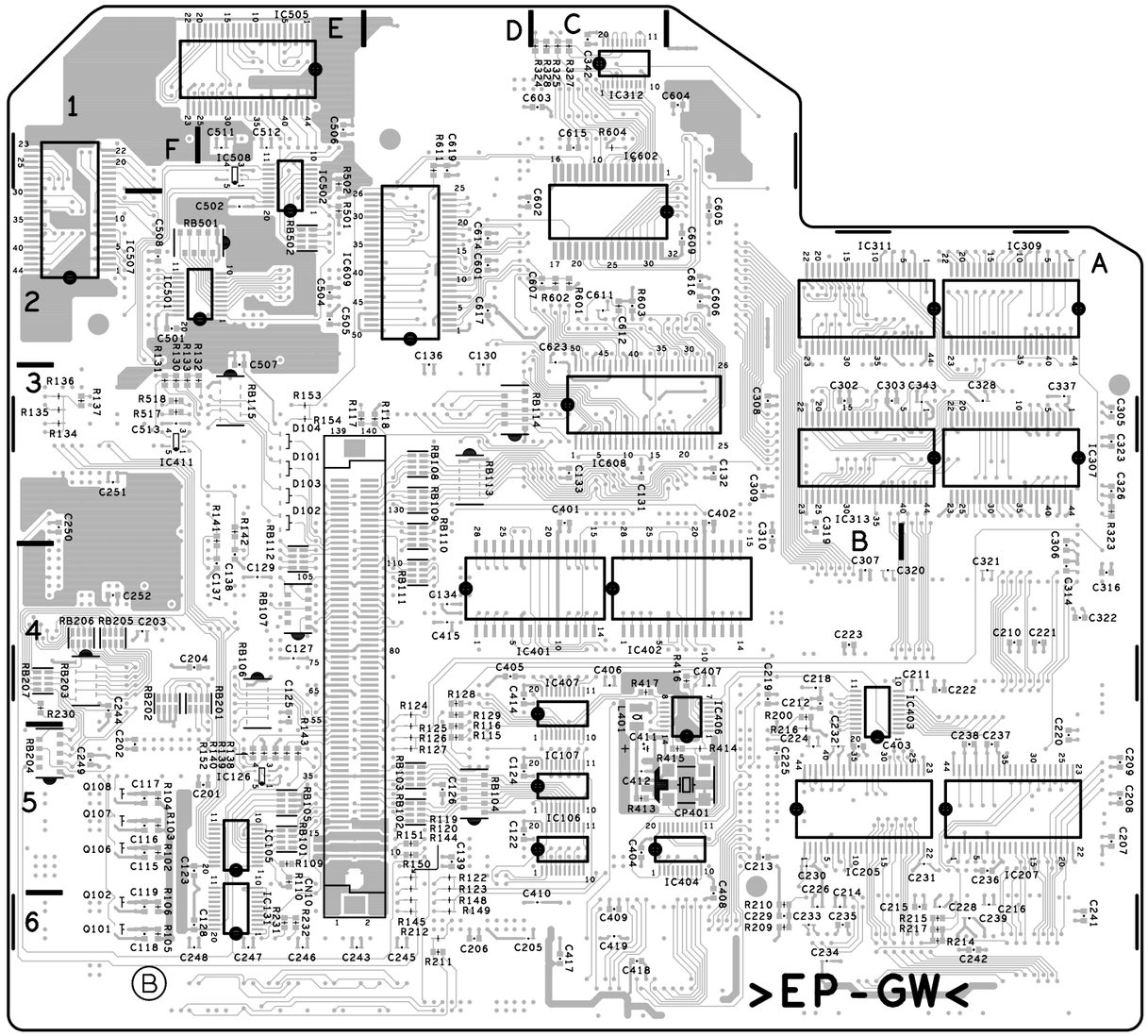

DVP-2 -B SIDE-
1-662-306-12

IF-634 (1-662-772-12)
---
* : B SIDE

C1	* D1	C400	* C4	C638	F1	CN3	F2	IC506	C2	LA1	D2	R117	* A3	R330	* C3
C2	* D1	C401	* C4	C639	* D2	CN700	C1	IC507	* C2	LA2	D2	R118	* A3	R331	* C3
C4	* D2	C402	* C5	C700	D2	CP600	E3	IC510	E2	LA3	D2	R119	* A3	R332	* B3
C5	* F1	C403	* C5	C701	* C3			IC511	* E1	LA4	D2	R120	A3	R333	* C3
C6	* F1	C404	* C5	C702	* D2	D100	* A3	IC512	* E1	LA5	D1	R121	* A3	R334	* C4
C7	* E4	C405	* C4	C703	* C2	D200	* A4	IC513	* E2	LA6	D1	R122	* A3	R335	* B3
C100	* A5	C406	* C4	C704	* C2	D300	* B4	IC515	* B2			R123	* A3	R336	* B4
C101	* A5	C407	* C4	C705	* C2	D500	* C1	IC516	* B2	Q100	* A5	R124	* A3	R337	* C3
C102	A5	C408	* C2	C706	* C2	D501	* C1	IC517	B2	Q101	* A3	R125	* A3	R338	B3
C103	* A5	C409	* C2	C707	* D3	D502	* C1	IC518	* C2	Q102	* A3	R126	* C3	R400	* C5
C104	* A5	C410	C4	C708	D3	D503	* B1	IC519	* C2	Q103	* A3	R127	* C3	R401	* C5
C105	* A5	C411	* C4	C709	* C3	D504	* B1	IC520	* C1	Q104	* A3	R128	* A4	R402	* C5
C106	* A3	C412	* C3	C710	D3	D505	* B1	IC521	* B2	Q105	* A3	R129	* A4	R403	* C5
C107	* A4	C413	* C4	C711	D3	D700	D4	IC601	* E1	Q106	* A3	R130	* A4	R404	* C4
C108	A3	C414	* C3	C712	C3	D701	D4	IC602	* E1	Q200	* B5	R131	A3	R405	* C4
C109	* A3	C415	* C4	C713	* D5	D702	* D3	IC603	* E2	Q201	* B4	R132	A3	R406	* C4
C110	* A3	C416	* C4	C714	* D3	D703	* D3	IC604	* E2	Q202	* B4	R133	A3	R407	* C4
C111	* A3	C417	* C3	C715	* D3	D704	* D3	IC605	E3	Q203	* B4	R134	* A3	R408	* C4
C112	A3	C418	* C3	C716	* E3	D705	* D3	IC606	E3	Q204	* B4	R135	* A3	R409	* C4
C113	* A3	C420	* A2	C717	* D3	D710	* D2	IC607	* E1	Q205	* B4	R136	* A3	R410	* C4
C114	* A3	C422	* A2	C718	* D3	D900	* D5	IC608	F4	Q206	* B3	R137	* A3	R411	* C4
C115	* C3	C425	* A2	C719	D3	D901	* D4	IC609	F3	Q207	* B5	R138	* A3	R412	C4
C116	* C3	C426	* A2	C720	* D4	D902	* C5	IC610	F4	Q208	* C5	R139	* A3	R413	* C4
C117	* A4	C427	* B2	C721	* D4	D903	* C4	IC611	F3	Q209	* C5	R140	A3	R414	* C4
C118	* A4	C428	* B2	C722	D3			IC612	F4	Q300	* B5	R200	* B5	R415	* C4
C119	* A3	C429	* B2	C732	E4	E100	A5	IC613	* D2	Q301	* B4	R201	* B5	R416	* C4
C120	* A3	C430	B2	C733	E5	E101	A3	IC614	* F1	Q302	* B4	R202	* B5	R417	* C3
C121	* A3	C431	* A2	C734	* E5	E200	A3	IC615	D2	Q303	* B4	R203	* B5	R418	* C3
C122	* A3	C432	* B2	C735	* E5	E300	B3	IC616	D2	Q304	* B4	R204	* B5	R419	* C3
C123	* A3	C500	* B2	C736	* E5	E400	F4	IC617	* E3	Q305	* C4	R205	* B4	R420	* C3
C124	* A3	C501	* B2	C737	* E5	E500	A2	IC618	* D2	Q306	* B3	R206	* A4	R421	* C3
C125	* A3	C502	B2	C738	* E5	E501	* F2	IC621	* D2	Q400	* C5	R207	* B4	R422	* C3
C126	* A3	C503	* B1	C739	* E5	E700	C1	IC622	F5	Q401	* C4	R208	* B4	R423	* C3
C127	* A3	C504	* B2	C740	* D4	E701	B2	IC623	F4	Q600	* F1	R209	* B4	R424	* C3
C128	* A3	C505	* B1	C741	* D4	E702	B3	IC624	F5	Q700	* D3	R210	* B4	R425	* C3
C129	* A2	C506	* C1	C742	* E5	E703	* D5	IC625	F5	Q701	* D3	R211	* B4	R426	* C3
C130	* A3	C507	* C2	C743	D4			IC626	* D2	Q702	D3	R212	* A4	R427	* C3
C200	* A5	C508	* C2	C744	D5	FB100	* A5	IC627	* E2	Q703	* D3	R213	* A4	R428	* C3
C201	* B5	C509	* E2	C745	* D4	FB200	* B5	IC628	F1	Q704	* D3	R214	* B4	R429	* C3
C202	B5	C510	* D1	C746	* D5	FB300	* B5	IC629	F5	Q705	* C5	R215	* B4	R430	* C3
C203	* B5	C511	* D1	C747	* D4	FB600	* F3	IC630	* F1	Q706	* D5	R216	* B4	R431	* C3
C204	* B4	C512	* D1	C748	* D4	FL100	A4	IC631	F1	Q707	* E5	R217	* B4	R432	* C3
C205	* A4	C513	* D2	C749	* D5	FL200	B4	IC632	* F4	Q708	E5	R218	* B4	R500	* C2
C206	A4	C514	* E1	C750	* D5	FL300	B4	IC633	* E3	Q709	D4	R219	B4	R501	* C2
C207	* B4	C515	* D2	C751	* D5	FL600	* D2	IC634	* F3	Q710	D4	R220	* B4	R502	* C2
C208	* B4	C516	* D2	C752	* E4	FL700	D4	IC700	* D2	Q711	D4	R221	* A4	R503	* D1
C209	* B4	C517	* D1	C753	* C3			IC701	* C3	Q712	* E5	R222	* B4	R504	* B2
C210	B4	C518	* E2	C756	D4	IC1	* D1	IC702	D3	Q713	* E5	R223	* B4	R505	* B2
C211	* A4	C519	* D2	C758	* E4	IC2	E1	IC703	D3	Q714	* E5	R224	B4	R506	* B1
C212	* A4	C520	* B2	C759	* D5	IC3	* D2	IC704	C2	Q715	E5	R225	B4	R507	* C2
C213	* C3	C521	* C2	C760	* D5	IC4	* F1	IC705	C3	Q716	* E5	R226	B4	R508	* C2
C214	* C3	C523	* B2	C761	* D5	IC5	* F1	IC706	D3	Q717	* E5	R227	* B3	R509	* C1
C215	* C3	C524	* B2	C762	* D5	IC10	* E3	IC707	D3	Q718	* E5	R228	* C3	R510	* C1
C216	* C3	C525	* B2	C851	* E4	IC11	E3	IC708	C3	Q719	E5	R229	* C3	R511	* C1
C217	* B3	C526	C2	C852	* E4	IC100	A3	IC709	E4	Q720	* C5	R230	* B3	R512	* C1
C218	* B3	C527	C2	C853	E4	IC101	A3	IC710	* C5	Q721	* E4	R231	* B3	R513	* C2
C219	* B3	C528	* C1	C854	E4	IC102	C3	IC712	D3	Q722	D5	R232	* C3	R514	E2
C220	* B3	C529	B2	C855	* E4	IC103	* A4	IC713	* E4	Q723	D5	R233	* B4	R515	E2
C221	* B3	C600	F1	C856	E4	IC104	A3	IC714	E5	Q900	* C5	R234	* B3	R516	* D1
C222	* B3	C601	* F1	C857	E4	IC105	A3	IC716	E5	Q902	* C5	R235	* B4	R517	* B1
C223	* B3	C602	* E2	C858	* E4	IC200	B4	IC717	E5	Q904	* C5	R236	* C3	R518	* B1
C224	* A3	C603	* E2	C859	* E4	IC201	B4	IC718	D4	Q906	* A2	R237	A3	R519	* B1
C225	* B3	C604	* E2	C864	* E4	IC202	C3	IC719	D5	Q907	B2	R238	* B5	R521	* B2
C226	* B3	C605	* E2	C865	* E4	IC203	C3	IC721	* E4	Q908	D5	R239	* B5	R522	* B2
C227	* B3	C606	* E2	C866	* E4	IC204	B3	IC724	* C5	Q909	D4	R240	* C5	R600	* E1
C228	* B3	C607	* F2	C900	* D5	IC205	B3	IC725	* C3	Q910	C5	R241	* C5	R601	* E1
C229	* C3	C608	* E2	C901	* D5	IC300	B4	IC726	* D3	Q911	C4	R242	* C5	R602	* E1
C300	* B5	C609	F3	C902	* C4	IC301	B4	IC727	* D4	Q912	* C4	R300	* B5	R603	* E1
C301	* B5	C610	* F3	C903	* B2	IC304	B3	IC728	* E3	Q913	* C4	R301	* B5	R604	* E1
C302	C5	C611	* F2	C904	* D5	IC305	B3	IC729	* E3			R302	* B5	R605	* E2
C303	* B5	C612	F2	C905	* D5	IC401	C5	IC730	E3	R1	* E1	R303	* B5	R606	* E2
C304	* B4	C613	* E2	C908	* B2	IC402	C4	IC731	* E3	R10	* D2	R304	* B5	R607	* E2
C305	* B4	C614	* E3	C909	* D5	IC403	C2	IC732	E4	R11	* D2	R305	* B4	R608	* E2
C306	B4	C615	* E3	C910	* D4	IC404	C2	IC733	* E3	R12	* D2	R306	* B4	R609	* E2
C307	* B4	C616	* E3	C911	* D5	IC405	C4	IC734	D5	R13	* D2	R307	* B4	R610	* E2
C308	* B4	C617	* F4	C912	* D4	IC406	C3	IC851	E4	R14	* D2	R308	* B4	R611	* E2
C309	* B4	C618	* F3	C913	* C5	IC407	C4	IC852	* E4	R15	* D2	R309	* B4	R612	* E2
C310	C4	C619	* F4	C914	* C4	IC408	C4	IC853	* E4	R16	* D2	R310	* B4	R613	E2
C311	* B4	C620	* F4	C915	* D4	IC409	C3	IC854	* E4	R17	* D2	R311	* B4	R614	E2
C312	* B4	C621	* E4	C916	* C4	IC410	* C3	IC858	E4	R100	* A5	R312	* B4	R615	* E3
C313	* C3	C622	F1	C917	* C4	IC412	A2	IC900	* B2	R101	* A5	R313	* B4	R616	* E3
C314	* C3	C623	F1	C918	* D4	IC414	A2	IC901	D5	R102	* A5	R314	* B4	R617	* E3
C315	* C3	C624	* D1	C919	* C4	IC418	A2	IC903	* D5	R103	* A5	R315	* B4	R618	* E3
C316	* C3	C625	* C1	C920	C4	IC419	A3	IC904	C5	R104	* A5	R316	* B4	R619	* E3
C317	* C3	C626	* D2	C921	D5	IC420	B3			R105	* A5	R317	* B4	R620	* F3
C318	* B3	C627	* F5	C922	D4	IC421	B3	L600	* F1	R106	* A4	R318	* B4	R621	* F4
C319	* B3	C628	* F4	C923	C5	IC422	B3	L601	* E3	R107	* A3	R319	C4	R622	* F4
C320	* B3	C629	* F5	C924	C4	IC423	B2	L602	* F5	R108	* A4	R320	* B4	R623	* E4
C321	* B3	C630	* F5	CL500	C2	IC424	A2	L603	* F5	R109	* A3	R321	* B4	R624	* E4
C322	* B3	C631	* F5	CL501	C1	IC425	B2	L604	* F4	R110	* A4	R322	* B4	R625	* E4
C323	* B3	C632	* F4	CL502	C2	IC500	* C2	L605	* F5	R111	* A3	R323	* B4	R626	* E4
C324	* B3	C633	* F5	CL503	C1	IC501	* B1	L606	* F5	R112	* A3	R325	B4	R627	* E4
C325	* B3	C634	* F5	CL504	C2	IC502	* B2	L700	* D3	R113	* A3	R326	C4	R628	* F4
C326	* B3	C635	* E1	CL505	A2	IC503	C1	L701	* D4	R114	* A3	R327	C4	R629	* F4
C328	* B3	C636	* F5	CN1	B5	IC504	* C1	L704	* E5	R115	* A3	R328	* B3	R630	* F4
C329	* B3	C637	* F5	CN2	D5	IC505	* C2	L900	* D5	R116	* A3	R329	* C3	R631	* E4

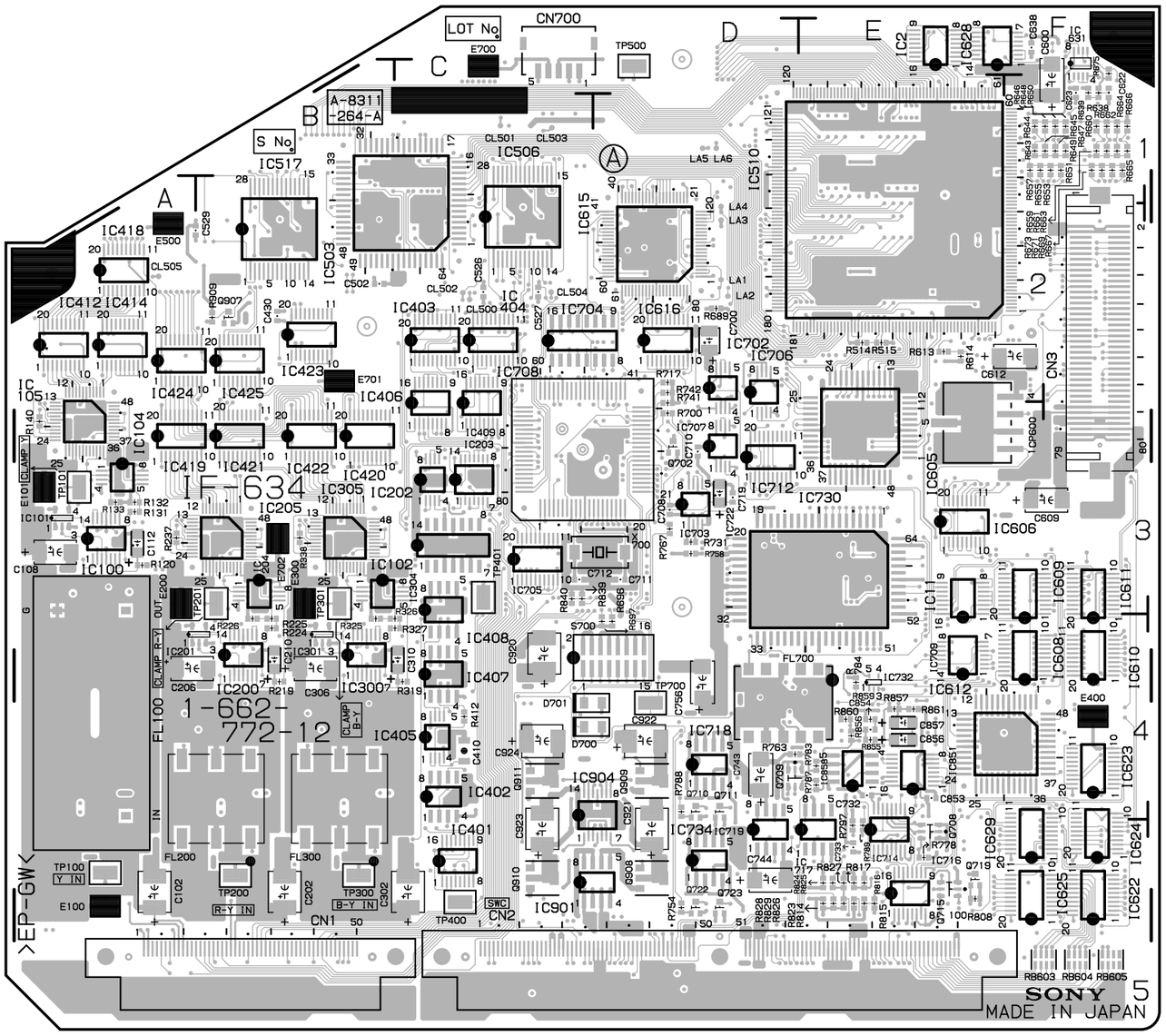

DNV-5(SY):S/N 10001 and Higher
DNV-5(J):S/N 30001 and Higher

IF-634 -A SIDE-
1-662-772-12

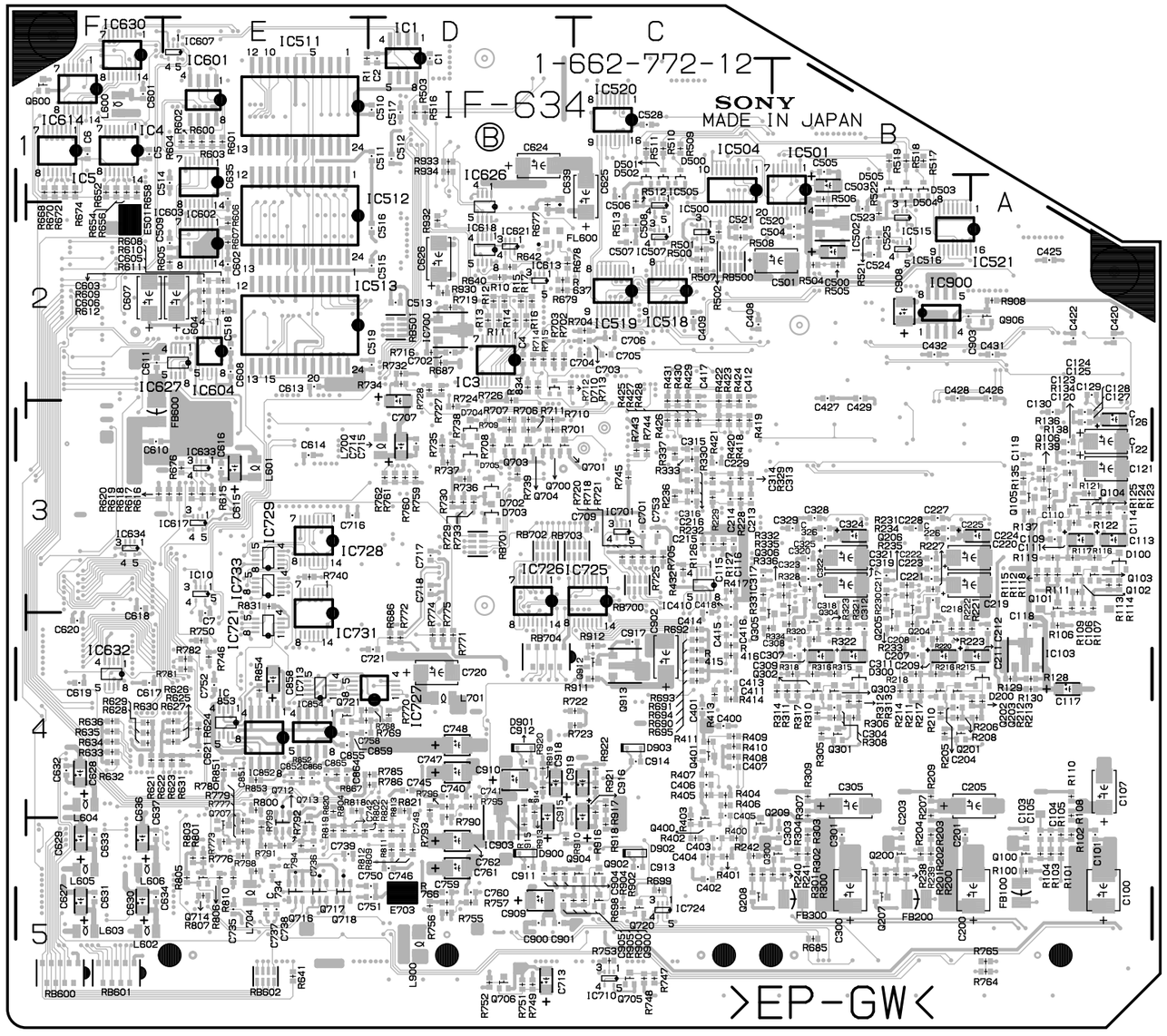

IF-634 -B SIDE-
1-662-772-12

R632	* F4	R734	* D2	R831	* E3		
R633	* F4	R735	* D3	R834	* D2		
R634	* F4	R736	* D3	R839	C3		
R635	* F4	R737	* D3	R840	C3		
R636	* F4	R738	* D3	R851	* E4		
R637	* D2	R739	* D3	R852	* E4		
R638	F1	R740	* E3	R853	* E4		
R639	F1	R741	D3	R854	* E4		
R640	* D2	R742	D2	R855	E4		
R641	* E5	R743	* C3	R856	E4		
R642	* D2	R744	* C3	R857	E4		
R643	F1	R745	* C3	R859	E4		
R644	F1	R746	* E4	R860	E4		
R645	F1	R747	* C5	R861	E4		
R646	F1	R748	* C5	R867	* E4		
R647	F1	R749	* D5	R900	* C5		
R648	F1	R750	* E4	R902	* D5		
R649	F1	R751	* D5	R904	* D5		
R650	F1	R752	* D5	R905	* D5		
R651	F1	R753	* C5	R908	* A2		
R652	* F1	R754	D5	R909	B2		
R653	F1	R755	* D5	R910	* D5		
R654	* F1	R756	* D5	R911	* C4		
R655	F1	R757	* D5	R912	* C4		
R656	* F1	R758	D3	R913	* D4		
R657	F1	R759	* D3	R914	* D4		
R658	* F1	R760	* D3	R915	* D5		
R659	F1	R761	* D3	R916	* C4		
R660	F1	R762	* D3	R917	* C4		
R661	F1	R763	D4	R918	* C5		
R662	F1	R764	* A5	R919	* D4		
R663	F1	R765	* A5	R920	* D4		
R664	F1	R766	* D5	R921	* C4		
R665	F1	R767	D3	R922	* C4		
R666	F1	R768	* E4	R930	* D2		
R667	F1	R769	* E4	R932	* D2		
R668	* F1	R770	* D4	R933	* D1		
R669	F1	R771	* D4	R934	* D1		
R670	* F1	R772	* D4	RB500	* C2		
R671	F1	R773	* E5	RB501	* D2		
R672	* F1	R774	* D4	RB600	* F5		
R673	F1	R775	* D4	RB601	* F5		
R674	* F1	R776	* E5	RB602	* E5		
R675	F1	R777	* E5	RB603	F5		
R676	* E3	R778	E5	RB604	F5		
R677	* D2	R779	* E5	RB605	F5		
R678	* D2	R780	* E5	RB700	* C3		
R679	* D2	R781	* E4	RB701	* D3		
R685	* B5	R782	* E4	RB702	* D3		
R686	* D4	R783	E4	RB703	* C3		
R687	* D2	R784	E4	RB704	* D4		
R689	D2	R785	* D4				
R690	* C4	R786	* D4	S700	D4		
R691	* C4	R787	E4				
R692	* C4	R788	D4	TP100	A5		
R693	* C4	R789	E5	TP101	A3		
R694	* C4	R790	* D4	TP200	B5		
R695	* C4	R791	* E5	TP201	B3		
R696	D4	R792	* E5	TP300	B5		
R697	D4	R793	* D4	TP301	B3		
R698	* C5	R794	* E5	TP400	C5		
R699	* C5	R795	* D4	TP401	C3		
R700	D3	R796	* D4	TP500	D1		
R701	* D3	R797	E5	TP700	D4		
R702	* D2	R798	* E5				
R703	* D2	R799	* E5	X700	D3		
R704	* C2	R800	* E4				
R705	* C3	R801	* E5				
R706	* D3	R802	* E5				
R707	* D3	R803	* E5				
R708	* D3	R804	* E5				
R709	* D3	R805	* E5				
R710	* D3	R806	* E5				
R711	* D3	R807	* E5				
R712	* D2	R808	E5				
R713	* D2	R809	* D5				
R714	* D2	R810	* E5				
R715	* D2	R811	* D5				
R716	* D2	R812	* D5				
R717	D2	R813	* D5				
R718	* C3	R814	E5				
R719	* D2	R815	E5				
R720	* C3	R816	E5				
R721	* C3	R817	E5				
R722	* C4	R818	* E4				
R723	* C4	R819	* E5				
R724	* D3	R820	* E4				
R725	* C3	R821	* D4				
R726	* D2	R822	* D5				
R727	* D2	R823	E5				
R728	* D2	R824	E5				
R729	* D3	R825	E5				
R730	* D3	R826	E5				
R731	D3	R827	E5				
R732	* D2	R828	E5				
R733	* D3	R829	E5				

ES-11 (1-662-309-11)
---
* : B SIDE

C1	*D3	C101	C2	CN2	*D3	Q5	D3	R22	*D2	R118	B3	R214	*A2	R312	C1	R414	*C3
C2	*D3	C102	C2	CN3	*D1	Q6	D2	R23	D2	R119	C3	R215	*A3	R313	*D2	R415	*C3
C3	*B3	C103	A3	CP1	D1	Q7	D2	R24	*D2	R120	C3	R216	*A2	R314	*D2	R416	*C3
C4	*B3	C104	*A3			Q8	D3	R25	*D2	R121	*B3	R217	*D3	R315	*D1	R417	*D3
C5	*D2	C105	*A3	D1	*C3	Q9	D2	R26	*D3	R122	*A3	R218	*D3	R321	D2	R418	D3
C6	*D2	C106	*A3	D2	C2	Q10	D2	R27	*D3	R123	*A3	R219	*D3	R322	D2	R419	D3
C7	*D2	C107	*A3	D3	C2	Q11	C2	R28	D2	R124	*A3	R220	*D3	R323	*D2	R420	*C2
C8	*D2	C108	*A3	D4	*A2	Q12	C2	R29	*D3	R125	*A3	R221	*D3	R324	*A2	R421	*C2
C9	*D3	C109	*A3	D5	*A2	Q13	C2	R30	*D3	R126	A3	R222	D4	R325	*A1	R422	A2
C10	D3	C110	*A2	D6	*D2	Q14	B2	R31	*D3	R127	*A3	R223	D3	R326	*A2	R423	A2
C11	D3	C111	*A2	D7	*D1	Q15	B3	R32	*D3	R128	A3	R224	D4	R327	*A2	R424	A4
C12	D3	C112	*A2	D8	*D2	Q16	B3	R33	*D3	R129	A3	R225	D3	R328	*A2	R425	*D3
C13	D3	C114	*D2	D9	C2	Q17	B2	R34	*D2	R130	A3	R226	D4	R329	*C1	R426	D4
C14	*C2	C115	*D2	D13	*D1	Q18	C2	R35	*D2	R131	A3	R227	D4	R330	*C1	R427	D4
C15	*D3	C116	*D1	DL1	B3	Q19	C2	R36	*D2	R132	A3	R228	D3	R332	*C1	R428	*B3
C16	D2	C117	*D2	DL2	B3	Q20	*C3	R37	*D2	R133	A3	R229	D3	R333	*C1	R429	*B3
C17	D2	C118	*D2			Q21	*C3	R38	*D2	R134	A4	R230	D3	R334	*C1	R430	*B3
C18	*C2	C119	*C1	FL1	D3	Q22	*C3	R39	*D2	R135	B2	R231	D3	R335	*C1	R431	*D4
C19	*C2	C120	A1	FL2	D3	Q23	*C3	R40	*C2	R136	B3	R232	C4	R336	*C1	R432	D4
C20	C2	C121	D2	FL3	C2	Q24	C3	R41	*D2	R137	*B2	R233	*C4	R337	*C1	R433	D4
C23	B3	C122	*D2	FL4	B2	Q25	C3	R42	*C2	R138	*B2	R234	*C4	R338	*C1	R434	*B3
C24	B2	C123	*D2	FL5	C3	Q26	C3	R43	*C2	R139	*B2	R235	*C4	R339	*C1	R435	*B3
C25	B2	C124	D2	FL6	C3	Q27	B3	R44	*C2	R140	*B2	R236	*C4	R340	*C1	R436	*B3
C26	*B2	C125	A2	FL7	A4	Q28	C3	R45	C2	R141	*B2	R237	*D4	R341	*C1	R437	*C1
C27	*C3	C126	*A2	FL8	B2	Q29	A3	R46	*C2	R142	B2	R238	*D4	R342	*C1	R438	*D1
C28	*C3	C127	*A2	FL9	C3	Q30	A3	R47	*C2	R143	*B2	R239	D4	R343	*B3	R439	*C1
C29	*A2	C128	*C1	FL10	D3	Q31	A3	R48	*C2	R144	*B2	R240	C4	R344	*B3	R440	*B2
C30	*C2	C129	*A2	FL11	C3	Q32	B2	R49	*C2	R145	*B2	R241	B4	R345	*D1	R441	*B2
C31	C3	C130	*C1	FL12	A4	Q33	*B2	R50	*C2	R146	*B2	R242	*B4	R346	D1	R442	A3
C32	*C3	C131	C2	FL13	A3	Q34	*B2	R51	*C4	R147	*B2	R243	*B4	R347	*D1	R443	*D3
C33	C3	C132	*C1	FL14	D4	Q35	D3	R52	*C4	R148	*B2	R244	*D2	R348	*C1	R444	A2
C34	C3	C133	*C1	FL15	D3	Q36	*C3	R53	C2	R149	*B2	R245	*B4	R349	*D1	R445	*D1
C35	*C3	C134	*C1	FL16	C4	Q37	*C3	R54	*D4	R150	*B2	R246	*B4	R350	*D1	R446	*D2
C36	C3	C135	*C1	FL17	A3	Q38	*C3	R55	C2	R151	*B2	R247	*B4	R351	*C1	R447	*D1
C37	C3	C136	*D1	FL18	A3	Q39	*D4	R56	*C2	R152	*B2	R248	*B4	R352	*C2	R448	*B3
C38	C3	C137	*D1			Q40	*B3	R57	C3	R153	*B2	R249	*B4	R353	*B2	R449	*B3
C39	C3	C138	D1	IC1	*D3	Q41	*B3	R58	C2	R154	*B2	R250	*B4	R354	*B2	R450	*B4
C40	*A3	C139	*D1	IC2	D3	Q42	*B3	R59	C3	R155	*B2	R251	*B4	R355	*B2	R451	D3
C41	*C3	C140	*A2	IC3	C2	Q43	*A4	R60	C2	R156	*B2	R252	*B4	R356	*A2	R452	*C4
C42	*C3	C141	*A2	IC4	B2	Q44	*A3	R61	C2	R157	*C2	R253	*B4	R357	B2	R453	*C4
C43	*C3	C142	*A2	IC5	D3	Q45	A3	R62	B2	R158	B2	R254	*B3	R358	*B2	R454	*B4
C44	*A3	C143	*A2	IC6	*B4	Q46	A2	R63	B2	R159	D3	R255	A3	R359	*A2	R455	A4
C45	*A3	C144	A2	IC7	B2	Q47	*D3	R64	B2	R160	D3	R257	B2	R360	*A2	RB1	*D2
C46	A3	C145	*A2	IC8	C2	Q48	*D3	R65	B2	R161	D3	R258	B3	R361	*A2		
C47	A3	C146	*A2	IC9	*C4	Q49	*C4	R66	*B2	R162	*D3	R259	B3	R362	*A2		
C48	A3	C147	*A2	IC10	*A3	Q50	*C4	R67	B2	R163	*D3	R260	A2	R363	*A2		
C49	A3	C148	A2	IC11	A2	Q51	*D4	R68	*B2	R164	*C3	R261	B2	R364	*A2		
C50	*B2	C149	*A2	IC12	A2	Q52	*B4	R69	B2	R165	*D3	R262	*B2	R365	*A2		
C51	C2	C150	*C1	IC13	*D2	Q53	*B4	R70	*B2	R166	C3	R263	B3	R366	*A2		
C52	B2	C151	C1	IC14	D2	Q54	*B4	R71	*B2	R167	C3	R264	*B2	R367	*A2		
C53	*B2	C152	*C1	IC15	D2	Q55	*A1	R72	C2	R168	*C3	R265	*C2	R368	*A2		
C54	B2	C153	*B3	IC16	D2	Q56	B2	R73	C2	R169	*C3	R266	*C2	R369	*A2		
C55	C2	C154	*C2	IC17	D2	Q57	*C2	R74	C2	R170	*C3	R267	*C2	R370	*A2		
C56	B2	C155	*A2	IC18	*D2	Q58	*C2	R75	C2	R171	*C3	R268	*C2	R371	*A2		
C57	*C3	C156	C4	IC19	D2	Q59	A3	R76	C2	R172	C3	R269	*C2	R372	*A2		
C58	*C3	C157	D4	IC20	*D2	Q60	A3	R77	C2	R173	C3	R270	*C2	R373	*A2		
C59	*D1	C158	*D3	IC21	A2	Q61	A3	R78	*D3	R174	C4	R271	*C2	R374	*A2		
C60	*D1	C159	D3	IC22	*C1	Q62	A3	R79	*D3	R175	*C3	R272	*C2	R375	*A3		
C61	*A3	C160	*C3	IC23	C1	Q63	A3	R80	*D3	R176	*C3	R273	*C2	R376	*C1		
C62	*C4	C161	C3	IC24	*C1	Q64	*A2	R81	*C3	R177	*C4	R274	*C2	R377	*C1		
C63	*B3	C162	D3	IC25	C1	Q65	*A2	R82	*C3	R178	*C4	R275	*C2	R378	*C1		
C64	*B4	C163	*C3	IC26	C1	Q66	*B3	R83	*C3	R179	*D3	R276	*C2	R379	*C1		
C65	*B2	C164	D3	IC27	D1	Q67	*B3	R84	*C3	R180	*D3	R277	C2	R380	*C1		
C66	*B3	C165	D3	IC28	A2	Q68	*B3	R85	*C3	R181	*C3	R278	*A3	R381	*C1		
C67	*A3	C166	D3	IC29	C1	Q69	B2	R86	*C3	R182	*C3	R279	*A3	R382	*C1		
C68	*B4	C167	A4	IC30	C1	Q70	*A3	R87	*C3	R183	*C3	R280	A3	R383	*C1		
C69	B3	C168	A3	IC31	*B3	Q71	*A3	R88	*C3	R184	*B3	R281	*A3	R384	*C1		
C70	B3	C169	*A3	IC32	A2	Q72	*D1	R89	*C3	R185	*B4	R282	*A3	R385	*C1		
C71	A3	C170	A3	IC33	*C4	Q73	*B3	R90	*C3	R186	*B3	R283	*A3	R386	*C1		
C72	A4	C171	A3	IC34	*A2	Q74	*D3	R91	*C3	R187	*A3	R284	*A3	R387	*C1		
C73	*A3	C172	*A3	IC35	*D1	Q75	*D3	R92	*C3	R188	*C3	R285	*A3	R388	B3		
C74	*A4	C173	*A2	IC36	*D1	Q76	*D3	R93	*C3	R189	*B4	R286	*A3	R389	*B2		
C75	*A4	C174	*A2	IC37	D4	Q77	*A2	R94	*C3	R190	*B4	R287	*A3	R390	*B3		
C76	*A4	C175	*C2	IC38	D4	Q78	*C1	R95	*C3	R191	*B3	R288	A3	R391	*A3		
C77	*A4	C176	*C3	IC39	D3			R96	*C3	R192	*B3	R289	*A3	R392	*C2		
C78	A2	C177	*C2	IC40	*D1	R1	*D3	R97	*C3	R193	*A3	R290	A3	R393	*C2		
C79	A2	C178	*C1	IC41	B4	R2	*D3	R98	C3	R194	*A3	R291	*A3	R394	*C1		
C80	*A3	C179	*D1	IC42	*D2	R3	*D3	R99	*C3	R195	*B3	R292	*A3	R395	*D3		
C81	*A3	C182	*D1			R4	*D3	R100	C3	R196	*A3	R293	A3	R396	B2		
C84	D4	C183	*C2	JR1	*C1	R5	D3	R101	*C3	R197	*A3	R294	A2	R397	C2		
C85	D3	C184	*B2	JR2	*C1	R6	D3	R102	C3	R198	*A4	R295	*A3	R398	B2		
C86	*C4	C185	*C2	JR3	*D1	R7	*D3	R103	*C3	R199	*A4	R296	A2	R399	*A2		
C87	*D2	C186	*C2	JR4	*D1	R8	*D3	R104	*C3	R200	*A4	R297	*A2	R400	*A2		
C88	*B2	C187	*D3			R9	D3	R105	*C3	R201	*A4	R298	*A2	R401	*C1		
C89	*C4	C188	*D3	L1	*B3	R10	D3	R106	C3	R202	*A3	R299	*A2	R402	*C1		
C90	*B4	C189	*C3	L2	*B2	R11	*D3	R107	*C3	R203	*A4	R300	A2	R403	*C1		
C91	*B4	C190	*C3	L5	A3	R12	*D3	R108	*C3	R204	*A3	R301	*D1	R404	*C4		
C92	*D2	C191	*C3	L6	A3	R13	*D3	R109	*C3	R205	*A3	R302	*D2	R405	*C4		
C93	B4	C192	*D3	L7	*A2	R14	*D3	R110	*C3	R206	*A3	R303	*D2	R406	*D4		
C94	B4	C193	D4	L8	*A2	R15	*D3	R111	C3	R207	*A3	R305	*D2	R407	*D1		
C95	B4	C194	D3	L10	*A2	R16	*D3	R112	*C3	R208	*A4	R306	*C2	R408	*D1		
C96	*B3	C195	*A2			R17	D3	R113	C3	R209	A3	R307	*C2	R409	B2		
C97	*B3	C196	A3	Q1	*D3	R18	D2	R114	B3	R210	A3	R308	*D1	R410	*D1		
C98	A2	CL1	A4	Q2	*D3	R19	*D2	R115	*B3	R211	A3	R309	*D2	R411	A3		
C99	B2	CL2	B4	Q3	*D3	R20	*D2	R116	C3	R212	A2	R310	*D2	R412	*D3		
C100	C2	CN1	*B3	Q4	*D3	R21	*D2	R117	B3	R213	A2	R311	*C1	R413	*D3		

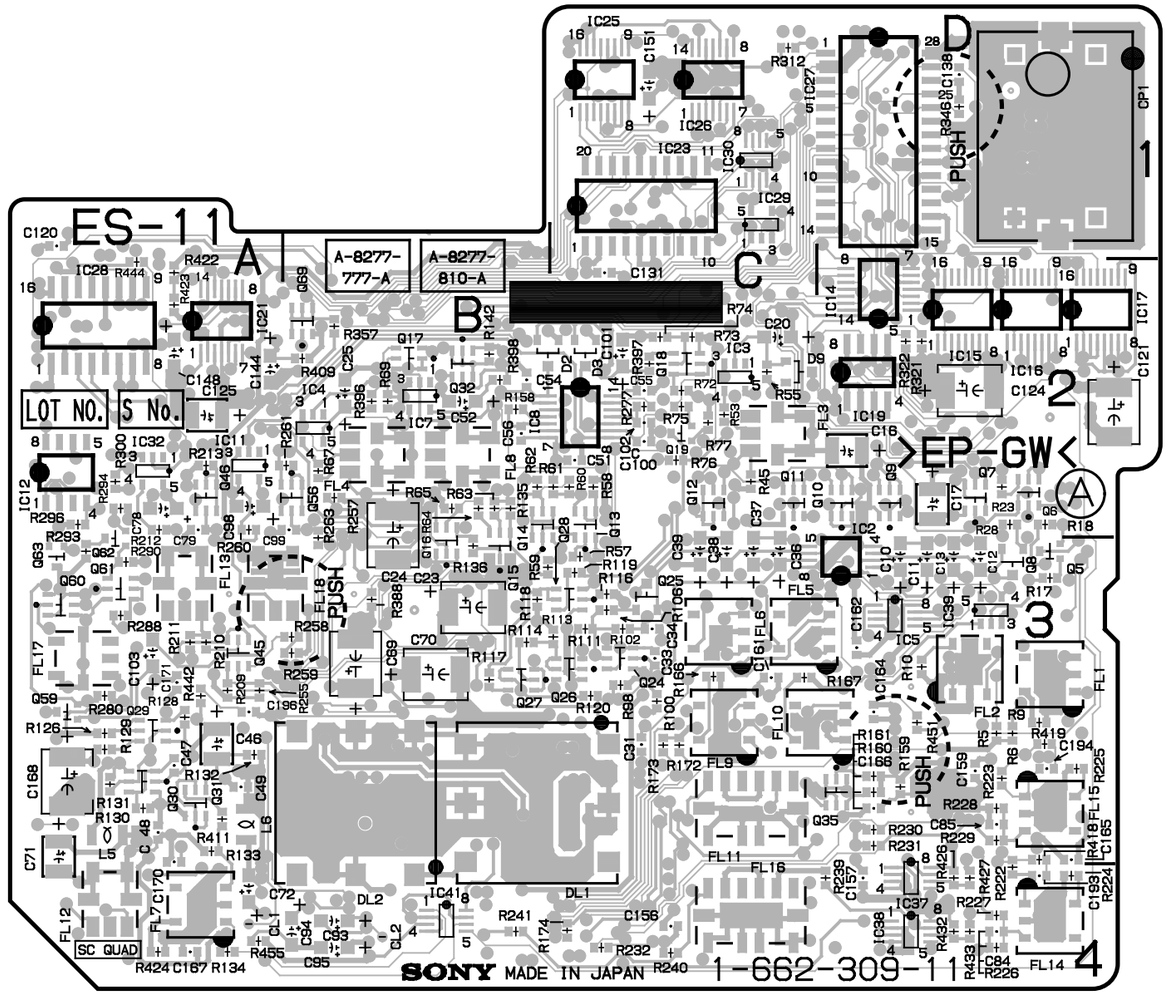

DNW-7/90/90WS(SY):S/N 10001 and Higher
DNW-7/90/90WS(J):S/N 30001 and Higher
DNW-7P/90P/90WSP(SY):S/N 40001 and Higher

ES-11 -A SIDE-
1-662-309-11

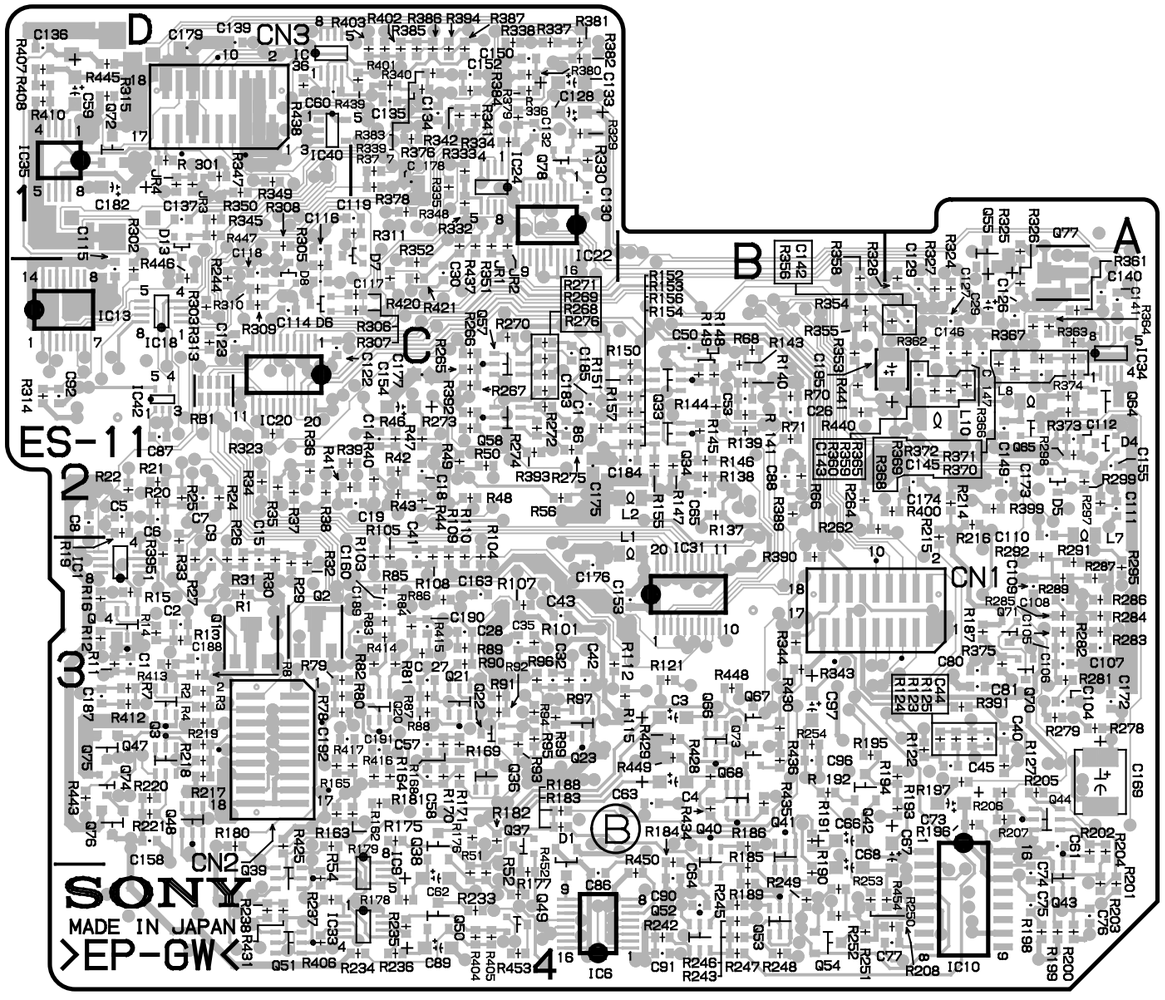

ES-11 -B SIDE-

1-662-309-11

TC-80 (1-662-324-11)
---
* : B SIDE

A103	*A2	C308	G5	C541	*F7	C802	D7	IC301	H6	Q304	F5				
A104	*A5	C309	F6	C542	G7	C803	C6	IC302	G6	Q305	F5				
		C310	F5	C543	G7	C804	C5	IC303	G6	Q306	F6				
BT801	D6	C311	F6	C544	C6	C805	D5	IC304	F6	Q307	*E6				
		C312	F5	C545	G7	C806	D5	IC305	E6	Q308	*E6				
C101	*J6	C314	*F5	C546	G7	C811	*D5	IC306	*E5	Q309	*E6				
C102	J6	C315	*F6	C547	G7	C812	D5	IC307	*D6	Q401	*G6				
C103	*K7	C316	*F5	C548	G7	C813	*D5	IC308	E7	Q402	*G6				
C104	K7	C317	*F6	C549	*C5	C814	*D5	IC402	G6	Q403	*F6				
C105	J7	C318	*F5	C550	C5	C815	*C5	IC403	G6	Q404	F6				
C106	J7	C319	E5	C551	H7	C816	*D4	IC404	F6	Q406	F6				
C107	J7	C320	E5	C552	H7	C817	D5	IC470	H7	Q501	*D3				
C108	*J7	C321	E6	C553	F7	C818	*D4	IC503	*D3	Q502	*F2				
C110	J7	C322	*E6	C559	*A5	C819	E7	IC504	D3	Q503	*H1				
C111	*K7	C350	*E6	C560	*A5	C901	A6	IC505	D3	Q504	*H1				
C112	K7	C351	*E6	C561	*B5	C902	A5	IC506	E3	Q505	*H1				
C113	J5	C352	*E6	C562	*B4	C903	B6	IC507	E2	Q507	G7				
C114	*J6	C353	*E6	C563	*B5	C904	B6	IC508	F3	Q508	F7				
C115	*H5	C354	*E6	C564	*A4	C951	*J3	IC509	F2	Q511	G7				
C116	*H5	C355	*E6	C565	*A4	C952	*J3	IC510	*H2	Q512	*C5				
C117	*H5	C356	*E6	C566	A5	CN101	*G7	IC511	G2	Q513	*B5				
C118	*H4	C357	*D6	C567	A5	CN102	*E7	IC512	D3	Q514	*C5				
C119	J4	C358	*E6	C568	*A4	CN503	F7	IC519	G7	Q602	*G3				
C120	*J4	C359	*E6	C569	D5	CN504	*C2	IC520	G7	Q603	*H2				
C121	J4	C360	*E6	C570	*A4	CN704	*K2	IC521	A4	Q604	*H2				
C122	*J4	C361	*E6	C571	*A4	CN901	*A4	IC522	*A4	Q605	*H2				
C123	G4	C362	E5	C610	E3	CN902	*A5	IC523	A4	Q701	*K1				
C125	*G4	C363	E6	C611	E3			IC524	F7	Q801	*D5				
C126	*G4	C364	E5	C614	E3	D101	*J5	IC606	E3	Q951	*J3				
C127	G4	C365	E5	C615	*D3	D102	*F4	IC607	E3	Q952	*J3				
C128	*G4	C370	*H7	C616	*D3	D201	*K5	IC609	G3						
C129	*G4	C371	*H7	C617	*E3	D202	*F5	IC610	*H3	R101	*H6				
C130	F4	C372	H7	C618	*E3	D301	*G6	IC611	G2	R102	*H6				
C131	F4	C373	*H7	C619	*E3	D302	*E6	IC701	*B6	R103	*H6				
C132	F4	C374	*H7	C620	*E3	D390	H7	IC702	*B6	R104	*H6				
C133	*F4	C390	*H7	C621	*E4	D401	*G6	IC703	E7	R105	*J6				
C134	*H6	C391	*J7	C622	*E3	D402	*E6	IC704	C5	R106	*J6				
C135	*H6	C392	H7	C623	F4	D501	*G2	IC705	D4	R107	K7				
C150	*F5	C403	G6	C624	*F4	D502	*G3	IC706	C6	R108	K7				
C151	*F4	C404	*G6	C625	*F3	D503	G7	IC708	B3	R109	K7				
C152	*F5	C405	*G6	C626	*F3	D504	G7	IC709	*C3	R110	K7				
C153	*F4	C406	*G6	C627	A4	D505	C5	IC710	C3	R111	*J7				
C154	*F5	C407	G6	C628	F3	D506	C6	IC711	*C2	R112	*J7				
C155	*E5	C408	G6	C629	*G3	D507	*C6	IC712	C3	R113	*J7				
C156	*E5	C409	F6	C630	*G3	D508	*C5	IC713	*J2	R114	*J7				
C157	*E4	C410	F6	C631	*H3	D510	*C6	IC714	*J2	R115	J7				
C158	E4	C411	F6	C632	*H2	D612	*C5	IC715	*B6	R116	J7				
C159	*E4	C412	F6	C633	*H2	D701	C5	IC716	*C4	R117	*J7				
C160	F4	C413	*F6	C634	*G2	D702	C4	IC717	C4	R118	J7				
C162	F4	C414	*F6	C635	G3	D703	*C4	IC801	*C5	R119	*K7				
C163	E5	C415	*F6	C636	*G2	D704	*D4	IC802	*D5	R120	*K7				
C164	F4	C416	*F6	C637	*G2	D705	*D4	IC803	*D5	R121	*J6				
C165	*E4	C417	*F6	C701	A4	D706	*D4	IC804	D5	R122	*H5				
C166	*E4	C418	*F6	C702	B4	D707	*D5	IC805	*D5	R123	*H6				
C167	*E4	C419	E6	C703	C5	D708	*A3	IC806	D4	R124	*H6				
C201	*K6	C420	E6	C704	*C5	D709	*K2	IC807	D4	R125	*H6				
C202	K6	C421	F6	C705	*D4	D710	*K1	IC820	E7	R126	*H6				
C203	*K7	C422	*E6	C706	C4	D711	*K1	IC901	*B7	R127	*J6				
C204	K7	C470	H7	C707	D4	D712	K1	IC902	*B7	R128	*H5				
C205	J7	C473	*H7	C708	C6	D713	C4	IC951	*K3	R129	*H5				
C206	J7	C474	*H7	C709	C6	D714	*F7	IC952	*J3	R130	*J6				
C207	J7	C502	*D3	C710	C6	D801	*D6			R131	*J6				
C208	*J7	C503	D3	C711	C6	D802	*D6	JW901	A5	R132	*J5				
C209	*J7	C504	*D3	C712	C7	D803	*D6	JW902	A5	R133	*H5				
C210	J7	C505	D3	C713	C7	D804	*C6	JW903	A5	R134	*H5				
C211	*K7	C506	*D3	C714	B3	D805	*D6	JW904	A5	R135	*J5				
C212	K7	C507	E3	C715	*A3	D806	*D6	JW905	A5	R136	*J5				
C213	K5	C510	E3	C716	*B3	D807	*D5			R137	*H5				
C214	*K6	C511	E3	C717	*B3	D810	*D5	L101	E4	R138	*J5				
C215	*J5	C514	E2	C718	*C2	D811	*C5	L502	F7	R139	*J5				
C216	*J5	C515	*	C719	C2	D813	*D4	L503	F7	R140	*J5				
C217	*J5		D3	C720	C2	D814	E7	L504	F7	R141	*J5				
C218	*J4	C516	*D3	C721	C2			L505	F7	R142	*J5				
C219	K4	C517	*E3	C722	*K1	E102	*G4	L506	A5	R143	*J5				
C220	*K4	C518	*E3	C723	*K1	E202	*G5	L701	A6	R144	*J5				
C221	K4	C519	*E3	C724	A6	E501	*E3	LCD701	J2	R145	*J4				
C222	*K4	C520	*E3	C725	B6	E502	*E4			R146	*J4				
C223	G5	C521	*E3	C726	B6	E801	*C5	Q101	*J5	R147	*H4				
C224	*G4	C522	*E3	C727	A6			Q102	*J4	R148	*H4				
C225	*G5	C523	F3	C728	B6	IC101	H6	Q103	*H4	R149	*J4				
C226	*G5	C524	*F3	C729	*J1	IC102	*K7	Q104	J4	R150	*J4				
C227	G4	C525	*F2	C730	*J1	IC103	*J7	Q105	*J4	R151	*J4				
C228	*G5	C526	*F3	C731	B6	IC104	H5	Q106	*J4	R152	J4				
C229	*G5	C527	*F2	C732	*D3	IC105	H5	Q107	J4	R153	*G4				
C230	F5	C528	F2	C733	B6	IC106	H4	Q108	*F4	R154	*F4				
C231	F5	C529	*F2	C734	*C4	IC107	G4	Q109	*G4	R155	*F4				
C232	F5	C530	*F2	C735	*J2	IC108	F4	Q201	*K5	R156	*G4				
C233	*F5	C531	*G1	C736	E7	IC109	E5	Q202	*K4	R157	*G4				
C234	*J6	C532	*H1	C737	C5	IC110	*E4	Q203	*J4	R158	*G4				
C235	*J6	C533	*H1	C738	C5	IC111	*E5	Q204	K4	R159	*G4				
C301	H6	C534	*G1	C739	B4	IC201	J6	Q205	*K4	R160	*G4				
C302	H6	C535	F2	C740	B4	IC202	*K7	Q206	*K4	R161	*G4				
C303	H5	C536	*G2	C741	C5	IC203	*J7	Q207	K4	R162	G4				
C304	*G6	C537	*G2	C742	C5	IC204	K5	Q209	*G4	R163	*G4				
C305	*G5	C538	F7	C743	D7	IC205	J5	Q301	*G5	R164	G4				
C306	*G6	C539	F7	C745	K1	IC206	J4	Q302	*G5	R165	*G4				
C307	G6	C540	F6	C801	D6	IC207	G5	Q303	*F6	R166	*F4				

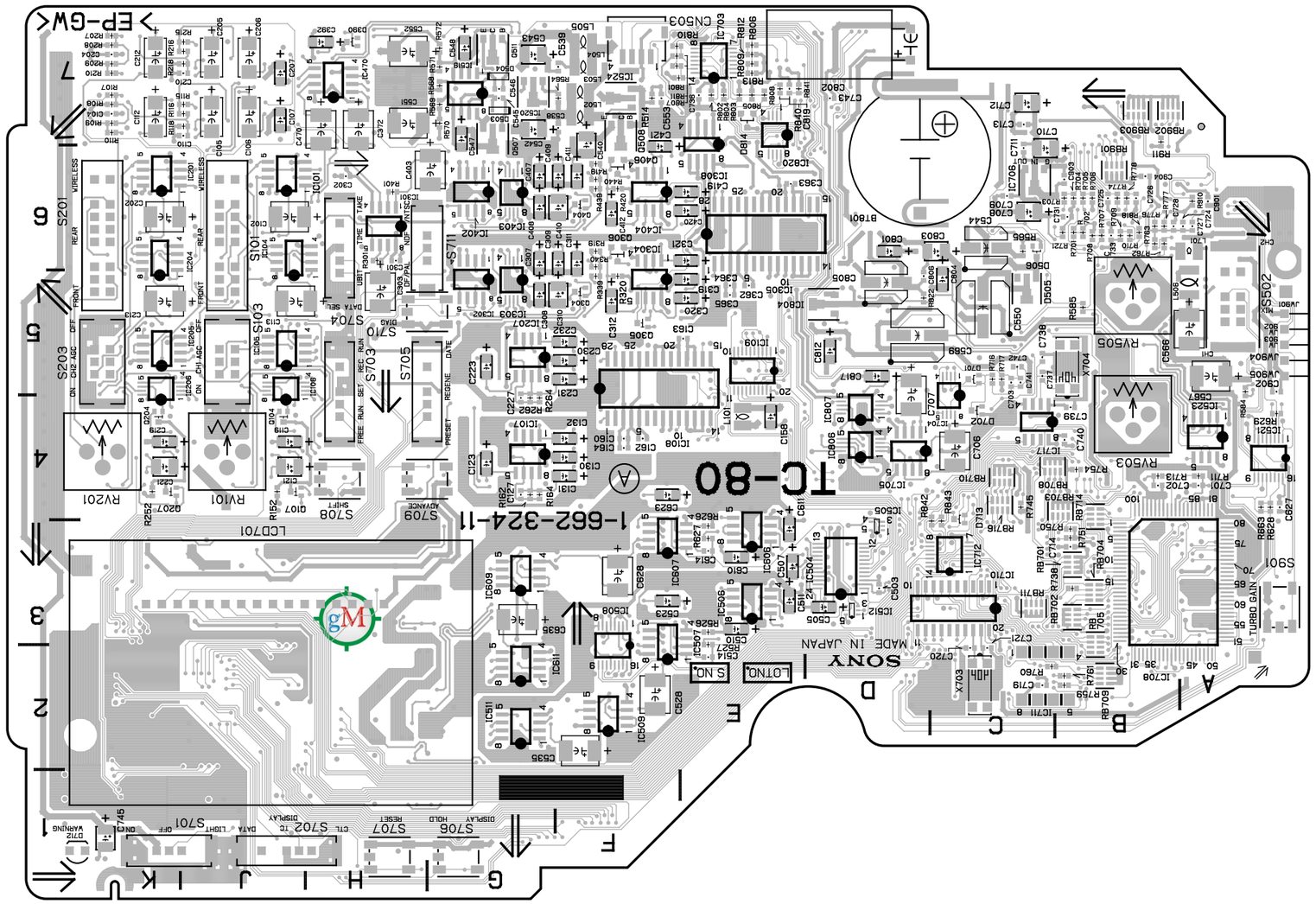

DNV-5(SY):S/N 10001 and Higher
DNV-5(J):S/N 30001 and Higher
DNW-7/90/90WS(SY):S/N 10001 and Higher
DNW-7/90/90WS(J):S/N 30001 and Higher
DNW-7P/90P/90WSP(SY):S/N 40001 and Higher

TC-80 -A SIDE-
1-662-324-11

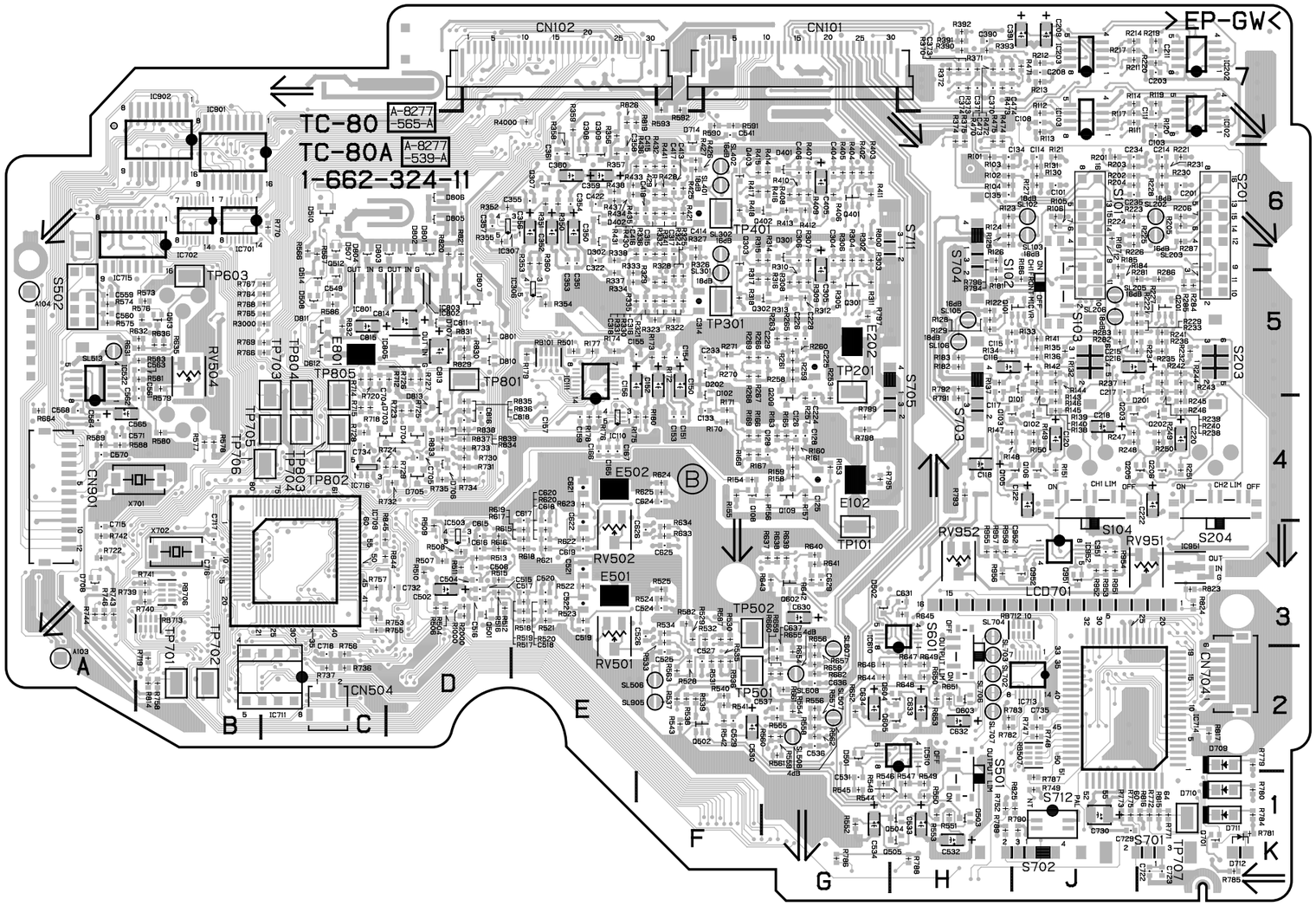

TC-80 -B SIDE-
1-662-324-11

R167	* F4	R302	* G6	R440	F6	R593	* F7	R748	* J2	R911	B7	TP701	* B2		
R168	* F4	R303	* G6	R441	* F6	R615	* D3	R749	* J1	R951	* J3	TP702	* B2		
R169	* F4	R304	* G6	R470	* H7	R616	* D3	R750	B3	R952	* J3	TP703	* C4		
R170	* F4	R305	* G5	R471	* J7	R617	* E3	R751	B3	R953	* J3	TP704	* C4		
R171	* F4	R306	* G6	R472	* H7	R618	* E3	R752	* H1	R954	* J3	TP705	* C4		
R172	* F5	R307	* G6	R473	* H7	R619	* E3	R753	* C3	R955	* H3	TP706	* C4		
R173	* F5	R308	* G5	R474	* H7	R620	* E3	R754	B4	R956	* H3	TP707	* K1		
R174	* E5	R309	* G5	R475	* H7	R621	* E3	R755	* C3	R957	* H3	TP801	* D5		
R175	* E4	R310	* G5	R501	* E5	R622	* E3	R756	* C2	R958	* H3	TP802	* C4		
R176	* E4	R311	* G5	R504	* D3	R623	* E4	R757	* C3	R1000	* D3	TP803	* C4		
R177	* E5	R312	* G5	R506	* D3	R624	* F4	R758	* B2	R2000	* D3	TP804	* C4		
R178	* E4	R313	* G5	R507	* D3	R625	* F4	R759	B2	R3000	* C5	TP805	* C4		
R179	* E5	R314	* G6	R508	* D3	R626	E3	R760	C2	R4000	* E7				
R180	* F4	R315	* F6	R509	* D3	R627	E3	R761	B2	RB101	* E5	X701	* B4		
R181	* H5	R316	* G5	R510	* D3	R628	A4	R762	B6	RB507	* J2	X702	* B3		
R182	* H5	R317	* F5	R511	* D3	R629	A4	R763	B6	RB701	B3	X703	C2		
R183	* H5	R318	* F5	R512	* D3	R631	* B5	R764	* C5	RB702	B3	X704	B5		
R184	* J5	R319	F6	R513	* D3	R632	* B5	R765	* C5	RB703	B4				
R185	* J6	R320	F5	R514	F7	R633	* F3	R766	* C5	RB704	B3				
R186	* J5	R321	* F5	R515	* D3	R634	* F3	R767	* C5	RB705	B2				
R187	* J6	R322	* F5	R516	* D3	R635	* B5	R768	* C5	RB706	* B3				
R201	* J6	R323	* F5	R517	* E3	R636	* B5	R769	* C5	RB708	C4				
R202	* J6	R324	* F5	R518	* E3	R637	* G3	R770	* C6	RB709	B2				
R203	* J6	R325	* F5	R519	* E3	R638	* G3	R771	* K1	RB710	C4				
R204	* J6	R326	* F6	R520	* E3	R639	* G3	R772	* K1	RB711	C3				
R205	* K6	R327	* F6	R521	* E3	R640	* G3	R773	* J1	RB712	* J3				
R206	* K6	R328	* F5	R522	* E3	R641	* G3	R774	B6	RB713	* B3				
R207	K7	R329	* F5	R523	* E3	R642	* G3	R775	* J1	RB714	B4				
R208	K7	R330	* F5	R524	* F3	R643	* G3	R776	B6	RB716	C4				
R209	K7	R331	* F5	R525	* F3	R644	* G2	R777	B6	RB901	B6				
R210	K7	R332	* F6	R526	E3	R645	* H3	R778	B6	RB902	B7				
R211	* J7	R333	* E5	R527	E2	R646	* G2	R779	* K2	RB903	B7				
R212	* J7	R334	* E5	R528	* F2	R647	* H2	R780	* K1	RV101	J4				
R213	* J7	R335	* E5	R529	* F3	R648	* H2	R781	* K1	RV201	K4				
R214	* J7	R336	* E6	R530	* F3	R649	* H2	R782	* H2	RV501	* E3				
R215	J7	R337	* E5	R531	* F2	R650	* H2	R783	* H2	RV502	* E3				
R216	J7	R338	* E6	R532	* F3	R651	* H2	R784	* K1	RV503	B4				
R217	* J7	R339	F5	R533	* F3	R652	* G2	R785	* K1	RV504	* B5				
R218	J7	R340	F6	R534	* F3	R653	* H2	R786	* G1	RV505	B5				
R219	* K7	R341	* F6	R535	* F2	R654	* G2	R787	* J1	RV951	* K3				
R220	* K7	R350	* E6	R536	* F2	R655	* G2	R788	* H1	RV952	* H3				
R221	* K6	R351	* E6	R537	* F2	R656	* G2	R789	* H1						
R222	* J5	R352	* D6	R538	* F2	R657	* G2	R790	* J1	S101	J6				
R223	* J6	R353	* E6	R539	* F2	R658	* G2	R791	* H4	S102	* J5				
R224	* J6	R354	* E5	R540	* F2	R659	* G2	R792	* H5	S103	J5				
R225	* J6	R355	* D6	R541	* F2	R660	* G2	R793	* H4	S104	* J4				
R226	* J6	R356	* E7	R542	* F2	R661	* G2	R794	* H5	S201	K6				
R227	* J5	R357	* E6	R543	* F2	R662	* G2	R795	* G4	S203	K5				
R228	* K6	R358	* E6	R544	* G1	R663	A4	R796	* H6	S204	* K4				
R229	* J5	R359	* E7	R545	* G1	R664	* A4	R797	* G5	S501	* H1				
R230	* K6	R360	* E6	R546	* G1	R701	B6	R798	* G4	S502	A5				
R231	* K6	R370	* H7	R547	* H1	R702	B6	R799	* G4	S601	* H2				
R232	* K5	R371	* H7	R548	* H1	R703	B6	R800	* G6	S701	K1				
R233	* J5	R372	* H7	R549	* H1	R704	B6	R801	F7	S702	J1				
R234	* J5	R373	* H7	R550	* H1	R705	B6	R802	E7	S703	H5				
R235	* K5	R374	* H7	R551	* H1	R706	B6	R803	E7	S704	H6				
R236	* K5	R375	* H7	R552	* G1	R707	B6	R804	E7	S705	G5				
R237	* J5	R390	* H7	R553	* H1	R708	B6	R805	E7	S706	G1				
R238	* K5	R391	* H7	R554	* G2	R709	B6	R806	E7	S707	H1				
R239	* K5	R392	* H7	R555	* G2	R710	B6	R807	F7	S708	H4				
R240	* K5	R393	* H7	R556	* G2	R711	A4	R808	E7	S709	G4				
R241	* K5	R401	H6	R557	* G2	R712	* D5	R809	E7	S710	G5				
R242	* K5	R402	* G6	R558	* G2	R713	B4	R810	F7	S711	G6				
R243	* K5	R403	* G6	R559	* G2	R714	* C5	R811	F7	S712	* J1				
R244	* K5	R404	* G6	R560	* G2	R715	* C4	R812	E7	S901	A3				
R245	* K4	R405	* G6	R561	* G2	R716	C5	R813	E7	SL102	* J6				
R246	* K4	R406	* G6	R562	* G2	R717	C5	R814	* B2	SL103	* J6				
R247	* J4	R407	* G6	R563	* F2	R718	* C4	R815	* K1	SL105	* H5				
R248	* J4	R408	* G6	R564	F7	R719	* B2	R816	* K1	SL106	* H5				
R249	* K4	R409	* G6	R565	C6	R720	* C5	R817	* K2	SL202	* K6				
R250	* K4	R410	* G6	R566	* C6	R721	B6	R818	B6	SL203	* K6				
R251	* K4	R411	* G6	R567	* C6	R722	* A3	R819	* E7	SL205	* J5				
R252	K4	R412	* G6	R568	G7	R723	* D4	R820	* D6	SL206	* J5				
R253	* G4	R413	* G6	R569	G7	R724	* C4	R821	* D6	SL301	* F5				
R257	* G4	R414	* G6	R570	G7	R725	* D4	R822	D5	SL302	* F6				
R258	* G5	R415	* F6	R571	G7	R726	* D5	R823	* K3	SL401	* F6				
R259	* G5	R416	* G6	R572	G7	R727	* D5	R824	* K3	SL402	* F6				
R260	* G5	R417	* F6	R573	* B5	R728	* C4	R825	* J1	SL506	* F2				
R261	* G5	R418	* F6	R574	* A5	R729	* D4	R826	* E7	SL507	* G2				
R262	G4	R419	F6	R575	* A5	R730	* D4	R829	* D5	SL508	* G2				
R263	* G5	R420	F6	R576	* B5	R731	* D4	R830	* D5	SL513	* A5				
R264	G4	R421	* F6	R577	* B4	R732	* D4	R831	* D5	SL607	* G2				
R265	* G5	R425	* F6	R578	* B4	R733	* D4	R832	* C5	SL608	* G2				
R266	* F5	R426	* F6	R579	* B5	R734	* D4	R833	* D4	SL702	* H2				
R267	* F5	R427	* F6	R580	* B4	R735	* D4	R834	* D4	SL703	* H2				
R268	* F5	R428	* F6	R581	* B5	R736	* C2	R835	* D4	SL704	* H3				
R269	* F5	R429	* F6	R582	* F3	R737	* C2	R836	* D4	SL706	* H2				
R270	* F5	R430	* F6	R583	* B5	R738	B3	R837	* D4	SL707	* H2				
R271	* F5	R431	* F6	R584	A5	R739	* B3	R838	* D4	SL905	* F2				
R281	* J5	R432	* F6	R585	B5	R740	* B3	R839	* D4						
R282	* J5	R433	* E6	R586	* C5	R741	* B3	R840	E7	TP101	* G3				
R283	* J5	R434	* E6	R587	* F3	R742	* A3	R841	E7	TP201	* G5				
R284	* K5	R435	* E6	R588	* A4	R743	* A3	R842	C3	TP301	* F5				
R285	* K5	R436	* E6	R589	* A4	R744	* A3	R843	C3	TP401	* F6				
R286	* K5	R437	* E6	R590	* F7	R745	C4	R844	* C3	TP501	* F2				
R287	* K6	R438	* E6	R591	* F7	R746	* A3	R845	* C3	TP502	* F3				
R301	H6	R439	F6	R592	* F7	R747	* J2	R910	A6	TP603	* B5				

MDC-5 (1-662-336-11)
---
* : B SIDE

C100	D1	C329	E5	IC103	D5	R108	B2	R249	F6	R539	H5
C101	E8	C500	G3	IC104	F7	R109	D6	R300	F7	R540	H6
C102	D5	C501	G3	IC105	E6	R110	D6	R301	E7	R541	H6
C103	A2	C502	G3	IC106	D7	R111	D2	R302	G1	R542	H6
C104	D6	C503	G4	IC107	E6	R112	D2	R303	G1	R543	H5
C105	E7	C504	G3	IC108	F6	R113	D6	R304	G1	R544	H5
C106	F7	C505	G3	IC109	F5	R114	D6	R305	G1	R545	H6
C107	E7	C506	G3	IC112	H2	R115	D2	R306	D4	R546	H6
C108	E8	C507	H3	IC114	H6	R116	D5	R307	G3	R547	H6
C109	F8	C508	H3	IC116	D2	R117	D5	R308	J6	R548	H6
C110	D5	C509	J4	IC117	D7	R118	D2	R309	F6	RB100	F7
C111	D5	C510	J5	IC118	G2	R119	E7	R310	F3	RB101	F7
C112	D5	C511	H4	IC119	F2	R120	D5	R311	D4	RB102	E4
C113	F7	C512	F3	IC120	D2	R121	D6	R312	D4	RB103	G3
C114	D5	C513	H4	IC121	H2	R122	D6	R313	B6	RB104	D3
C115	D6	C514	J5	IC122	D3	R123	D7	R314	B6	RB105	E3
C116	D6	C515	F3	IC124	D3	R124	D6	R315	A3	RB106	G3
C117	D6	C516	F3	IC125	G2	R125	D6	R316	B3	RB107	G2
C118	D6	C517	F3	IC126	F7	R126	D7	R317	C2	RB108	G1
C119	D7	C518	E3	IC300	D4	R127	H2	R318	B3	RB109	J2
C120	D7	C519	F3	IC301	B4	R128	E6	R319	A3	RB110	J2
C121	E6	C520	F3	IC302	C2	R129	D7	R320	C2	RB111	E8
C122	E6	C521	F3	IC303	B5	R131	G2	R321	C2	RB112	D3
C123	D6	C522	H3	IC304	B5	R132	H2	R322	B2	RB113	D3
C124	D6	C523	H3	IC305	B5	R133	F6	R323	B2	RB114	G1
C125	H2	C524	H6	IC500	G3	R134	D7	R324	A4	RB115	C2
C126	E6	C526	H4	IC501	G3	R135	E6	R325	B2	RB116	C2
C127	G2	C528	H4	IC502	G4	R136	F6	R326	A4	RB300	F6
C128	H2	C529	H5	IC503	J3	R137	G2	R327	B2	RB301	G1
C129	E6	C530	G3	IC504	F3	R138	F6	R328	B2	RB302	C2
C130	E6	C532	H4	IC505	F3	R139	E6	R329	A3	RB303	G1
C131	G2	CL100	E8	IC507	H3	R140	F6	R330	C3	RV100	* C2
C132	E6	CL101	F8	IC510	H6	R141	D7	R331	C3		
C133	D7	CL102	E8	IC511	H6	R142	D6	R332	A4	S100	* F5
C134	D7	CL103	F8	IC512	H5	R143	E6	R333	A4	S101	* F1
C135	E6	CL104	F8			R144	F6	R334	A4	S102	* F1
C136	E6	CL105	E8	L100	E8	R145	E6	R335	C3	S103	* F4
C137	D6	CL106	F8	L101	F8	R146	E6	R336	C3	S104	* F4
C138	F6	CL107	E7	L105	E7	R147	D7	R337	A5	S105	* F4
C139	F5	CL108	B2	L106	D7	R148	E6	R338	B4	S106	* F5
C140	H2	CL109	F6	L107	D7	R149	D6	R339	A5	S107	* F4
C147	G6	CL110	F6	L300	C3	R150	E6	R340	A5	S108	* D2
C150	G6	CL111	F5	L500	J4	R151	F6	R341	B5	S109	* C2
C153	G2	CL112	G7	L501	H4	R152	D6	R342	B5	S110	* C2
C155	J3	CL113	D3	L502	J5	R153	F6	R343	A3	S111	H2
C157	J2	CL114	D3			R154	F6	R344	B5	S300	G1
C160	H2	CL115	E3	PD300	* F7	R155	F6	R345	A3	SL100	F4
C166	D2	CL116	E3	PD301	* E6	R156	D6	R346	A5	SL102	E4
C175	D2	CL117	D2	PD302	* E7	R157	F1	R347	A5	SL103	F2
C176	E3	CL118	D2	PD303	* E7	R158	F6	R348	B6	SL300	A4
C177	E2	CL119	F8	PD304	* F2	R159	F5	R349	D4		
C178	D2	CL120	D7	PD305	* F6	R160	H3	R350	D4	TP100	D5
C179	E2	CL121	D8	PD306	* J6	R161	F6	R351	D4	TP101	* A3
C180	E7	CL122	F8			R162	F5	R352	A4	TP102	* A4
C181	E7	CN5	E8	Q107	F7	R163	F1	R353	D3	TP103	F1
C182	D2	CN501	* B8	Q108	E7	R164	H3	R354	D5	TP104	E1
C183	G6	CN502	C6	Q109	F7	R165	F4	R355	D5	TP105	* A4
C184	D7	CN503	E4	Q110	F6	R166	F4	R500	G3	TP106	* A4
C185	F2	CN504	E5	Q300	F6	R167	H2	R501	G3	TP107	F1
C186	F2	CN505	* A3	Q301	F6	R168	G3	R502	F3	TP108	F1
C187	F2	CN507	H1	Q302	G6	R169	G3	R503	G3	TP109	D1
C188	G2	CN508	* D8	Q303	G6	R170	G3	R504	G3	TP110	F1
C189	C2	CN509	* D1	Q304	D5	R182	G6	R505	G3	TP111	D1
C190	D7	CN510	* A2	Q305	D5	R183	G6	R506	G3	TP112	D1
C191	F5	CN511	* A5	Q306	J6	R190	H3	R507	G3	TP113	E2
C192	F5	CN512	* D4	Q307	F6	R191	H3	R508	G3	TP114	E2
C193	F2	CT300	B3	Q308	F3	R196	H2	R509	H4	TP300	E1
C300	D4			Q309	B6	R209	D2	R510	H3	TP301	E1
C301	D4	D102	F2	Q310	B6	R211	D3	R511	J4	TP302	D2
C302	D4	D103	* C2	Q311	A5	R214	H4	R512	J3		
C303	D4	D104	* C2	Q312	C2	R215	H3	R513	F3	X100	J2
C304	D4	D105	* D2	Q313	C2	R219	D2	R514	F3	X101	E2
C305	D4	D106	* C2	Q314	A4	R220	E2	R515	F3		
C306	C2	D107	* C2	Q315	A4	R221	D2	R516	F3		
C307	A4	D108	* D2	Q316	C2	R222	D2	R517	F3		
C308	B4	D300	* C1	Q317	C3	R223	E2	R518	F3		
C309	B2	D301	* C1	Q318	C3	R224	E2	R519	F3		
C310	C2	D302	* C1	Q319	B6	R225	D2	R520	F3		
C311	C3	D303	* C1	Q320	C2	R226	D7	R521	F3		
C312	C3	D304	D5	Q321	A4	R227	D7	R522	H4		
C313	A4	D305	G1	Q322	A4	R230	D7	R523	H3		
C314	C3	D306	C2	Q323	A4	R231	D7	R524	H4		
C315	A4	D307	C2	Q324	D5	R232	F2	R525	H3		
C316	A5	D308	A4	Q325	D5	R233	F2	R526	F3		
C317	A5	D500	J3	Q326	D5	R234	F2	R527	F3		
C318	C3	D501	J3	Q500	G3	R235	G2	R528	F3		
C319	C3	D502	H3	Q501	F3	R236	H2	R529	F3		
C320	A5	D503	H3			R237	F2	R530	G3		
C321	B4			R100	B2	R238	J2	R531	J4		
C322	A5	EP100	F4	R101	B2	R239	G2	R532	J4		
C323	B3	EP101	* A4	R102	B2	R240	J2	R533	H4		
C324	B3	EP102	F2	R103	B2	R241	C2	R534	H4		
C325	E4			R104	B2	R242	C2	R535	G3		
C326	A5	IC100	D6	R105	B2	R246	E7	R536	H5		
C327	B5	IC101	B2	R106	D6	R247	E7	R537	H5		
C328	D5	IC102	D6	R107	D6	R248	E7	R538	H6		

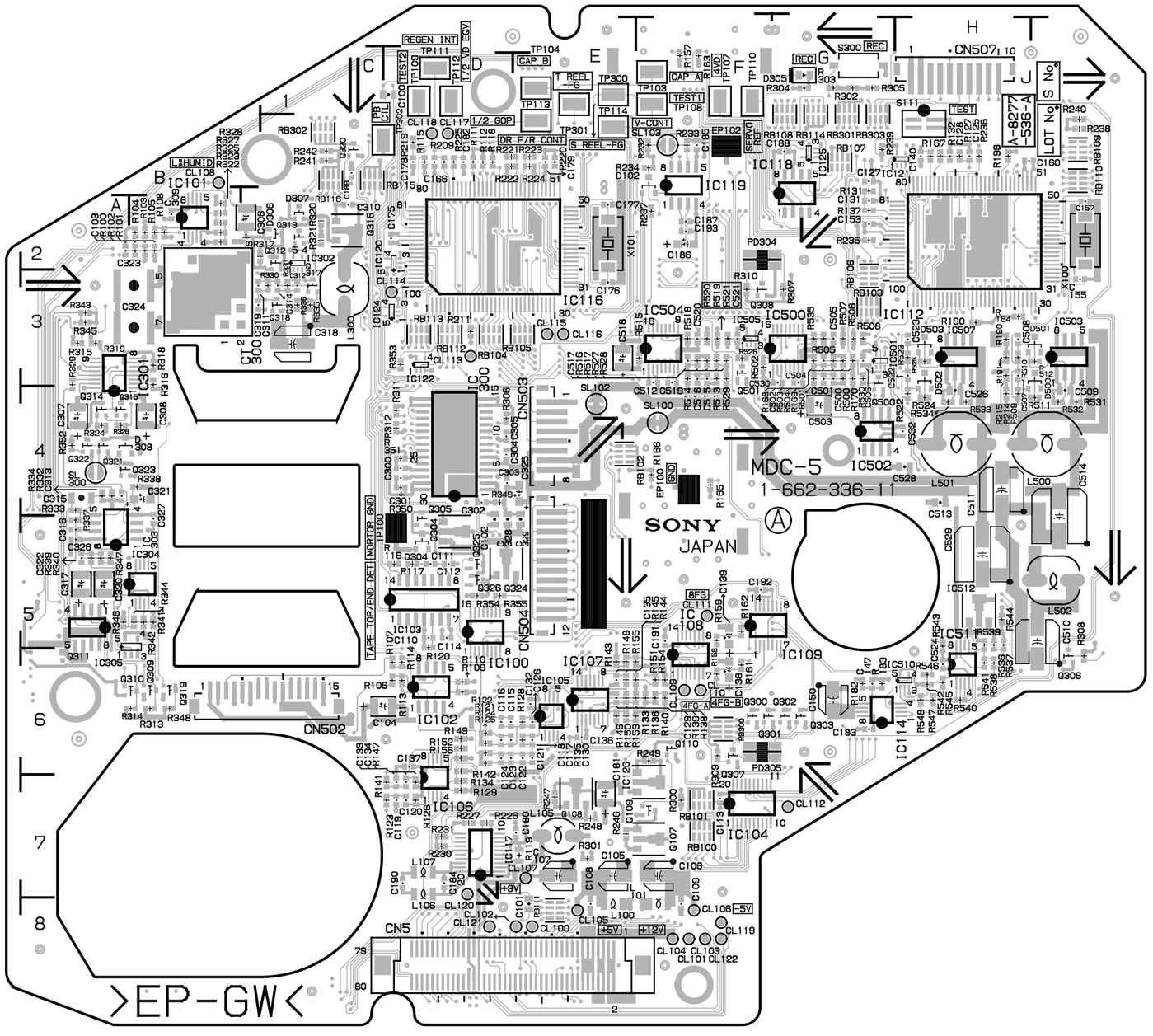

DNV-5(SY):S/N 10001 and Higher
DNV-5(J):S/N 30001 and Higher
DNW-7/90/90WS(SY):S/N 10001 and Higher
DNW-7/90/90WS(J):S/N 30001 and Higher
DNW-7P/90P/90WSP(SY):S/N 40001 and Higher

MDC-5 -A SIDE-
1-662-336-11

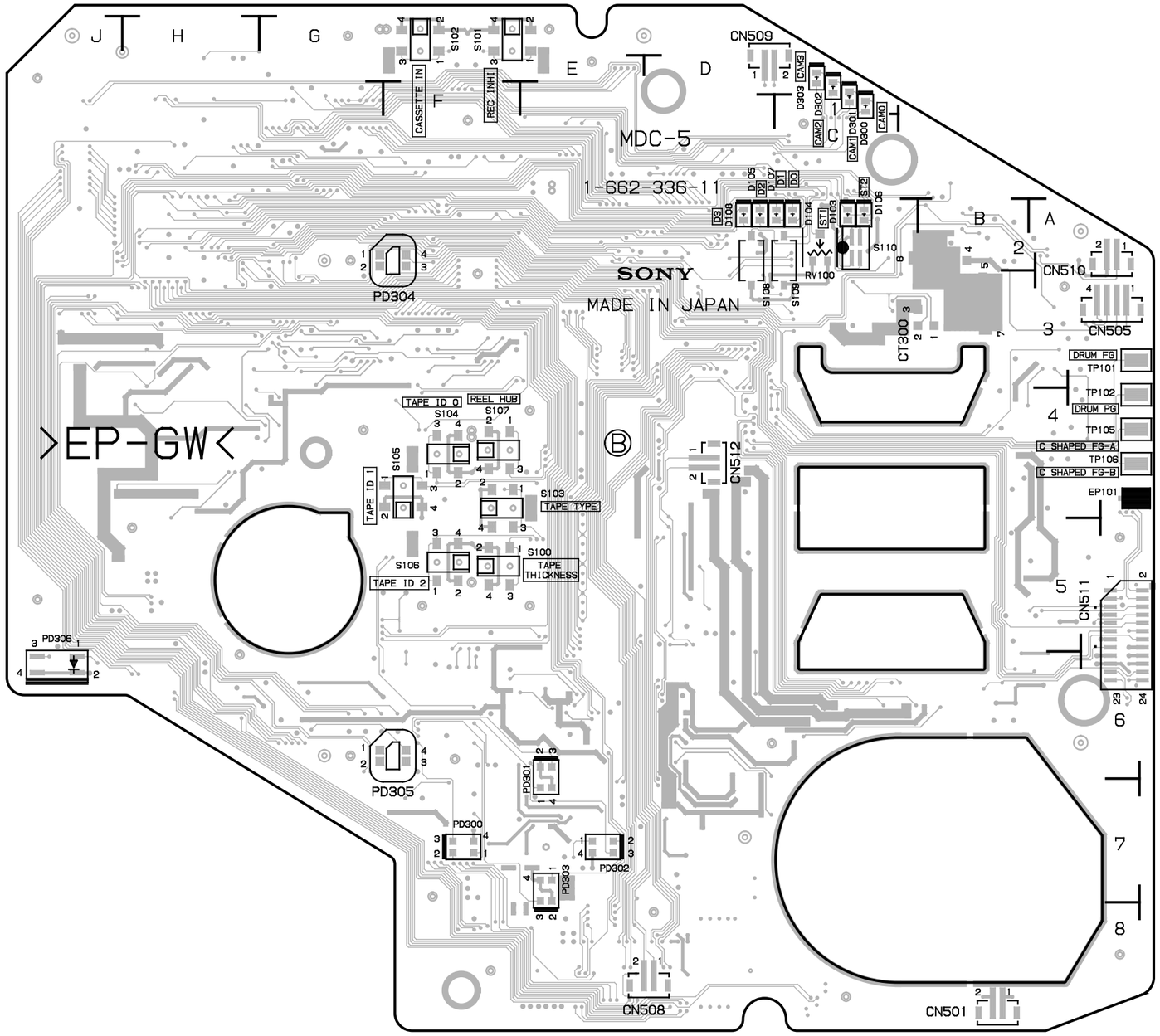

MDC-5 -B SIDE-
1-662-336-11

PA-203 (1-662-477-12)
---
* : B SIDE

C1 *B1
C100 A1
C101 A2
C102 *B2
C103 *A2
C104 *A1
C105 *A2
C106 B1
C107 B1
C108 *B1
C109 *B2
C110 *B2
C111 *B1
C112 *B2
C113 *A2
C114 B2
C115 *B2
C116 B2
CN1 A2
CN125 B2
CN133 B2

D100 *B1
D101 *B1
D102 *B2
D103 *B1

IC100 *A2
IC101 *B2
IC102 *B2

L100 B2
L101 B2

Q100 B2
Q101 B1
Q102 *A2

R100 *B2
R101 *B2
R102 *B1
R103 *A2
R104 *A2
R105 *A2
R106 *A2
R107 *B1
R108 *B1
R109 *B2
R110 *B2
R111 *B2
R112 *A2
R113 *A2
R114 *B2
R115 *A1
R116 *B2

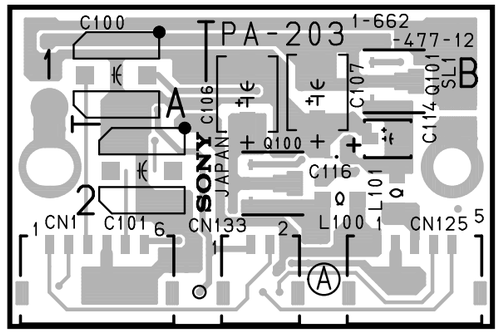

DNV-5(SY):S/N 10001 and Higher
DNV-5(J):S/N 30001 and Higher

PA-203 -A SIDE-
1-662-477-12

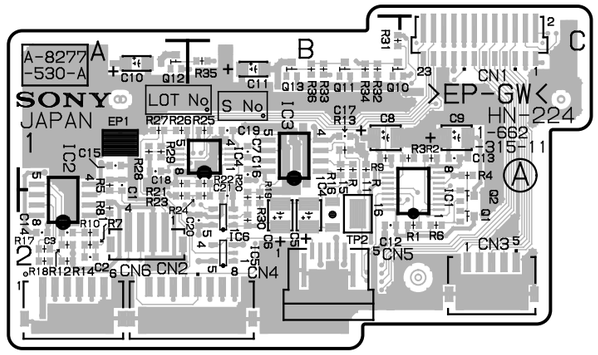

DNV-5(SY):S/N 10001 and Higher
DNV-5(J):S/N 30001 and Higher
DNW-7/90/90WS(SY):S/N 10001 and Higher
DNW-7/90/90WS(J):S/N 30001 and Higher
DNW-7P/90P/90WSP(SY):S/N 40001 and Higher

HN-224 -A SIDE-
1-662-315-11

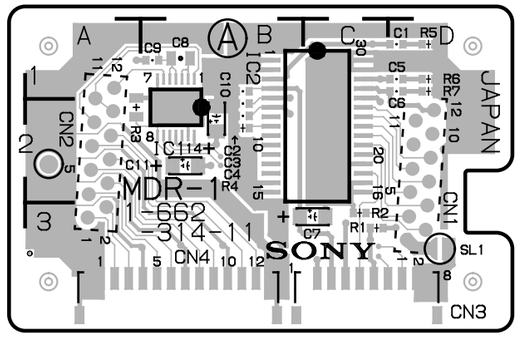

DNV-5(SY):S/N 10001 and Higher
DNV-5(J):S/N 30001 and Higher
DNW-7/90/90WS(SY):S/N 10001 and Higher
DNW-7/90/90WS(J):S/N 30001 and Higher
DNW-7P/90P/90WSP(SY):S/N 40001 and Higher

MDR-1 -A SIDE-
1-662-314-11

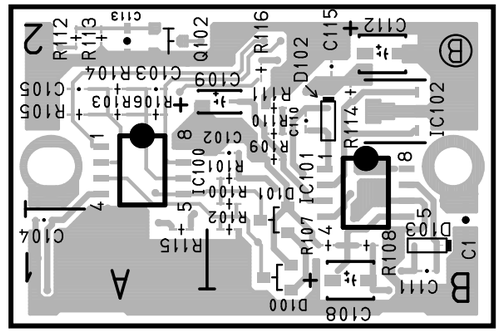

PA-203 -B SIDE-
1-662-477-12

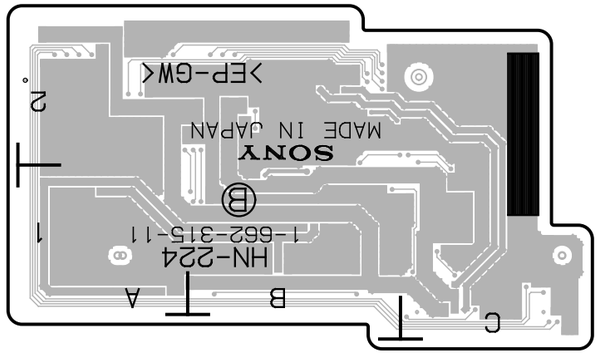

HN-224 -B SIDE-
1-662-315-11

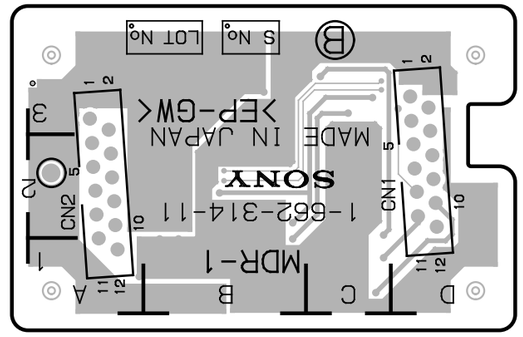

MDR-1 -B SIDE-
1-662-314-11

http://getMANUAL.com
AIF-8, MA-68, SW-789

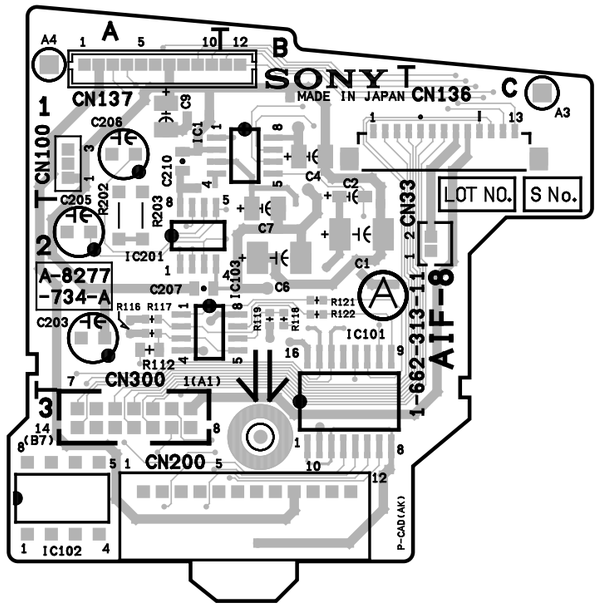

DNW-7/90/90WS(SY):S/N 10001 and Higher
DNW-7/90/90WS(J):S/N 30001 and Higher
DNW-7P/90P/90WSP(SY):S/N 40001 and Higher

AIF-8 -A SIDE-
1-662-313-11

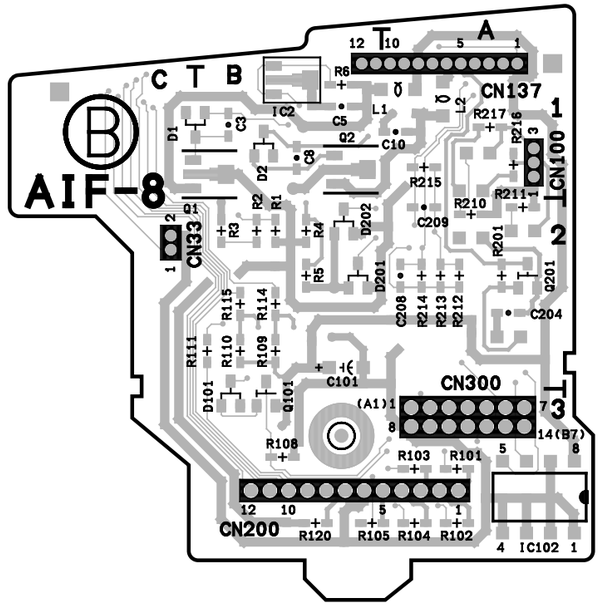

AIF-8 -B SIDE-
1-662-313-11

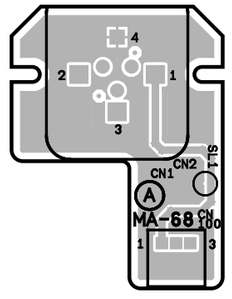

MA-68 - ASIDE-
1-662-329-11

DNW-7/90/90WS(SY):S/N 10001 and Higher
DNW-7/90/90WS(J):S/N 30001 and Higher
DNW-7P/90P/90WSP(SY):S/N 40001 and Higher

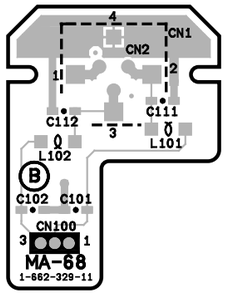

MA-68 - BSIDE-
1-662-329-11

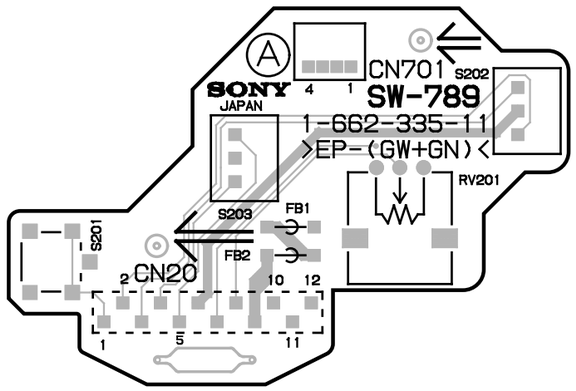

DNW-7/90/90WS(SY):S/N 10001 and Higher
DNW-7/90/90WS(J):S/N 30001 and Higher
DNW-7P/90P/90WSP(SY):S/N 40001 and Higher

SW-789 - ASIDE-
1-622-335-11

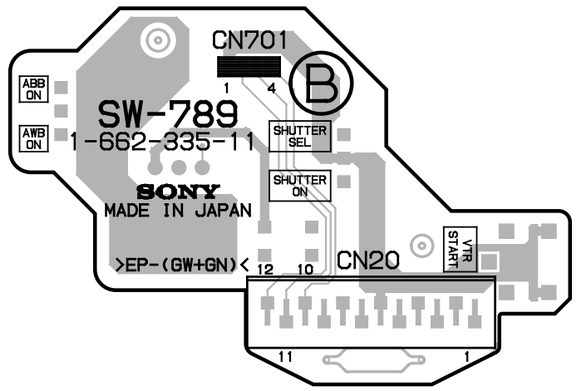

SW-789 - BSIDE-
1-622-335-11

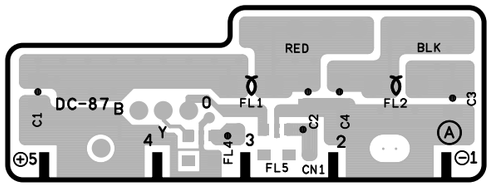

DNV-5(SY):S/N 10001 and Higher
DNV-5(J):S/N 30001 and Higher
DNW-7/90/90WS(SY):S/N 10001 and Higher
DNW-7/90/90WS(J):S/N 30001 and Higher
DNW-7P/90P/90WSP(SY):S/N 40001 and Higher

DC-87 -A SIDE-
1-662-332-12

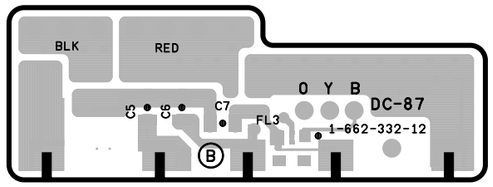

DC-87 -B SIDE-
1-662-332-12

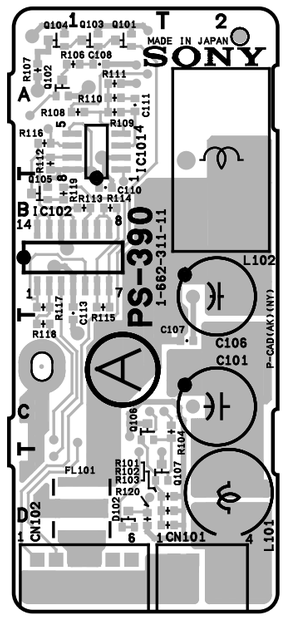

PS-390 -A SIDE-
1-662-311-11

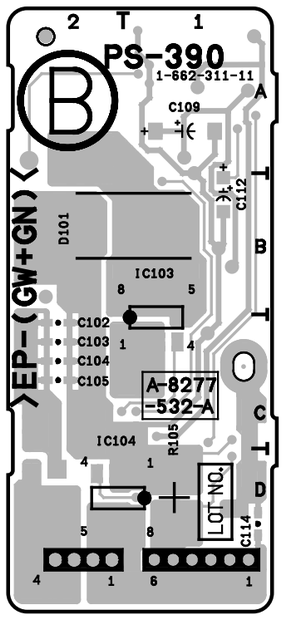

PS-390 -B SIDE-
1-662-311-11

DNV-5(SY):S/N 10001 and Higher
DNV-5(J):S/N 30001 and Higher
DNW-7/90/90WS(SY):S/N 10001 and Higher
DNW-7/90/90WS(J):S/N 30001 and Higher
DNW-7P/90P/90WSP(SY):S/N 40001 and Higher

RE-118 (1-662-325-11)
---
* : B SIDE

C1	B1	R100	*D2
C2	*B1	R101	*D1
C3	D1	R102	*D1
C4	D1	R103	D2
C5	*D2	R104	D2
C6	D2	R105	*D2
C7	C1	R106	*D2
C8	*C2	R107	*D1
C9	*B2	R200	*D2
C10	*C2	R201	*D1
C100	D1	R202	*D1
C101	D2	R203	D2
C11	C2	R204	D2
C12	B1	R205	D1
C13	*B1	R206	*D1
C14	*B2	R301	*C2
C15	B2	R302	*C1
C16	A1	R304	*C1
C17	A1	R305	B2
C18	*A2	R306	B2
C19	A2	R307	B2
C20	A1	R308	B2
C200	D1	R309	B2
C201	D2	R401	*C2
C301	C1	R402	*C1
C302	B2	R403	*C1
C401	C1	R404	*C1
C402	C2	R405	C2
C500	A1	R406	C2
C501	A2	R407	C1
C600	A1	R408	C1
C601	A2	R409	C1
C700	B1	R500	*A2
C702	B2	R501	*A1
CN1	C2	R502	*A1
CN2	A2	R503	*A1
		R504	A2
IC1	*B2	R505	A2
IC2	D2	R506	*A2
IC3	C2	R507	*A1
IC4	B2	R508	*A1
IC5	A2	R600	*A2
		R601	*A1
Q2	*C1	R602	*A1
Q4	*C1	R603	*A1
Q101	*D1	R604	A2
Q201	*D2	R605	A2
Q301	*C1	R606	*A2
Q401	*C2	R607	*A2
Q501	*A1	R608	A1
Q601	*A1	R609	A1
Q701	*B1	R700	*B2
		R701	*B2
R1	D2	R702	*B1
R2	C1	R703	*B1
R3	*C1	R706	B2
R4	C1	R707	B2
R5	*C2	R708	B1
R6	*C2	R709	B1
R9	*B2	R710	*B2
R10	*A2	R711	*B2

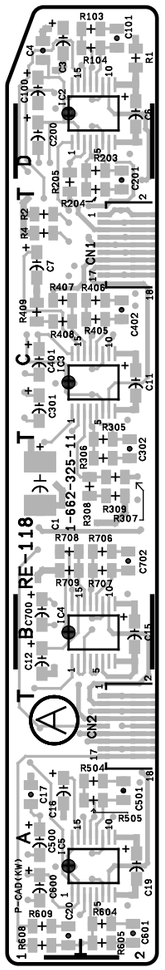

RE-118 -A SIDE-
1-662-325-11

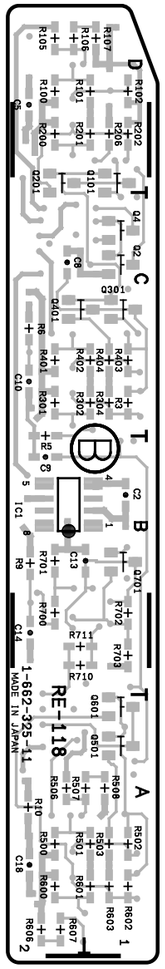

RE-118 -B SIDE-
1-662-325-11

DNV-5(SY):S/N 10001 and Higher
DNV-5(J):S/N 30001 and Higher
DNW-7/90/90WS(SY):S/N 10001 and Higher
DNW-7/90/90WS(J):S/N 30001 and Higher
DNW-7P/90P/90WSP(SY):S/N 40001 and Higher

RE-119 (1-662-326-11)
---
* : B SIDE

C1	C1	D6	* C3	Q702	* B1
C2	* C1	D100	* A1	Q703	* A3
C3	D4	D200	* D1		
C4	C4	D300	* B2	R1	C4
C5	D4	D301	* B3	R2	C4
C6	* D4	D400	* A1	R3	C4
C7	C4	D401	* A2	R4	C4
C8	* C4	D500	* D2	R5	C4
C100	* A1	D501	* D3	R6	C4
C101	A1	D600	* C2	R7	* C4
C102	* A1	D601	* C3	R8	* C4
C103	A1	D700	* B1	R9	* C4
C104	* A4	D701	* B1	R10	* B3
C105	A3	D702	* B3	R11	* C4
C200	* D1			R12	* B3
C201	D1	IC1	* D4	R13	* B3
C202	* D1	IC2	* C4	R100	* B1
C203	D1	IC100	* A1	R101	* A1
C204	* A4	IC200	* D1	R102	* A3
C205	D3	IC300	* B2	R103	* A3
C300	* B1	IC400	* A2	R200	* C1
C301	* A2	IC500	* D2	R201	* D1
C302	* B3	IC600	* C2	R202	C4
C303	B2	IC700	* B1	R203	C4
C304	* B3			R300	* B1
C305	B2	L100	A1	R301	* B2
C306	* A4	L101	A1	R302	* B2
C307	* A4	L102	A3	R303	* A2
C308	B3	L200	D1	R304	* B3
C309	A3	L201	D1	R305	* B2
C400	* A2	L202	D3	R306	* A3
C401	* A2	L300	B1	R307	* B4
C402	* A2	L301	B2	R308	* B4
C403	A2	L302	B3	R309	* B3
C404	* A3	L303	B3	R310	* B3
C405	A2	L400	A2	R400	* A1
C406	* A4	L401	A2	R401	* A1
C407	A3	L402	A3	R402	* A2
C500	* D2	L500	C2	R403	* A1
C501	* D2	L501	D2	R404	* A2
C502	* D3	L502	D3	R405	* A1
C503	D2	L600	C1	R406	* A2
C504	* D3	L601	C2	R407	* A3
C505	D2	L602	C3	R408	* A3
C506	* B4	L700	C1	R500	* D1
C507	C3	L701	C3	R501	* C2
C600	* C1	L702	C3	R502	* D3
C601	* C1	L703	B3	R503	* D2
C602	* C2			R504	* D2
C603	C2	Q1	D4	R505	* D2
C604	* C2	Q2	* C3	R506	* D3
C605	C2	Q3	* D4	R507	* B4
C606	* B3	Q4	* B3	R508	* B4
C607	B3	Q5	* B4	R600	* C1
C608	* A4	Q6	* B3	R601	* C2
C700	* C1	Q100	* A1	R602	* C2
C701	B1	Q101	* A1	R603	* C2
C702	* B1	Q200	* D1	R604	* C3
C703	* B3	Q201	* D1	R605	* C2
C704	B1	Q300	* B1	R606	* C2
C705	B3	Q301	* B1	R607	* B4
C706	* B1	Q302	* B1	R608	* B3
C707	B1	Q303	* B2	R609	* B3
C708	* A4	Q400	* A2	R700	* B1
C709	* A4	Q401	* A1	R703	* C1
C710	C3	Q402	* B1	R704	* A4
C711	B3	Q403	* A2	R705	* A4
C712	C3	Q500	* D1	R706	* A4
C713	* A4	Q501	* D1	R707	* A4
CN1	A1	Q502	* D1	R708	* A3
CN2	C1	Q503	* D2	R709	* A3
CN3	A4	Q600	* C1	R710	* A3
		Q601	* C1	R711	* A3
D1	C4	Q602	* C1	R712	* A3
D2	* A3	Q603	* C2	R713	* B1
D3	* B3	Q604	* B3	R714	* B1
D4	* C4	Q700	* B1		
D5	* A3	Q701	* C1	T700	B2

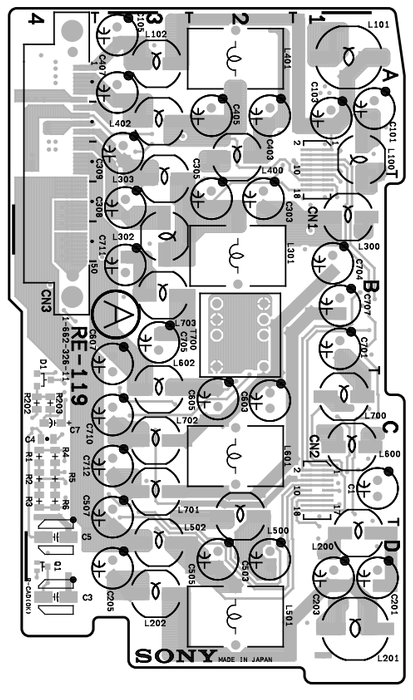

RE-119 -A SIDE-
1-662-326-11

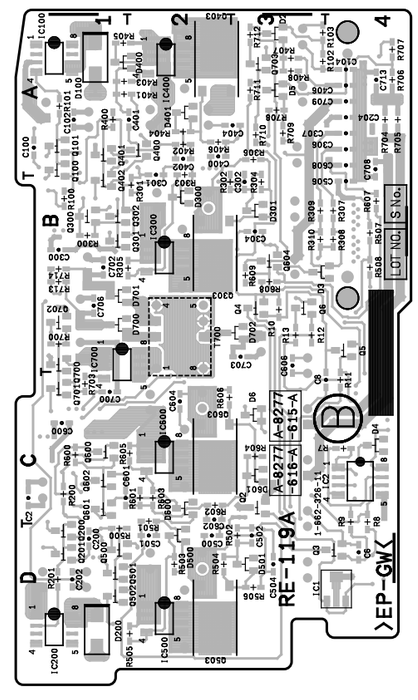

RE-119 -B SIDE-
1-662-326-11

DNV-5(SY):S/N 10001 and Higher
DNV-5(J):S/N 30001 and Higher
DNW-7/90/90WS(SY):S/N 10001 and Higher
DNW-7/90/90WS(J):S/N 30001 and Higher
DNW-7P/90P/90WSP(SY):S/N 40001 and Higher

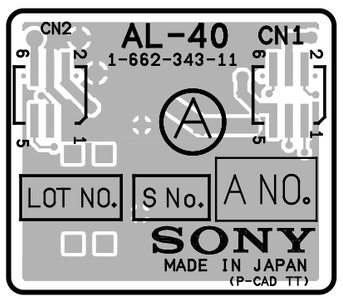

AL-40 -A SIDE-
1-662-343-11

DNV-5(SY):S/N 10001 and Higher
DNV-5(J):S/N 30001 and Higher
DNW-7/90/90WS(SY):S/N 10001 and Higher
DNW-7/90/90WS(J):S/N 30001 and Higher
DNW-7P/90P/90WSP(SY):S/N 40001 and Higher

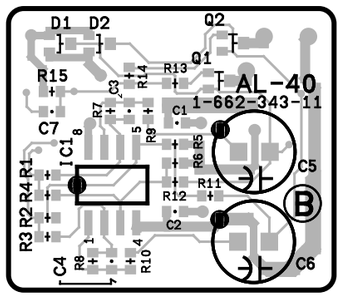

AL-40 -B SIDE-
1-662-343-11

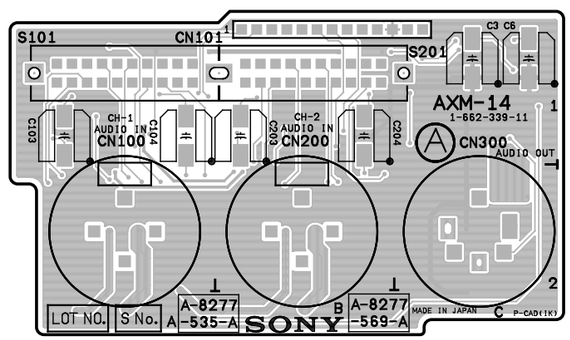

DNV-5(SY):S/N 10001 and Higher
DNV-5(J):S/N 30001 and Higher
DNW-7/90/90WS(SY):S/N 10001 and Higher
DNW-7/90/90WS(J):S/N 30001 and Higher
DNW-7P/90P/90WSP(SY):S/N 40001 and Higher

AXM-14 -A SIDE-
1-662-339-11

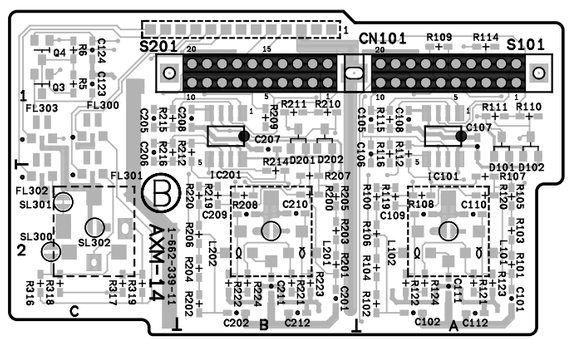

AXM-14 -B SIDE-
1-662-339-11

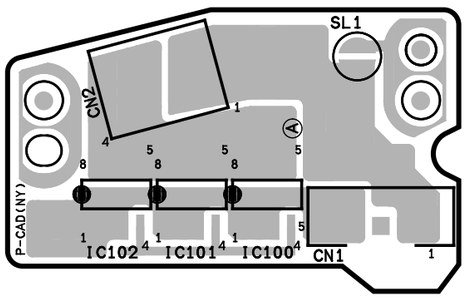

DNV-5(SY):S/N 10001 and Higher
DNV-5(J):S/N 30001 and Higher

CT-185 -A SIDE-
1-662-480-11

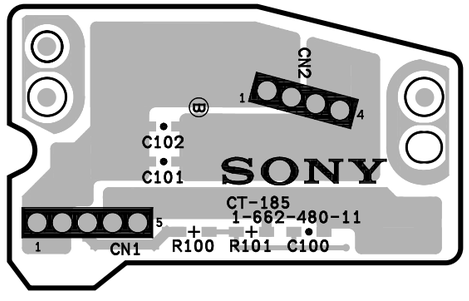

CT-185 -B SIDE-
1-662-480-11

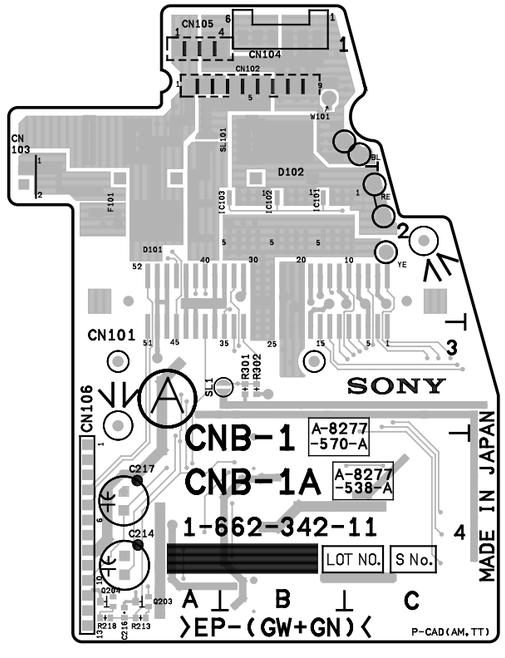

DNV-5(SY):S/N 10001 and Higher
DNV-5(J):S/N 30001 and Higher
DNW-7/90/90WS(SY):S/N 10001 and Higher
DNW-7/90/90WS(J):S/N 30001 and Higher
DNW-7P/90P/90WSP(SY):S/N 40001 and Higher

CNB-1 -A SIDE-
1-662-342-11

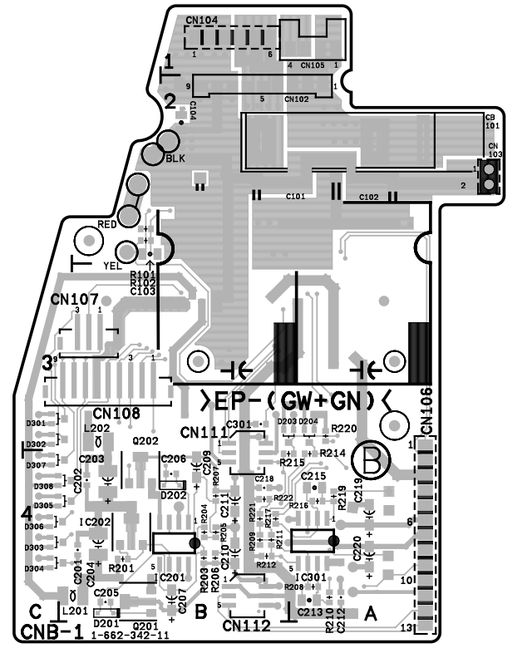

CNB-1 -B SIDE-
1-662-342-11

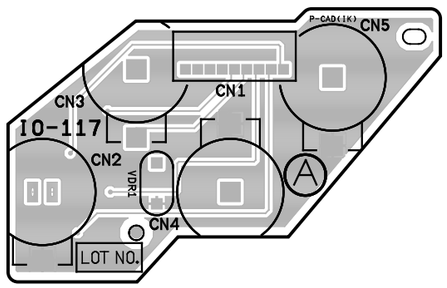

DNV-5(SY):S/N 10001 and Higher
DNV-5(J):S/N 30001 and Higher
DNW-7/90/90WS(SY):S/N 10001 and Higher
DNW-7/90/90WS(J):S/N 30001 and Higher
DNW-7P/90P/90WSP(SY):S/N 40001 and Higher

IO-117 -A SIDE-
1-662-338-11

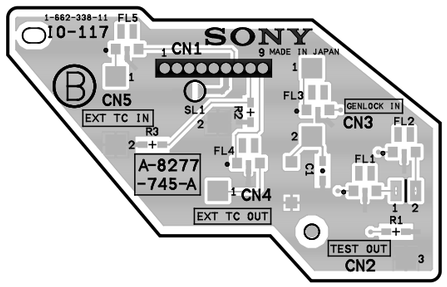

IO-117 -B SIDE-
1-662-338-11

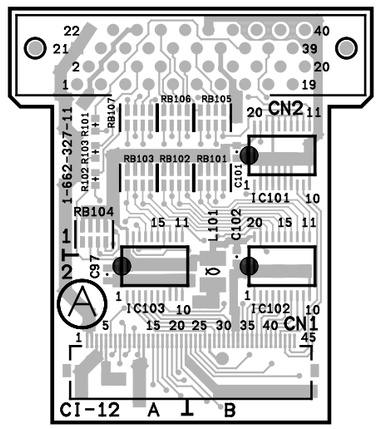

DNV-5(SY):S/N 10001 and Higher
DNV-5(J):S/N 30001 and Higher
DNW-7/90/90WS(SY):S/N 10001 and Higher
DNW-7/90/90WS(J):S/N 30001 and Higher
DNW-7P/90P/90WSP(SY):S/N 40001 and Higher

CI-12 -A SIDE-
1-662-327-11

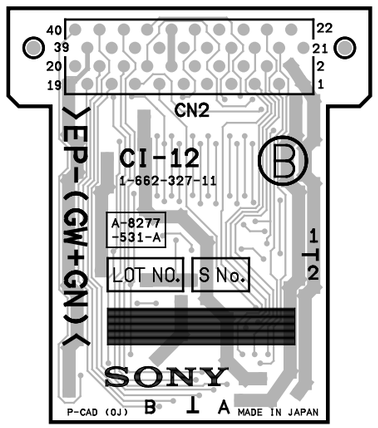

CI-12 -B SIDE-
1-662-327-11

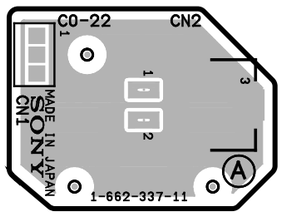

CO-22 -A SIDE-
1-662-337-11

DNV-5(SY):S/N 10001 and Higher
DNV-5(J):S/N 30001 and Higher
DNW-7/90/90WS(SY):S/N 10001 and Higher
DNW-7/90/90WS(J):S/N 30001 and Higher
DNW-7P/90P/90WSP(SY):S/N 40001 and Higher

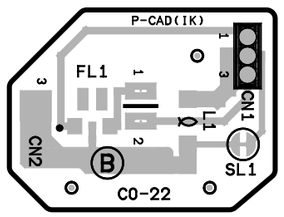

CO-22 -B SIDE-
1-662-337-11

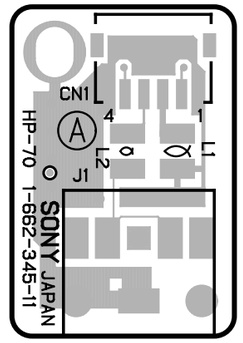

HP-70 -A SIDE-
1-662-345-11

DNV-5(SY):S/N 10001 and Higher
DNV-5(J):S/N 30001 and Higher
DNW-7/90/90WS(SY):S/N 10001 and Higher
DNW-7/90/90WS(J):S/N 30001 and Higher
DNW-7P/90P/90WSP(SY):S/N 40001 and Higher

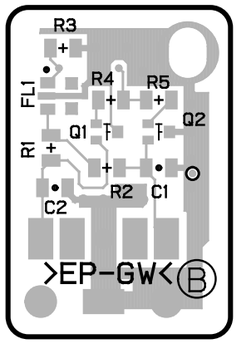

HP-70 -B SIDE-
1-662-345-11

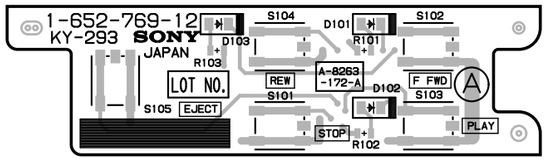

DNV-5(SY):S/N 10001 and Higher
DNV-5(J):S/N 30001 and Higher
DNW-7/90/90WS(SY):S/N 10001 and Higher
DNW-7/90/90WS(J):S/N 30001 and Higher
DNW-7P/90P/90WSP(SY):S/N 40001 and Higher

KY-293 -A SIDE-
1-652-769-12

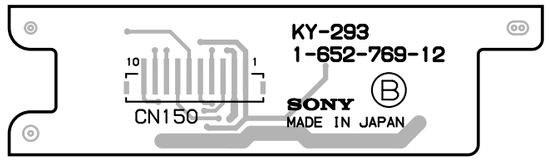

KY-293 -B SIDE-
1-652-769-12

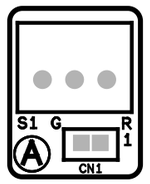

PSW-33
-A SIDE-
1-662-312-11

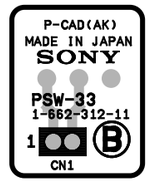

PSW-33
-B SIDE-
1-662-312-11

DNW-7/90/90WS(SY):S/N 10001 and Higher
DNW-7/90/90WS(J):S/N 30001 and Higher
DNW-7P/90P/90WSP(SY):S/N 40001 and Higher

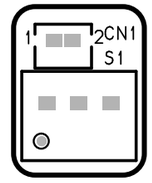

PSW-55
-A SIDE-
1-662-476-11

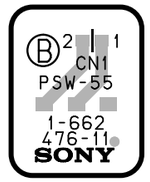

PSW-55
-B SIDE-
1-662-476-11

DNV-5(SY):S/N 10001 and Higher
DNV-5(J):S/N 30001 and Higher

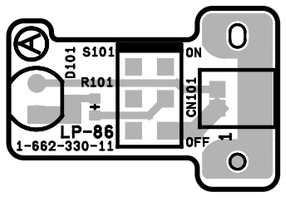

DNW-7/90/90WS(SY):S/N 10001 and Higher
DNW-7/90/90WS(J):S/N 30001 and Higher
DNW-7P/90P/90WSP(SY):S/N 40001 and Higher

LP-86 -A SIDE-
1-662-330-11

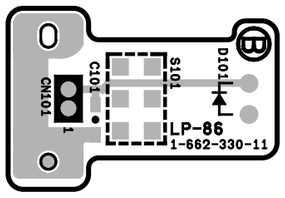

LP-86 -B SIDE-
1-662-330-11

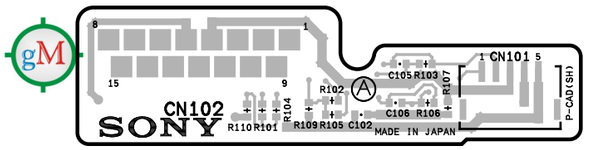

DNV-5(SY):S/N 10001 and Higher
DNV-5(J):S/N 30001 and Higher
DNW-7/90/90WS(SY):S/N 10001 and Higher
DNW-7/90/90WS(J):S/N 30001 and Higher
DNW-7P/90P/90WSP(SY):S/N 40001 and Higher

RX-26 -A SIDE-
1-662-328-11

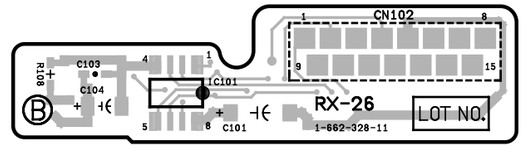

RX-26 -B SIDE-
1-662-328-11

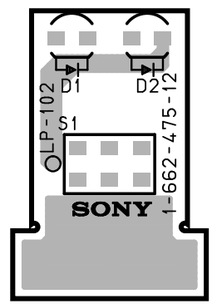

DNV-5(SY):S/N 10001 and Higher
DNV-5(J):S/N 30001 and Higher

LP-102 -A SIDE-
1-662-475-12

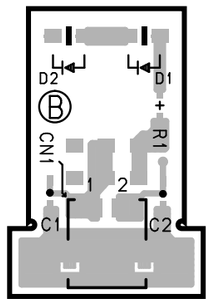

LP-102 -B SIDE-
1-662-475-12

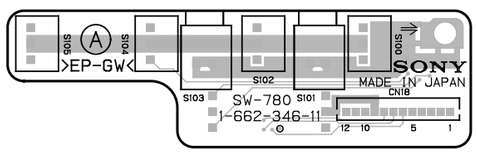

DNW-7/90/90WS(SY):S/N 10001 and Higher
DNW-7/90/90WS(J):S/N 30001 and Higher
DNW-7P/90P/90WSP(SY):S/N 40001 and Higher

SW-780 -A SIDE-
1-662-346-11

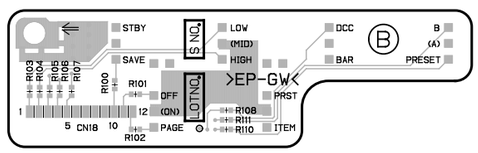

SW-780 -B SIDE-
1-662-346-11

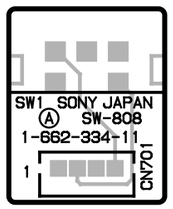

SW-808 -A SIDE-
1-662-334-11

DNW-7/90/90WS(SY):S/N 10001 and Higher
DNW-7/90/90WS(J):S/N 30001 and Higher
DNW-7P/90P/90WSP(SY):S/N 40001 and Higher

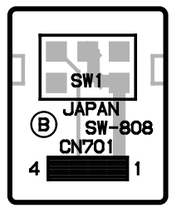

SW-808 -B SIDE-
1-662-334-11

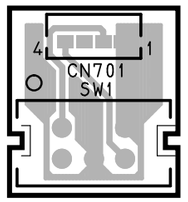

SW-882 -A SIDE-
1-662-479-11

DNV-5(SY):S/N 10001 and Higher
DNV-5(J):S/N 30001 and Higher

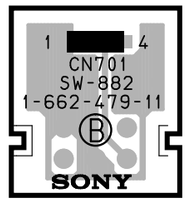

SW-882 -B SIDE-
1-662-479-11

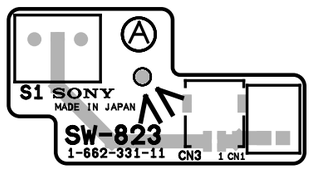

SW-823 -A SIDE-
1-662-331-11

DNW-7/90/90WS(SY):S/N 10001 and Higher
DNW-7/90/90WS(J):S/N 30001 and Higher
DNW-7P/90P/90WSP(SY):S/N 40001 and Higher

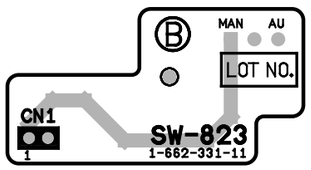

SW-823 -B SIDE-
1-662-331-11

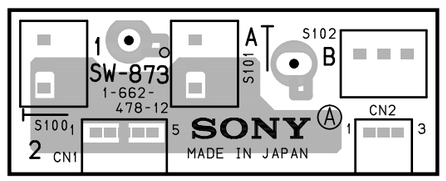

DNV-5(SY):S/N 10001 and Higher
DNV-5(J):S/N 30001 and Higher

SW-873 -A SIDE-
1-662-478-12

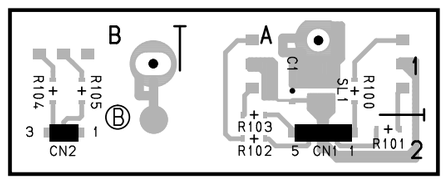

SW-873 -B SIDE-
1-662-478-12

MB-627 (1-662-310-12)
---
* : B SIDE

C1	*D1
C2	*D1
C3	*D1
C4	D1
C10	A1
C11	D2
C12	D2
C13	A1
C14	*C2
C15	C2
C16	A1
C17	A2
C18	C1
C19	C1
C22	C2
C23	C2
C51	*D2
C52	*D2
C53	*D1
C54	*D1
C55	*D1
C56	D1
C57	*D1
C58	*D1
CN1	A2
CN2	B2
CN3	A1
CN4	B1
CN5	B1
CN6	D1
CN20	*D1
CN22	*B1
CN23	*C1
CN25	*A1
CN26	*A1
CN27	B2
CN30	C2
CN31	B2
CN32	A1
CN33	A1
CN34	A2
CN35	B2
CN50	D1
CN51	D1
CN52	D1
CN53	D1
CN54	D2
E1	C2
L1	*D1
L2	*D1
R1	*D2
R4	D2
R5	D2
R10	B2
R11	B2
R12	A2
R13	A2
R14	A2
R15	A2
R16	C2
R17	B1
R18	C1
R19	C1
RB1	B1

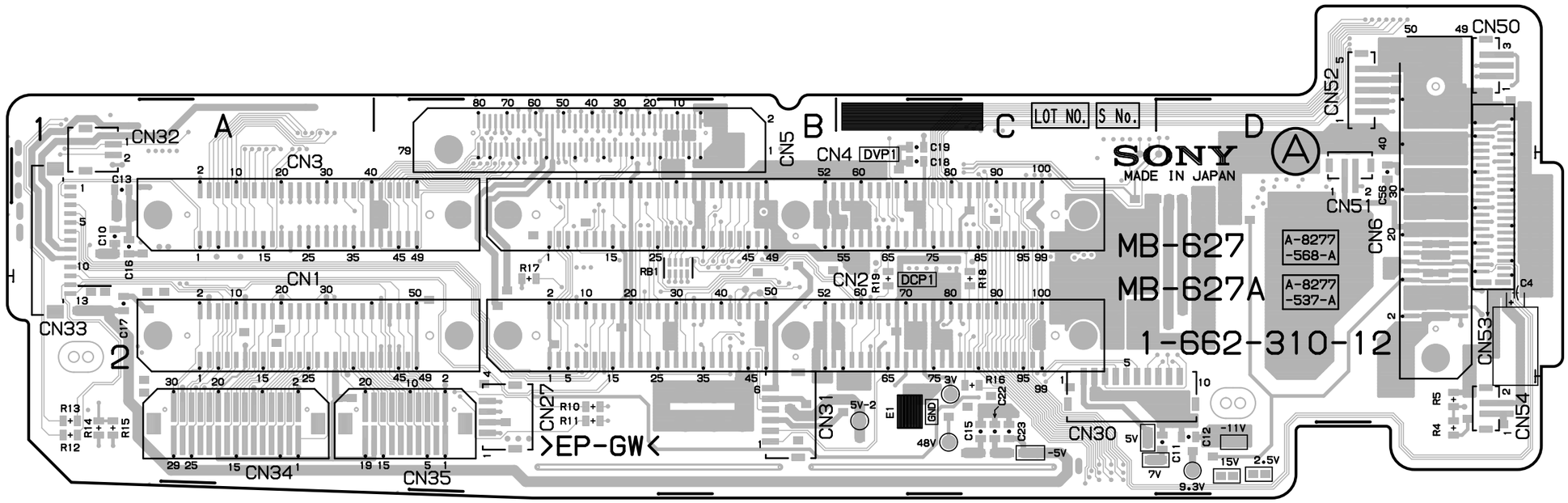

DNV-5(SY):S/N 10001 and Higher
DNV-5(J):S/N 30001 and Higher
DNW-7/90/90WS(SY):S/N 10001 and Higher
DNW-7/90/90WS(J):S/N 30001 and Higher
DNW-7P/90P/90WSP(SY):S/N 40001 and Higher

MB-627 -A SIDE-
1-662-310-12

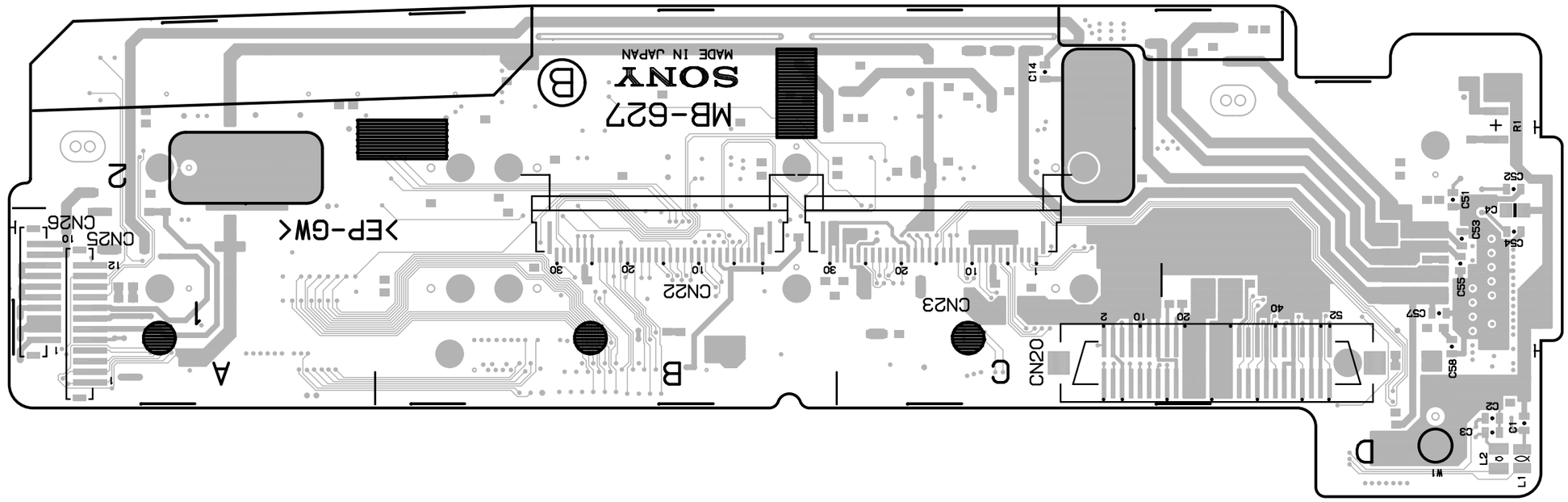

MB-627 -B SIDE-
1-662-310-12

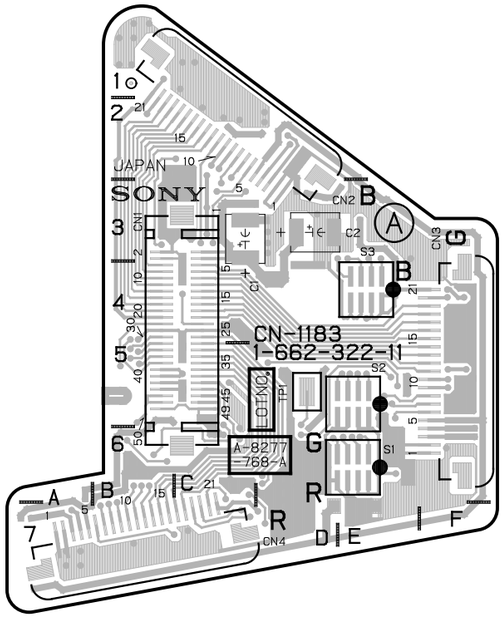

DNW-7/90/90WS(SY):S/N 10001 and Higher
DNW-7/90/90WS(J):S/N 30001 and Higher
DNW-7P/90P/90WSP(SY):S/N 40001 and Higher

CN-1183 -A SIDE-
1-662-322-11

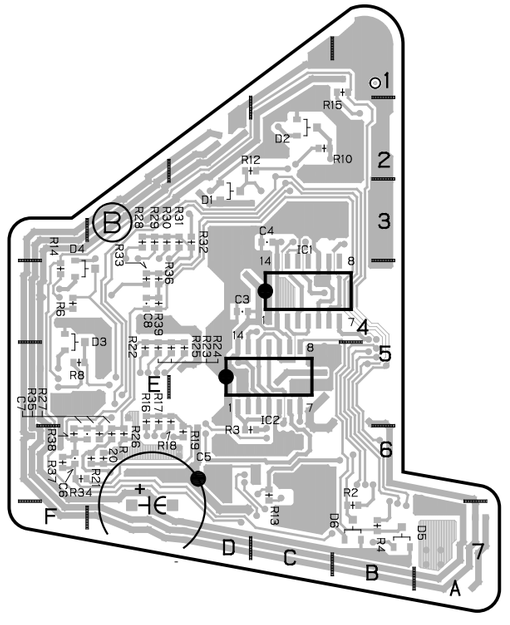

CN-1183 -B SIDE-
1-662-322-11

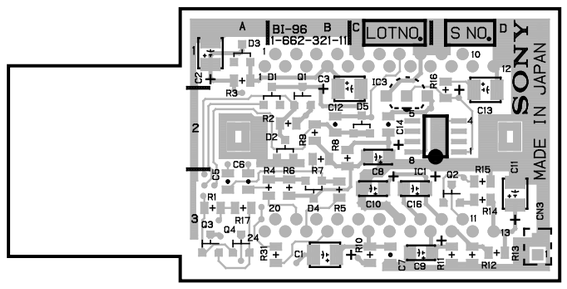

DNW-7/90/90WS(SY):S/N 10001 and Higher
DNW-7/90/90WS(J):S/N 30001 and Higher
DNW-7P/90P/90WSP(SY):S/N 40001 and Higher

BI-96 -A SIDE-
1-662-321-11

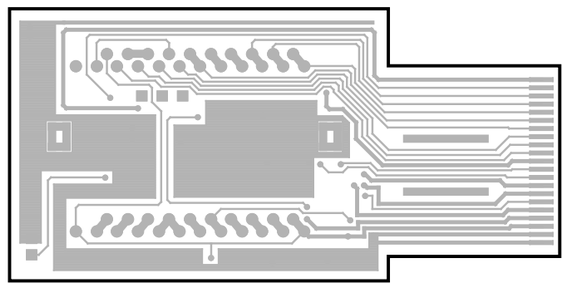

BI-96 -B SIDE-
1-662-321-11

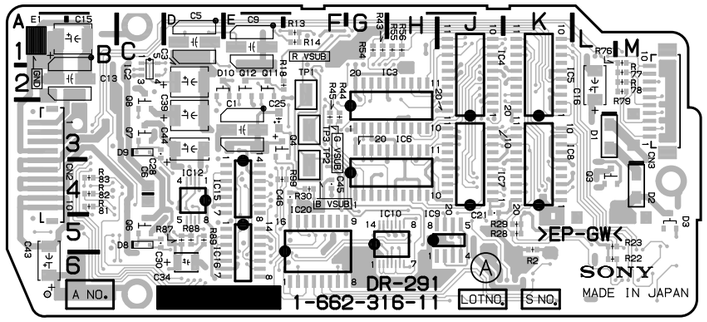

DNW-7/90/90WS(SY):S/N 10001 and Higher
DNW-7/90/90WS(J):S/N 30001 and Higher
DNW-7P/90P/90WSP(SY):S/N 40001 and Higher

DR-291 -A SIDE-
1-662-316-11

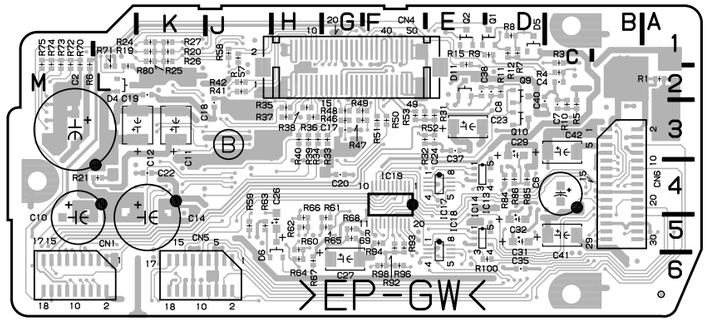

DR-291 -B SIDE-
1-662-316-11

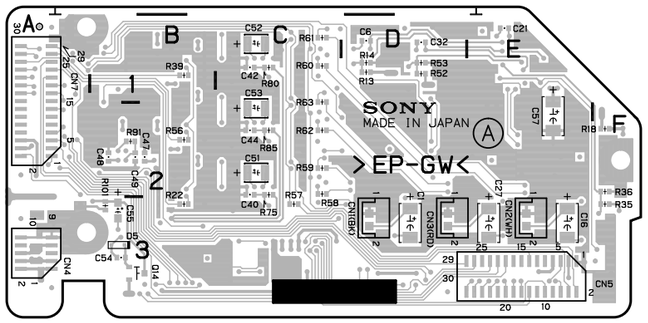

DNW-7/90/90WS(SY):S/N 10001 and Higher
DNW-7/90/90WS(J):S/N 30001 and Higher
DNW-7P/90P/90WSP(SY):S/N 40001 and Higher

PA-186 -A SIDE-
1-662-317-12

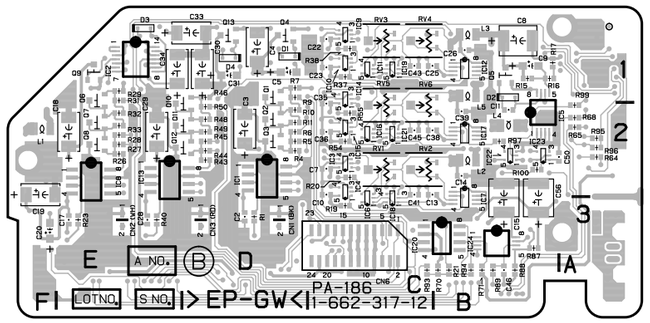

PA-186 -B SIDE-
1-662-317-12

http://getMANUAL.com
VA-167, TG-161

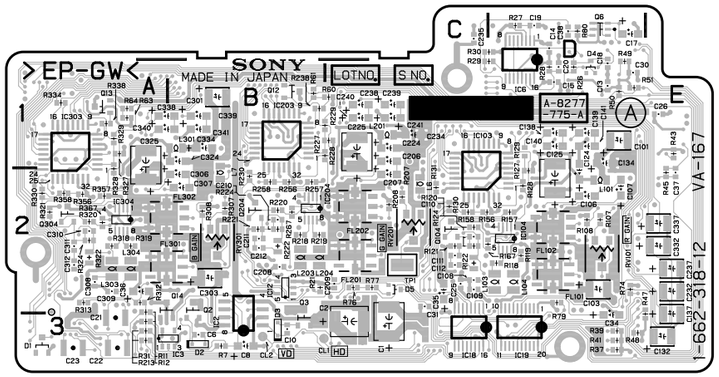

DNW-7/90/90WS(SY):S/N 10001 and Higher
DNW-7/90/90WS(J):S/N 30001 and Higher
DNW-7P/90P/90WSP(SY):S/N 40001 and Higher

VA-167 -A SIDE-
1-662-318-12

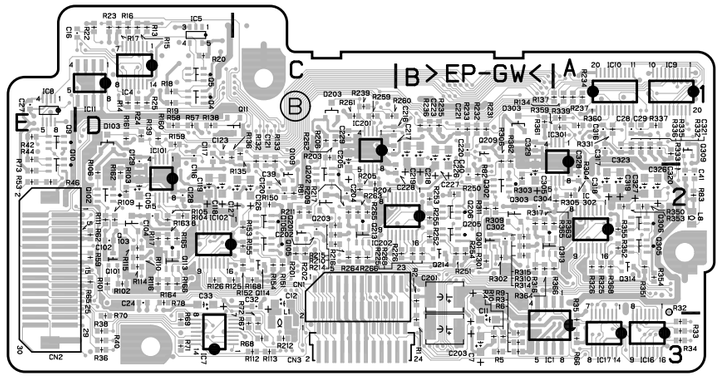

VA-167 -B SIDE-
1-662-318-12

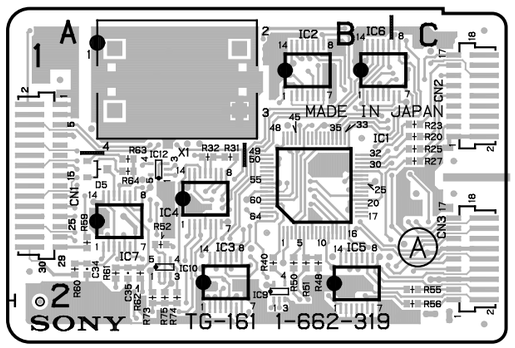

DNW-7(SY):S/N 10001 and Higher
DNW-7(J):S/N 30001 and Higher
DNW-7P(SY):S/N 40001 and Higher

TG-161 -A SIDE-
1-662-319-11,12

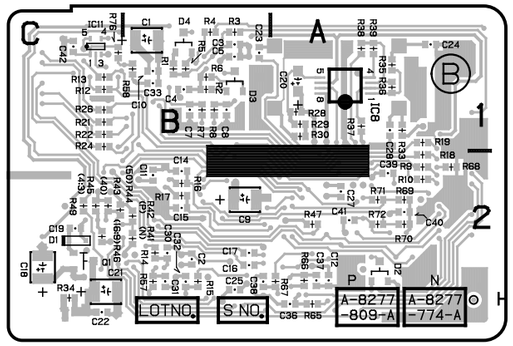

TG-161 -B SIDE-
1-662-319-11,12

Section 5
Schematic Diagrams

5-1

System Configuration	Board Name	Function Name	Page of Block Diagram	Page of Board Layout	Page of Schematic Diagram
CCD BLOCK	BI-96※W	CCD Imager (R, G, B)	3-16	4-29	5-119
	CN-1183※W	Connector Board for BI-96	3-16	4-29	5-118
	DR-291※W	CCD Driver	3-16	4-30	5-120
	PA-186※W	Pre-amp (Sample & Hold)	3-16	4-30	5-122
	TG-161※W7	Timing Generator	3-16	4-31	5-126
	TG-164※W90	Timing Generator	3-16		5-128
	VA-167※W	Video Amp	3-15	4-31	5-124
CAMERA/VIDEO	CN-1193※SD	Connector Board for DCP-1	3-8	4-5	5-19
	CT-187※V5	Camera Adaptor Control, 6P-remote Control, Setting Menu	3-12	4-4	5-4
	DCP-1※W	Camera Processor	3-8	4-7	5-6
	DVP-1	RF, Digital Audio Processor, Timing Clock Generator, System Controller for VTR Block	3-7	4-9	5-20
	DVP-2	Digital Bit Reduction Decoder, Digital Encoder, Digital Decoder	3-7	4-10	5-34
	ES-11※W	Composite Encoder	–	4-15	5-46
	IF-634※V5	50-pin Interface, Video Input/Output	3-12	4-13	5-50
	PA-203※V5	Audio Pre-amp for 50-pin	3-4	4-20	5-59
	RC-61※WS	Rate (16:9 to 4:3) Converter	3-8		5-60
	TC-80	Analog Audio Processor, Time Code Generator	3-10	4-16	5-62※V5 5-72※W
DRUM/SERVO	HN-224	Harness, TC Amp	3-4	4-20	5-81
	MDC-5	Servo Controller	3-13	4-18	5-82
	MDR-1	Drum Motor Driver	3-4	4-20	5-86
MICROPHONE	AIF-8※W	Lens Control, Mic Amp	3-4	4-21	5-87
	MA-68※W	Camera Mic Pre-amp	–	4-21	5-88
	SW-789※W	Mic Level, Auto White/Black SW, VTR Start/Stop SW, Shutter On/Off Select SW	3-4	4-21	5-134
POWER SUPPLY	DC-87	Battery DC Filter	–	4-22	5-89
	PS-390	Power Supply (Light)	3-4	4-22	5-89
	RE-118	Regulator, Switching Control	3-14	4-23	5-90※V5 5-92※W
	RE-119	Regulator	3-14	4-23	5-94※V5 5-96※W
CONNECTOR BOX	AL-40	Audio CH-2 Line Out Amp	–	4-24	5-98
	AXM-14	Connector (AUDIO IN/OUT), Audio Pre-amp	3-4	4-24	5-99
	CNB-1	Circuit Breaker, Audio CH-1 Line Out Amp	3-4	4-24	5-100※V5 5-104※W
	CO-22	Connector (VBS OUT)	3-4	4-25	5-131, 135
	CT-185※V5	Power Supply for 50-pin	3-6	4-24	5-98
	DC-88	External DC Filter	–		5-131, 135
	IO-117	Connector (GEN LOCK IN, TEST OUT, TC IN, TC OUT)	3-4	4-25	5-107

System Configuration	Board Name	Function Name	Page of Block Diagram	Page of Board Layout	Page of Schematic Diagram
OTHERS	CI-12	40-pin Adaptor Interface	3-4	4-25	5-108
	HP-70	Earphone	3-4	4-25	5-131, 135
	KY-293	Function Key	–	4-26	5-130, 134
	LP-86※W	Back Tally, Back Tally Switch	–	4-26	5-135
	LP-102※V5	Back Tally, Back Tally Switch	–	4-26	5-131
	PSW-33※W	Power Switch	3-4	4-26	5-134
	PSW-55※V5	Power Switch	3-6	4-26	5-130
	RX-26	Audio Pre-amp for Wireless Microphone	3-4	4-26	5-109
	SW-780※W	Switch Panel	3-4	4-26	5-109
	SW-808※W	Rotary Encoder Switch	3-4	4-27	5-134
	SW-823※W	Menu and Light Auto/Manual Switch	3-4	4-27	5-135
	SW-873※V5	Menu and Light Auto/Manual Switch	–	4-27	5-130
	SW-882※V5	Rotary Encoder Switch	–	4-27	5-130
	MB-627	Mother Board	–	4-28	5-110※V5 5-114※W

※SD : For DNW-7/7P/90/90P only
※V5 : For DNV-5 only
※W : For DNW-7/7P/90/90P/90WS/90WSP only
※W7 : For DNW-7/7P only
※W90 : For DNW-90/90P/90WS/90WSP only
※WS : For DNW-90WS/90WSP only

5-2

DNW-7/7P/90/90P/90WS/90WSP

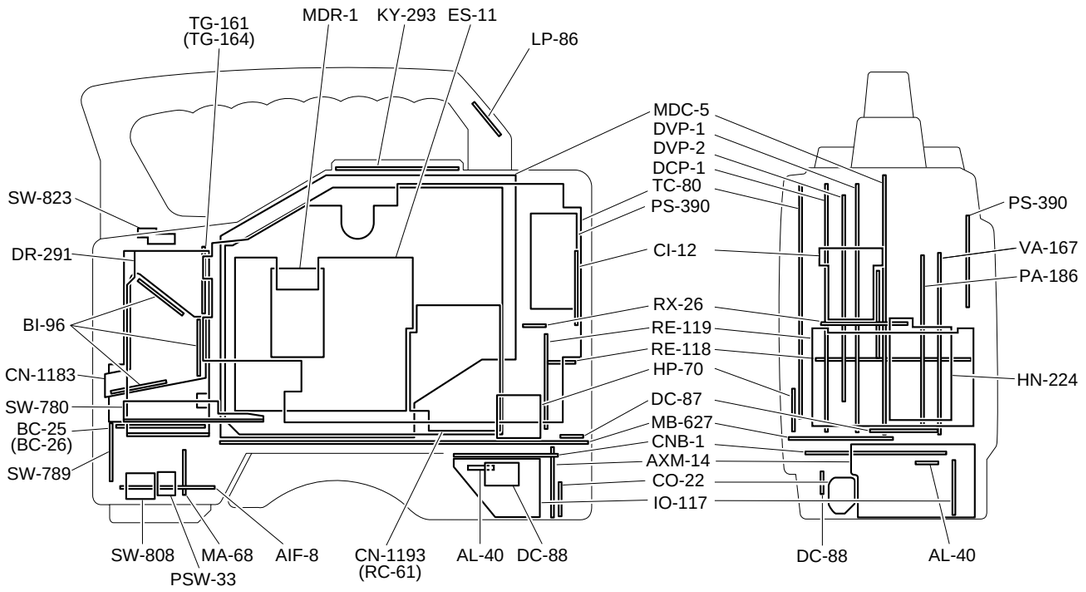

DNV-5

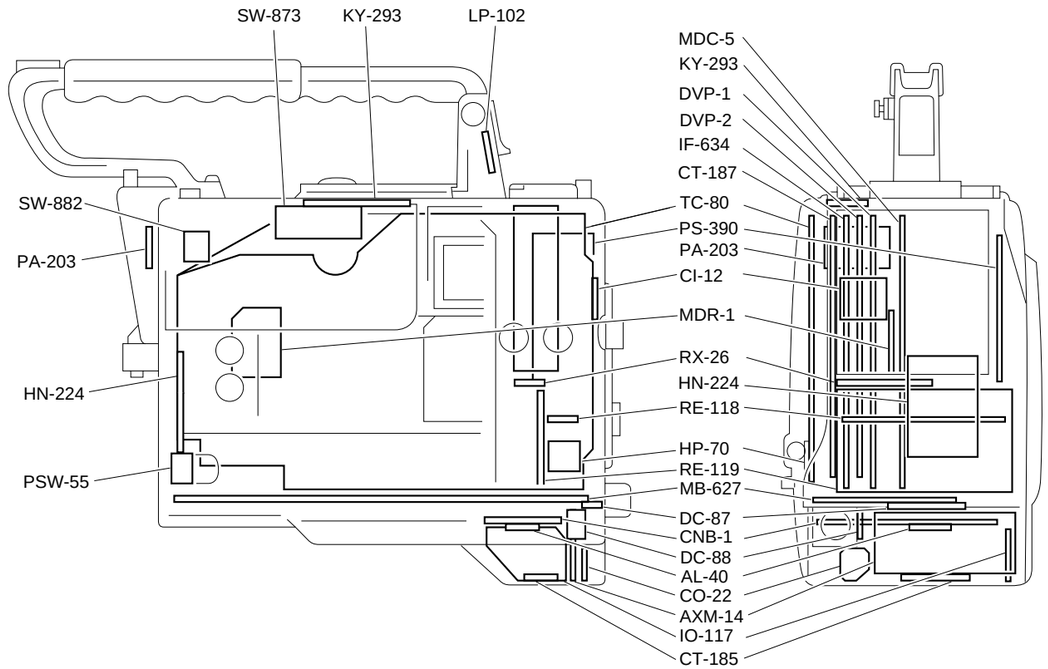

DNV-5(SY):S/N 10001 and Higher
DNV-5(J):S/N 30001 and Higher

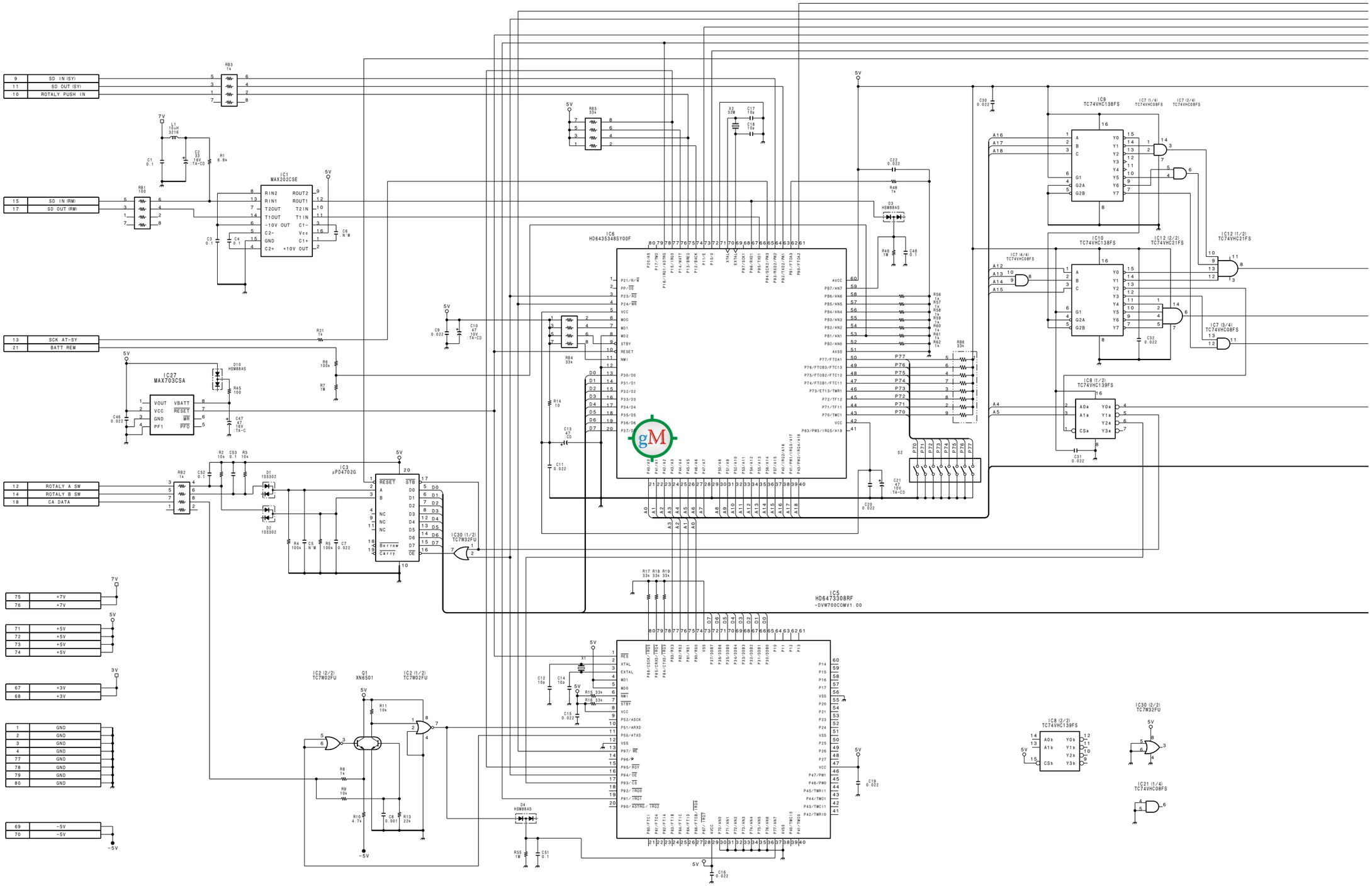

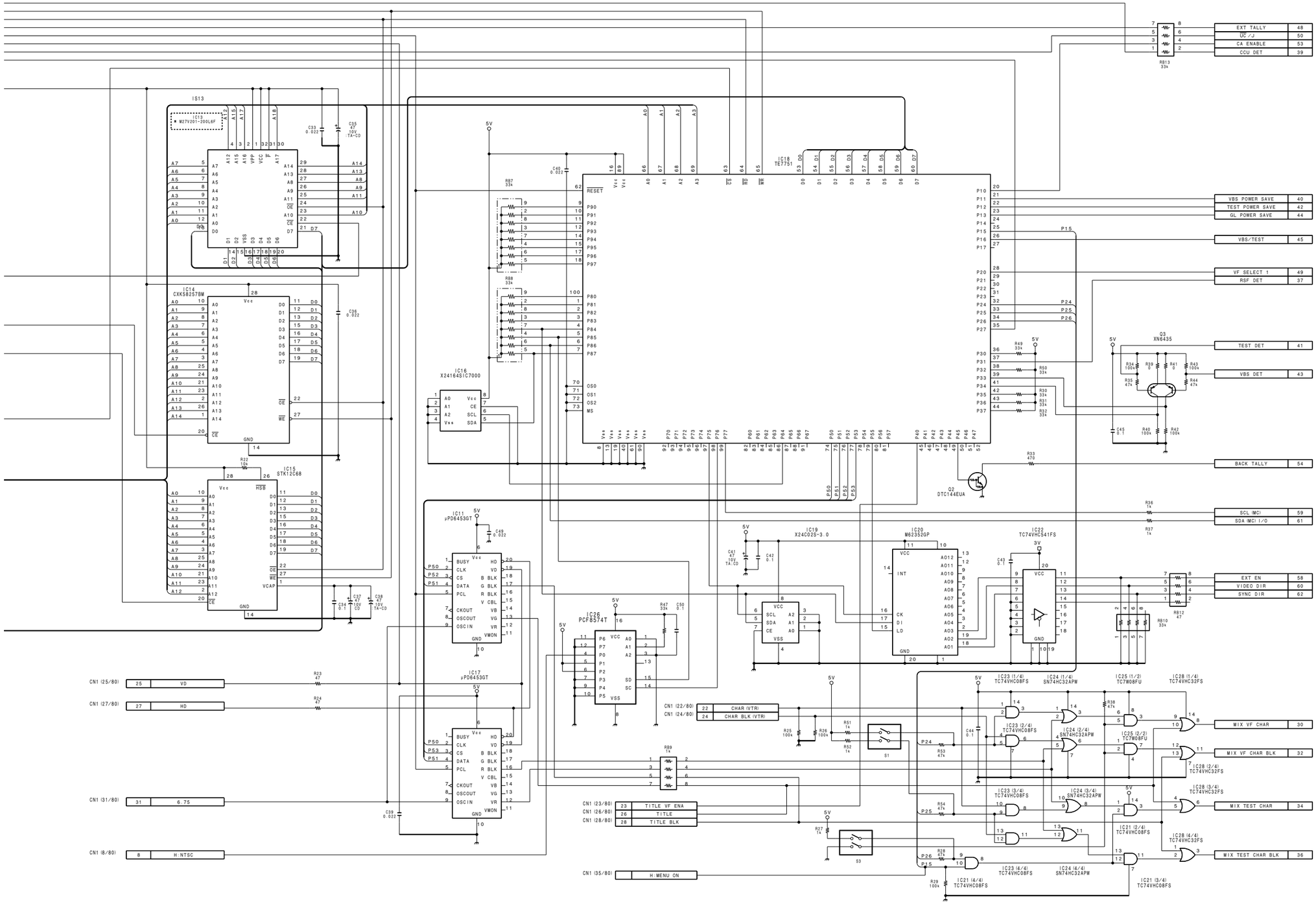

CAMERA ADAPTOR CONTROL
6P-REMOTE CONTROL
SETTING MENU

CT-187

BOARD NO. 1-662-333-12
LOT NO. 605-

B-¥DNV5-CT187-12

DNW-7/90/90WS(SY):S/N 10001 and Higher
DNW-7/90/90WS(J):S/N 30001 and Higher
DNW-7P/90P/90WSP(SY):S/N 40001 and Higher

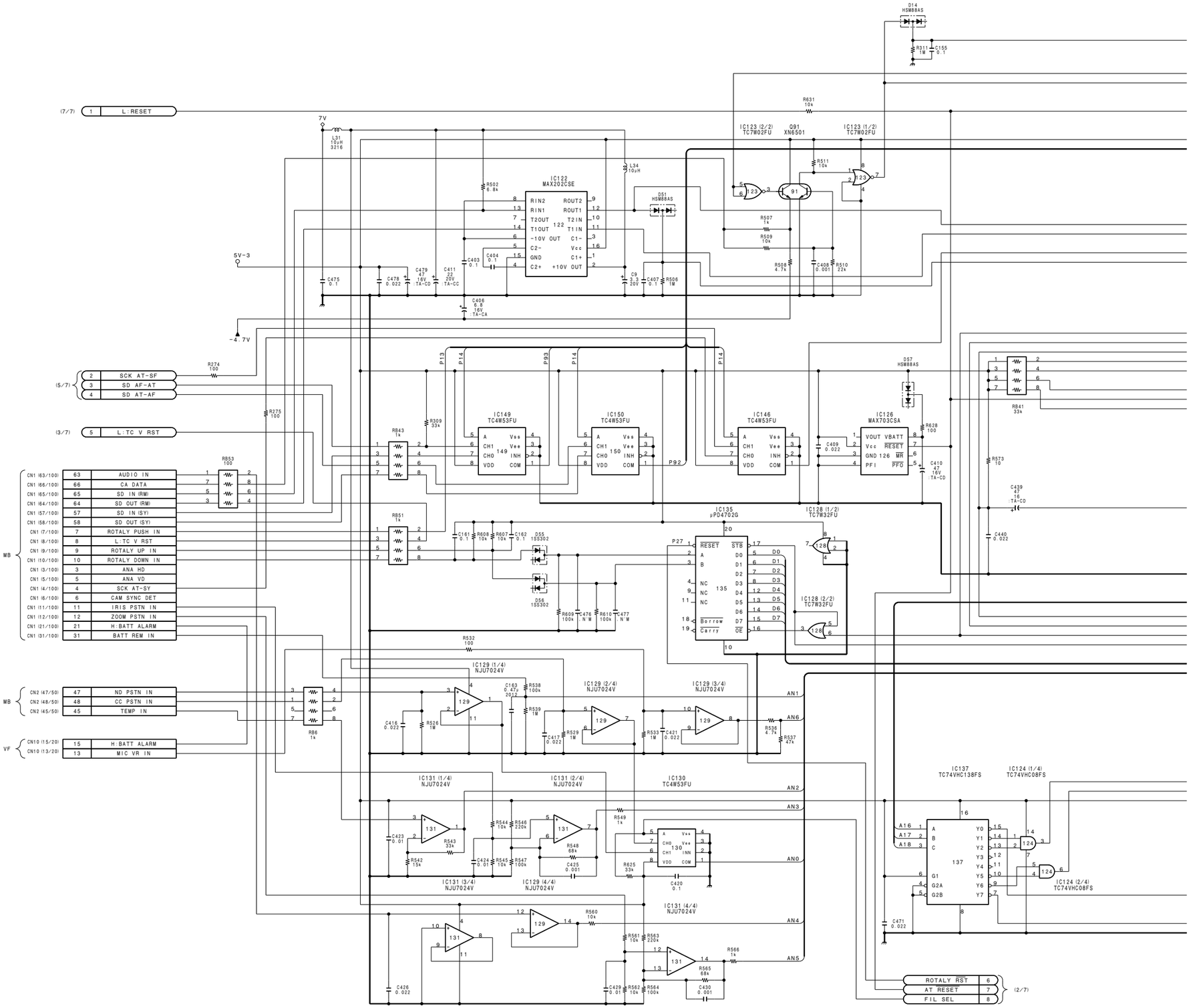

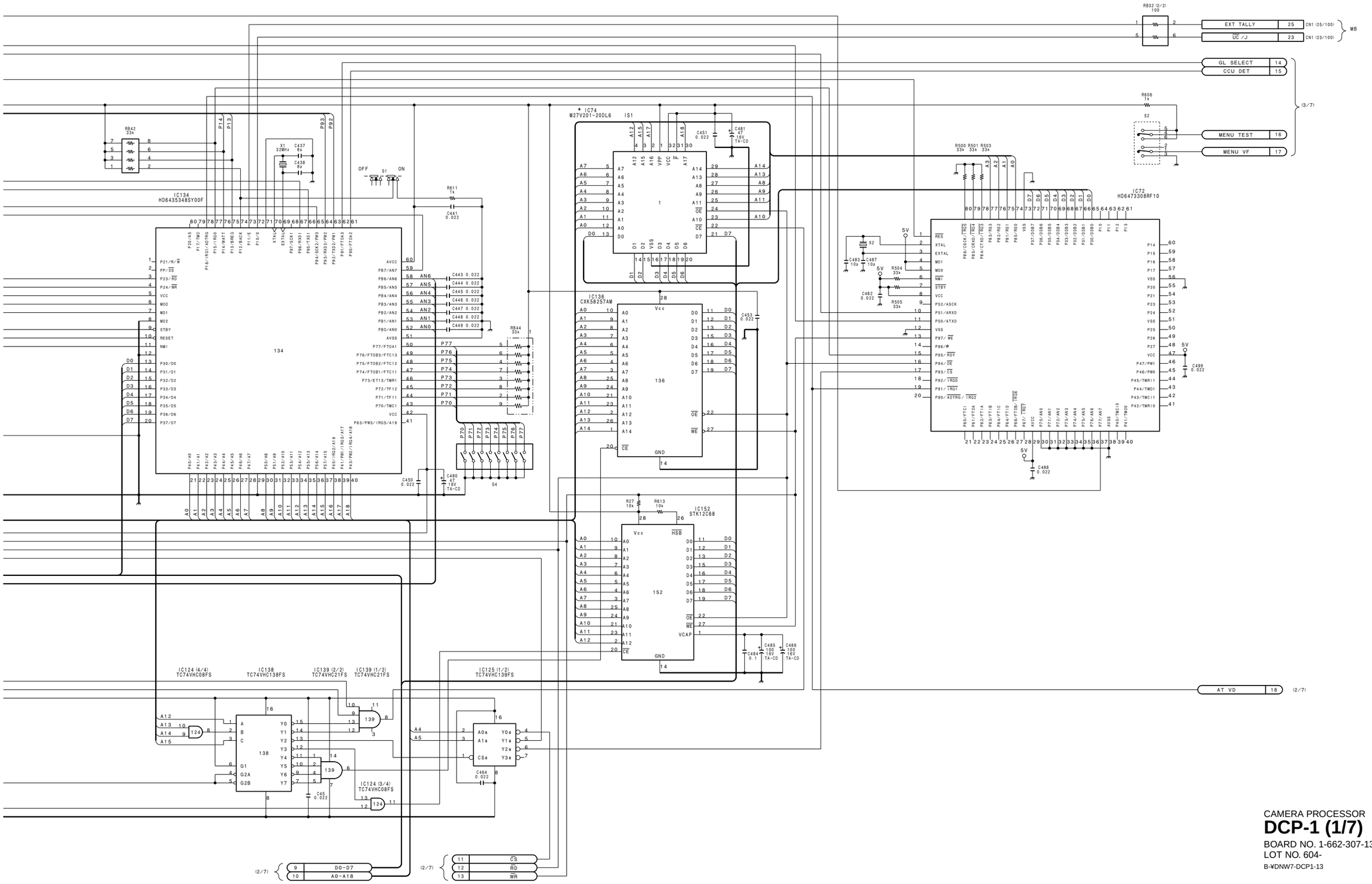

CAMERA PROCESSOR
DCP-1 (1/7)
BOARD NO. 1-662-307-13
LOT NO. 604-
B-¥DNW7-DCP1-13

DNW-7/90/90WS(SY):S/N 10001 and Higher
DNW-7/90/90WS(J):S/N 30001 and Higher
DNW-7P/90P/90WSP(SY):S/N 40001 and Higher

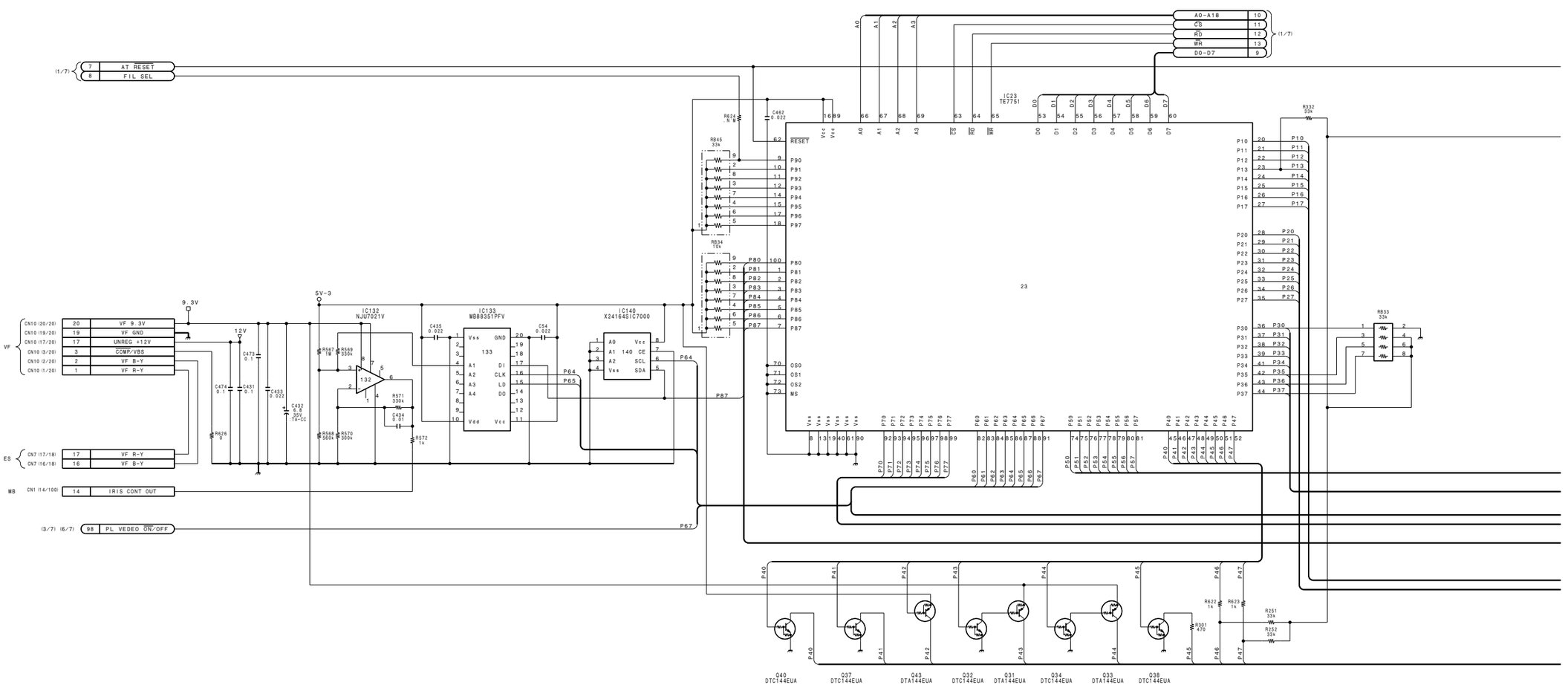

http://getMANUAL.com

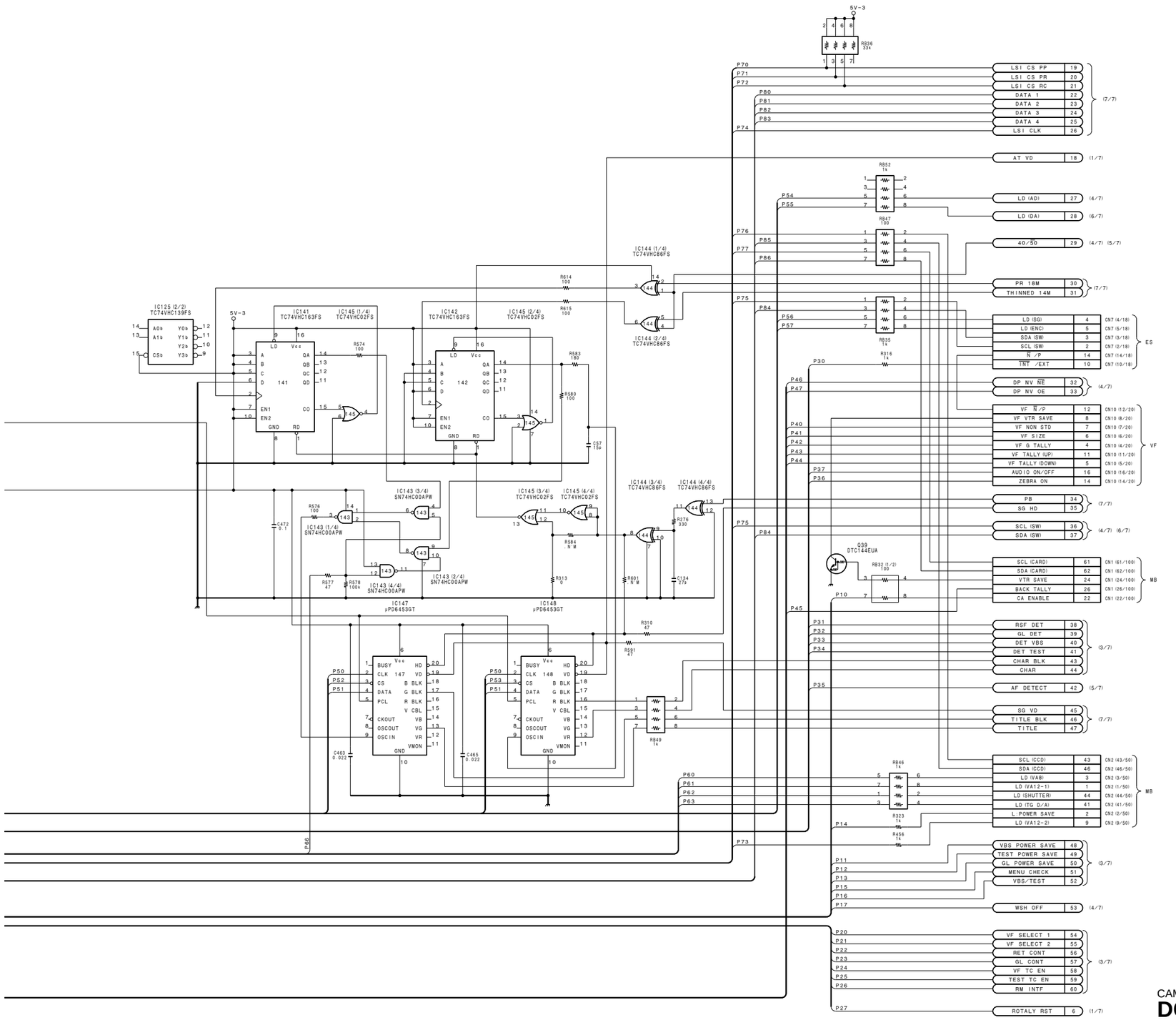

CAMERA PROCESSOR

DCP-1 (2/7)

BOARD NO. 1-662-307-13
LOT NO. 604-
B-¥DNW7-DCP1-13

DNW-7/90/90WS(SY):S/N 10001 and Higher
DNW-7/90/90WS(J):S/N 30001 and Higher
DNW-7P/90P/90WSP(SY):S/N 40001 and Higher

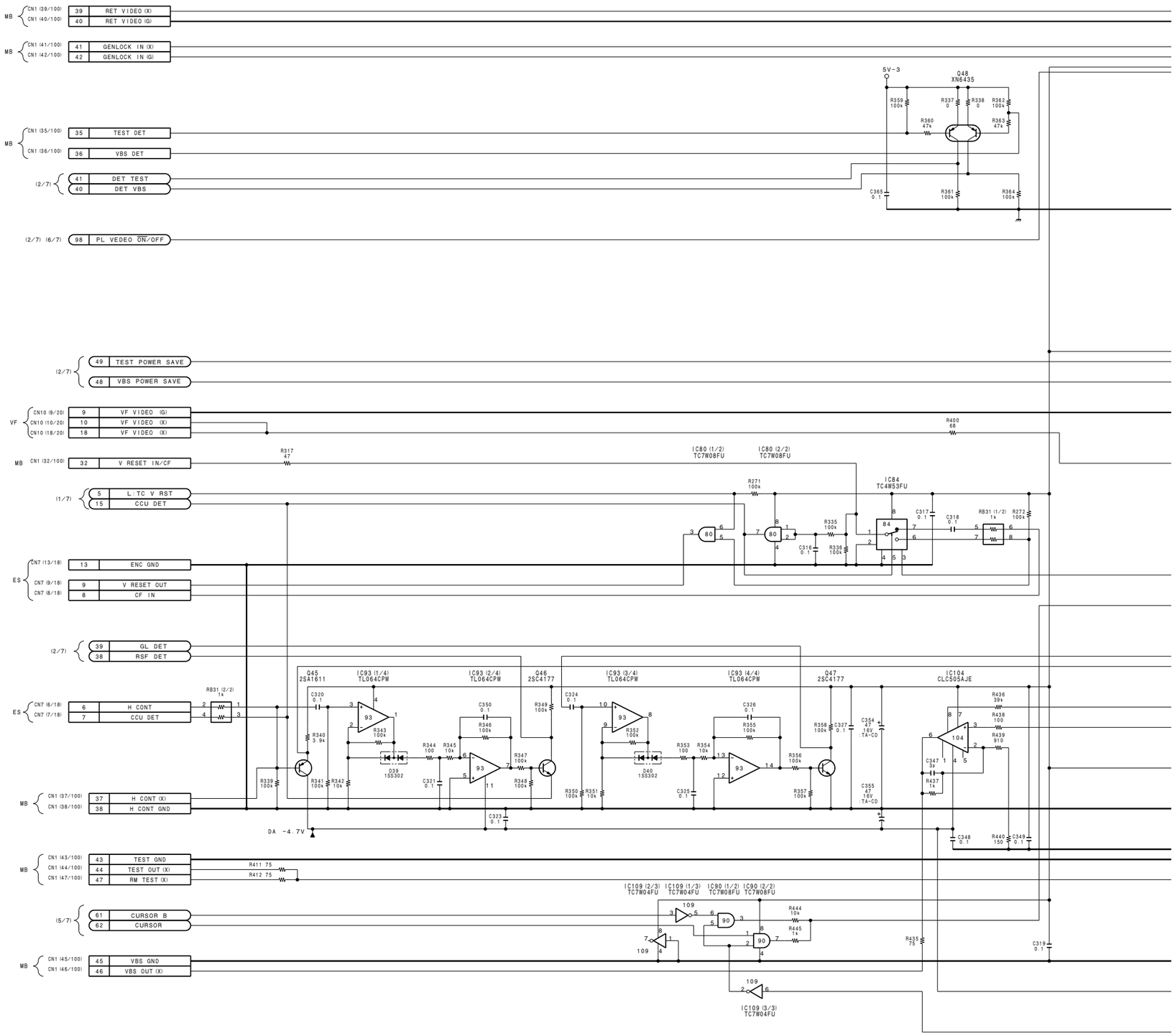

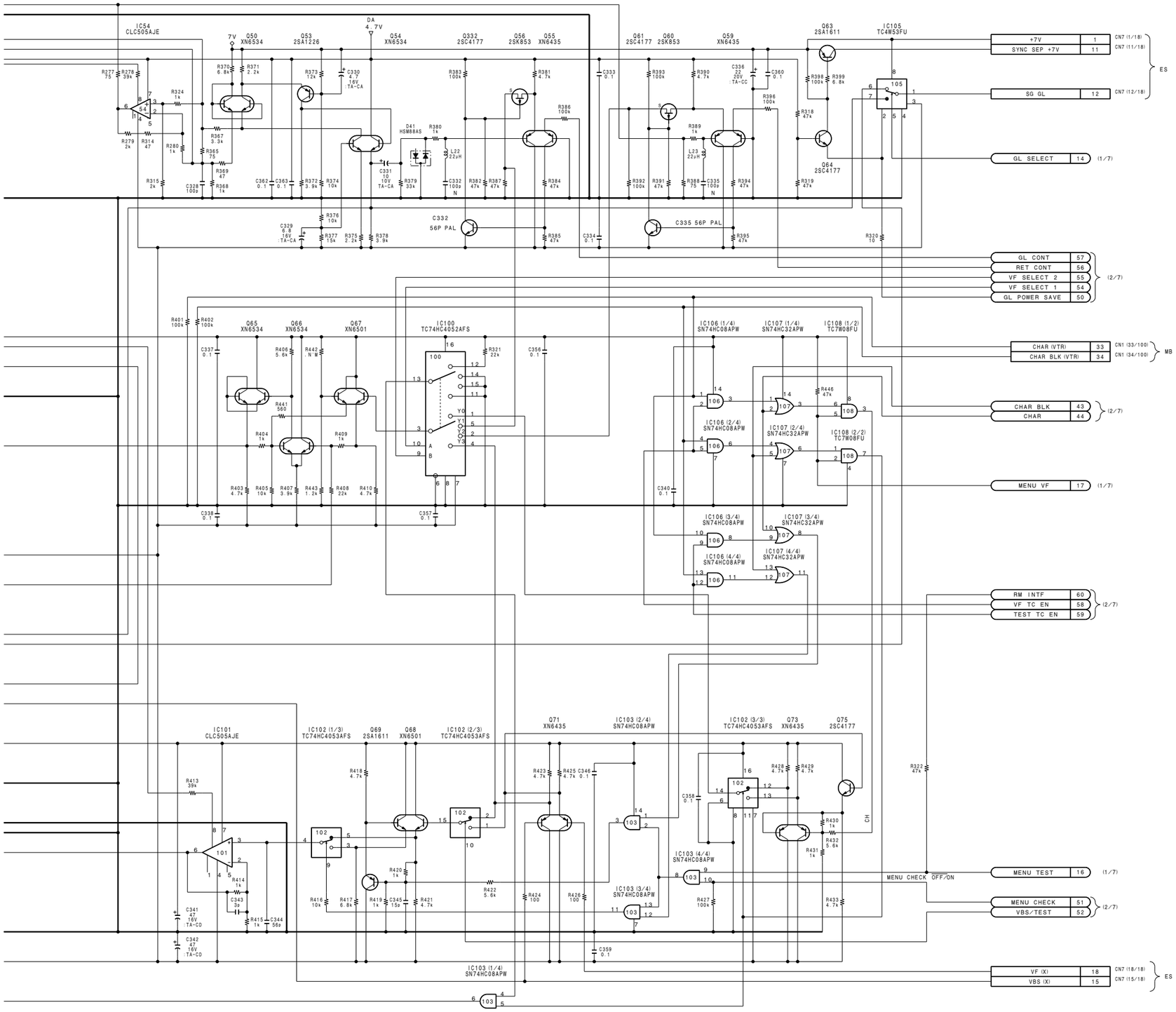

CAMERA PROCESSOR
DCP-1 (3/7)
BOARD NO. 1-662-307-13
LOT NO. 604-
B-¥DNW7-DCP1-13

DNW-7/90/90WS(SY):S/N 10001 and Higher
DNW-7/90/90WS(J):S/N 30001 and Higher
DNW-7P/90P/90WSP(SY):S/N 40001 and Higher

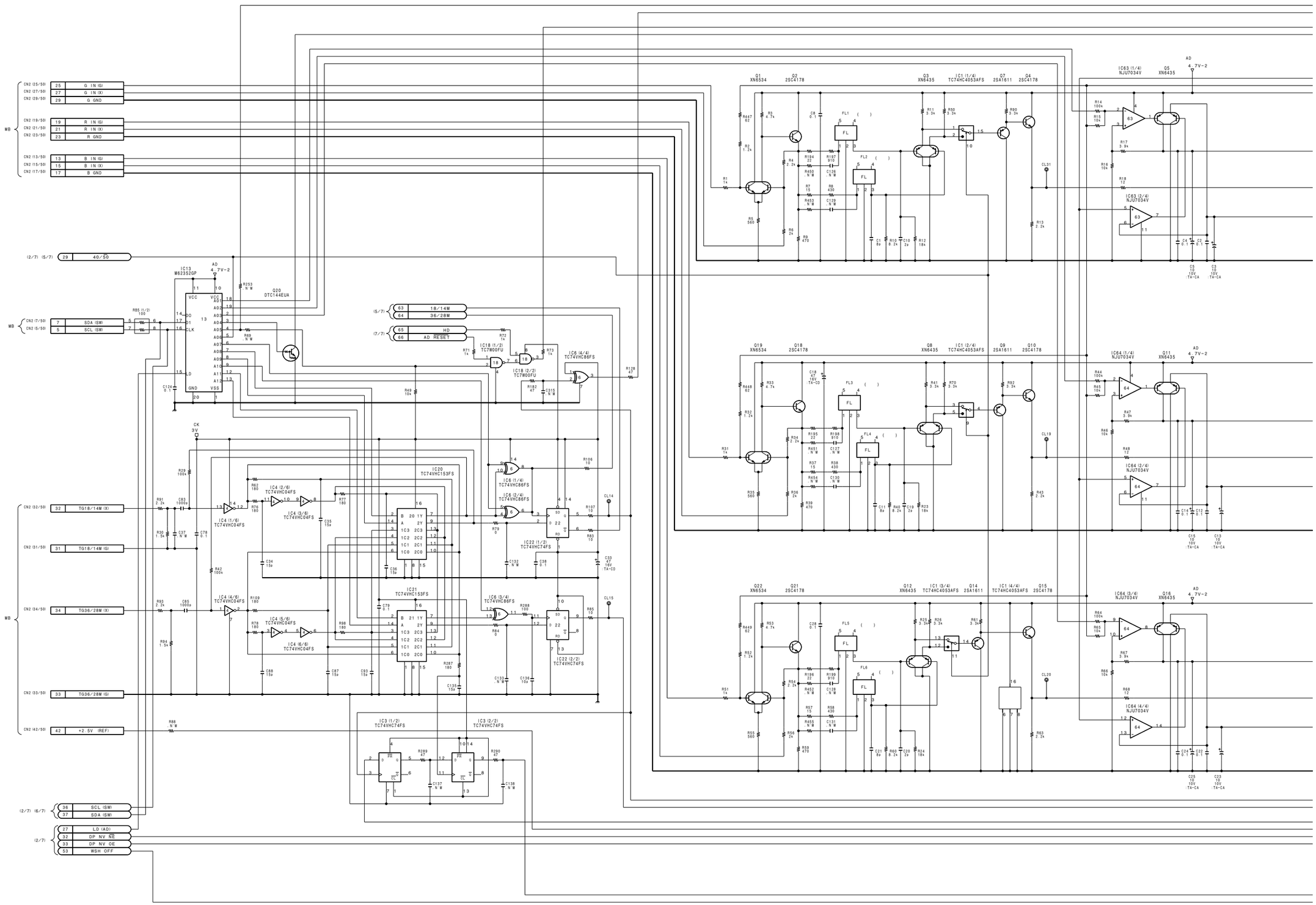

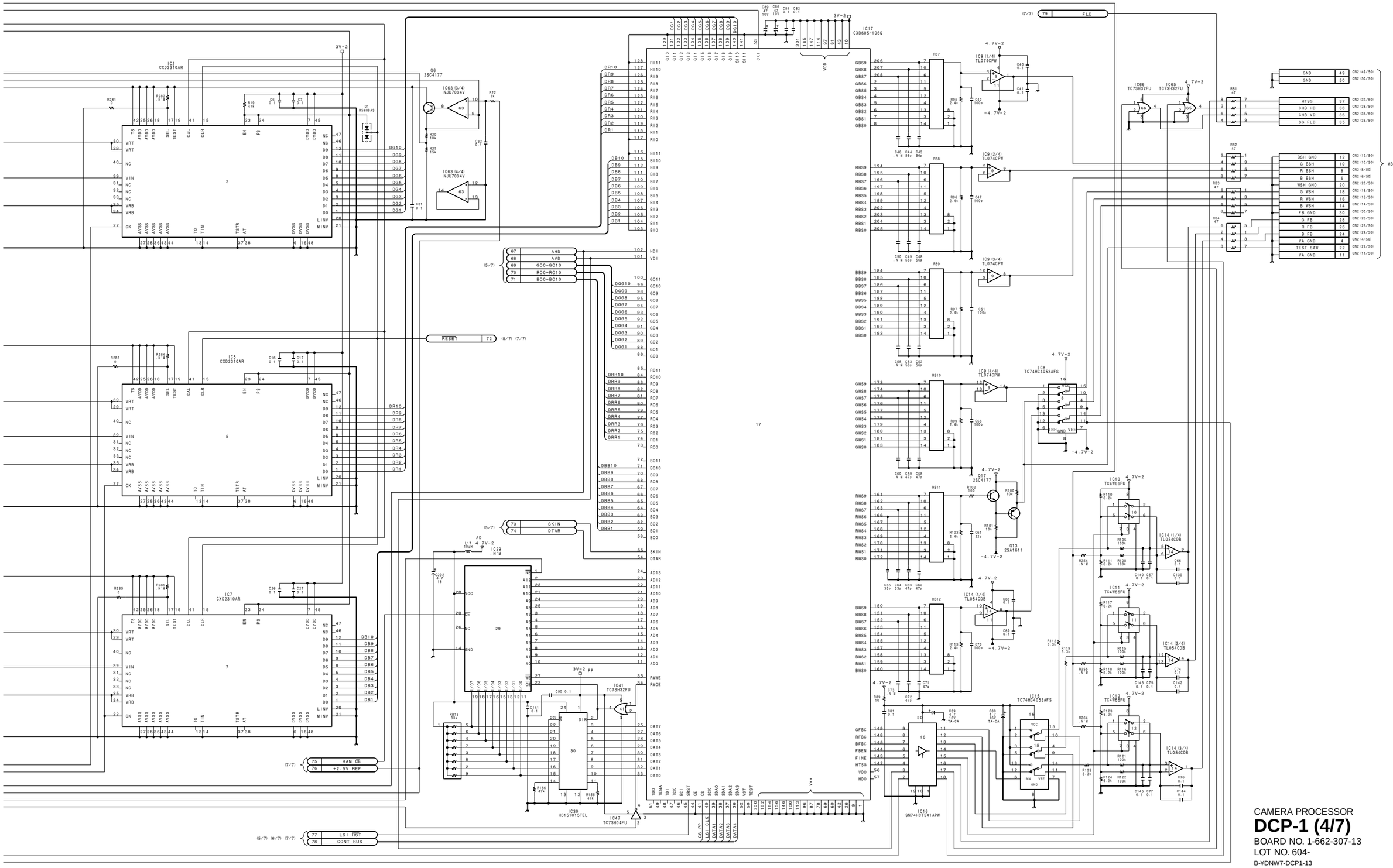

CAMERA PROCESSOR
DCP-1 (4/7)
BOARD NO. 1-662-307-13
LOT NO. 604-
B-¥DNW7-DCP1-13

DNW-7/90/90WS(SY):S/N 10001 and Higher
DNW-7/90/90WS(J):S/N 30001 and Higher
DNW-7P/90P/90WSP(SY):S/N 40001 and Higher

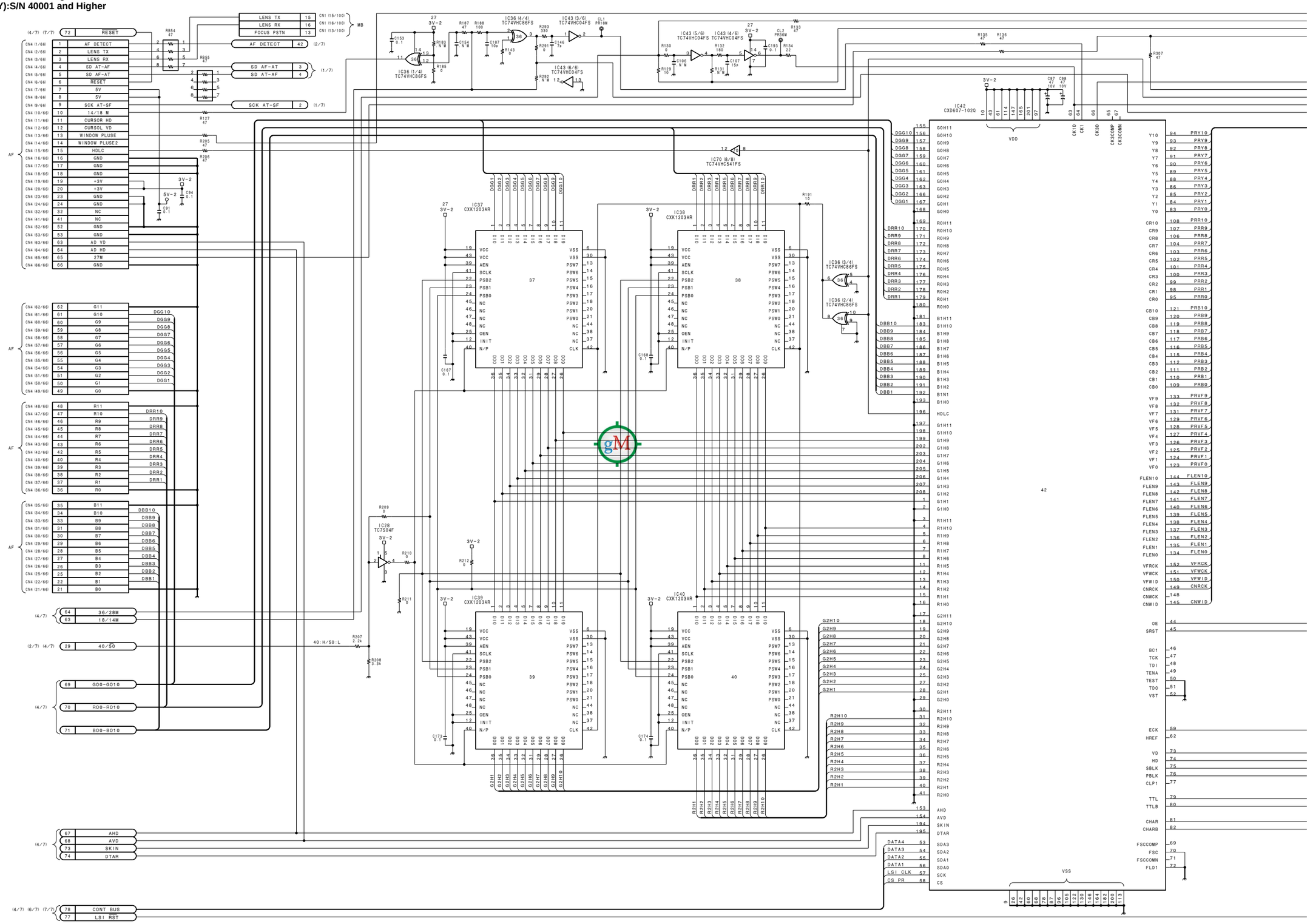

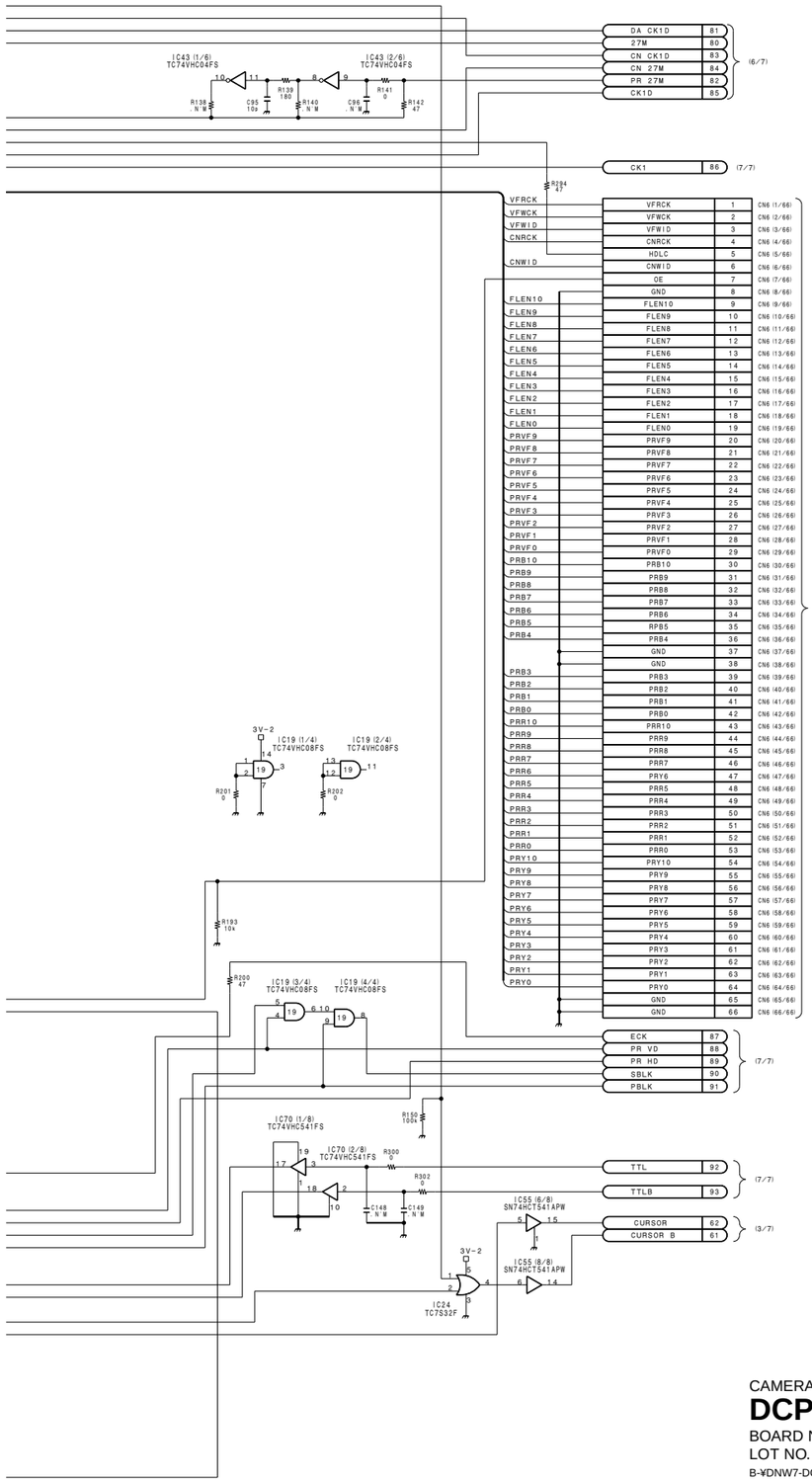

CAMERA PROCESSOR

DCP-1 (5/7)

BOARD NO. 1-662-307-13
LOT NO. 604-
B-¥DNW7-DCP1-13

DNW-7/90/90WS(SY):S/N 10001 and Higher
DNW-7/90/90WS(J):S/N 30001 and Higher
DNW-7P/90P/90WSP(SY):S/N 40001 and Higher

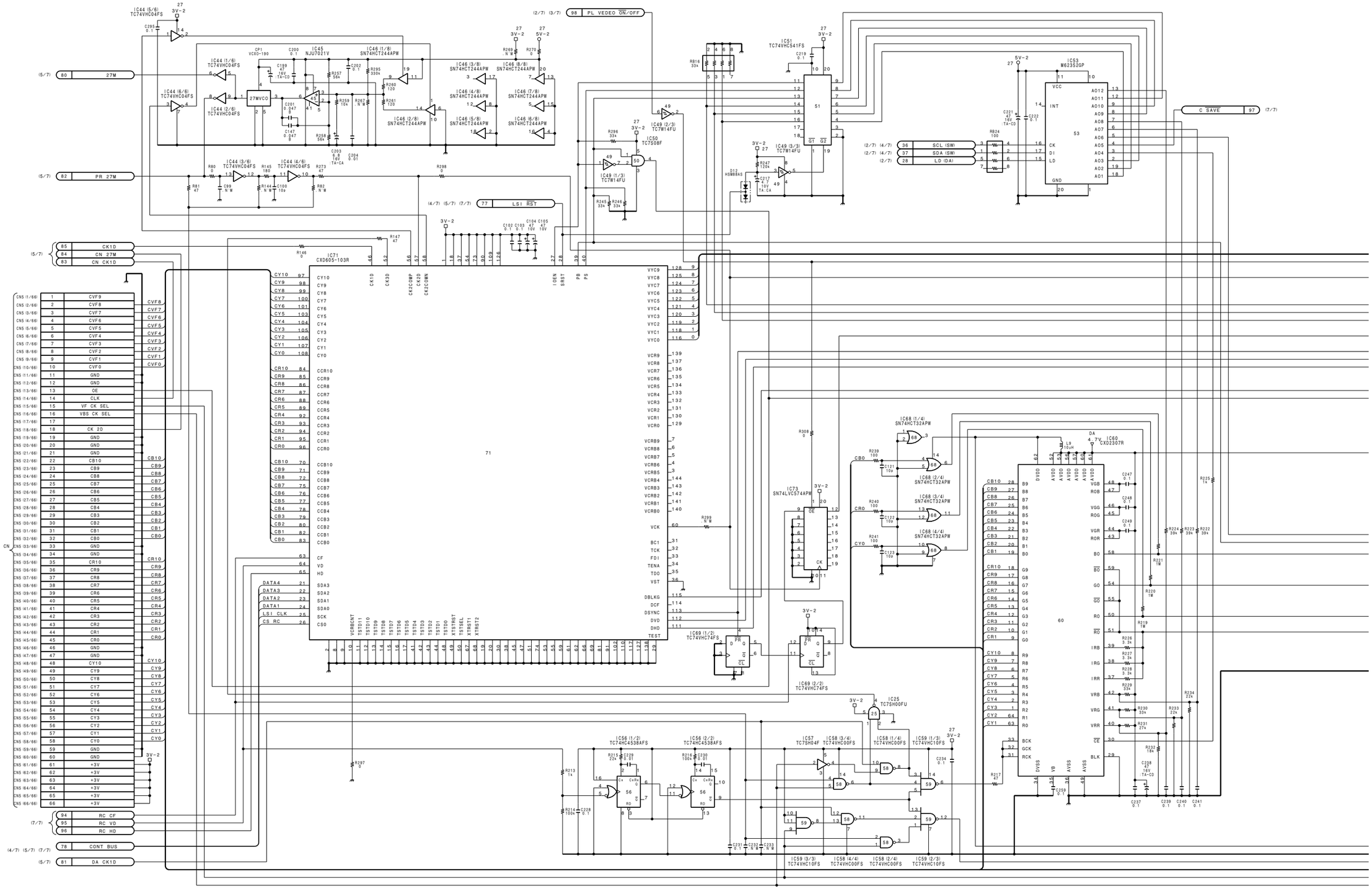

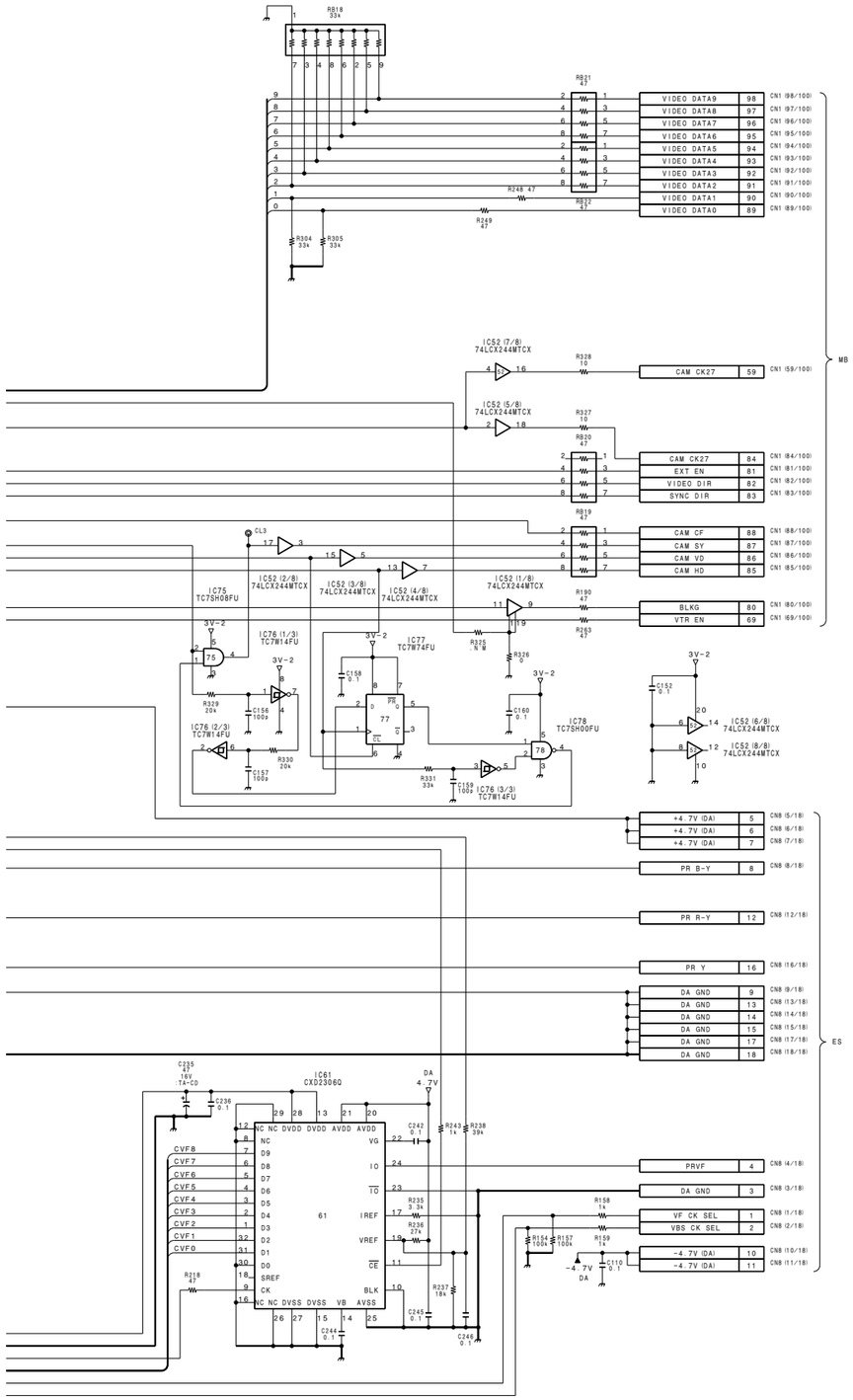

CAMERA PROCESSOR

DCP-1 (6/7)

BOARD NO. 1-662-307-13
LOT NO. 604-
B-¥DNW7-DCP1-13

DNW-7/90/90WS(SY):S/N 10001 and Higher
DNW-7/90/90WS(J):S/N 30001 and Higher
DNW-7P/90P/90WSP(SY):S/N 40001 and Higher

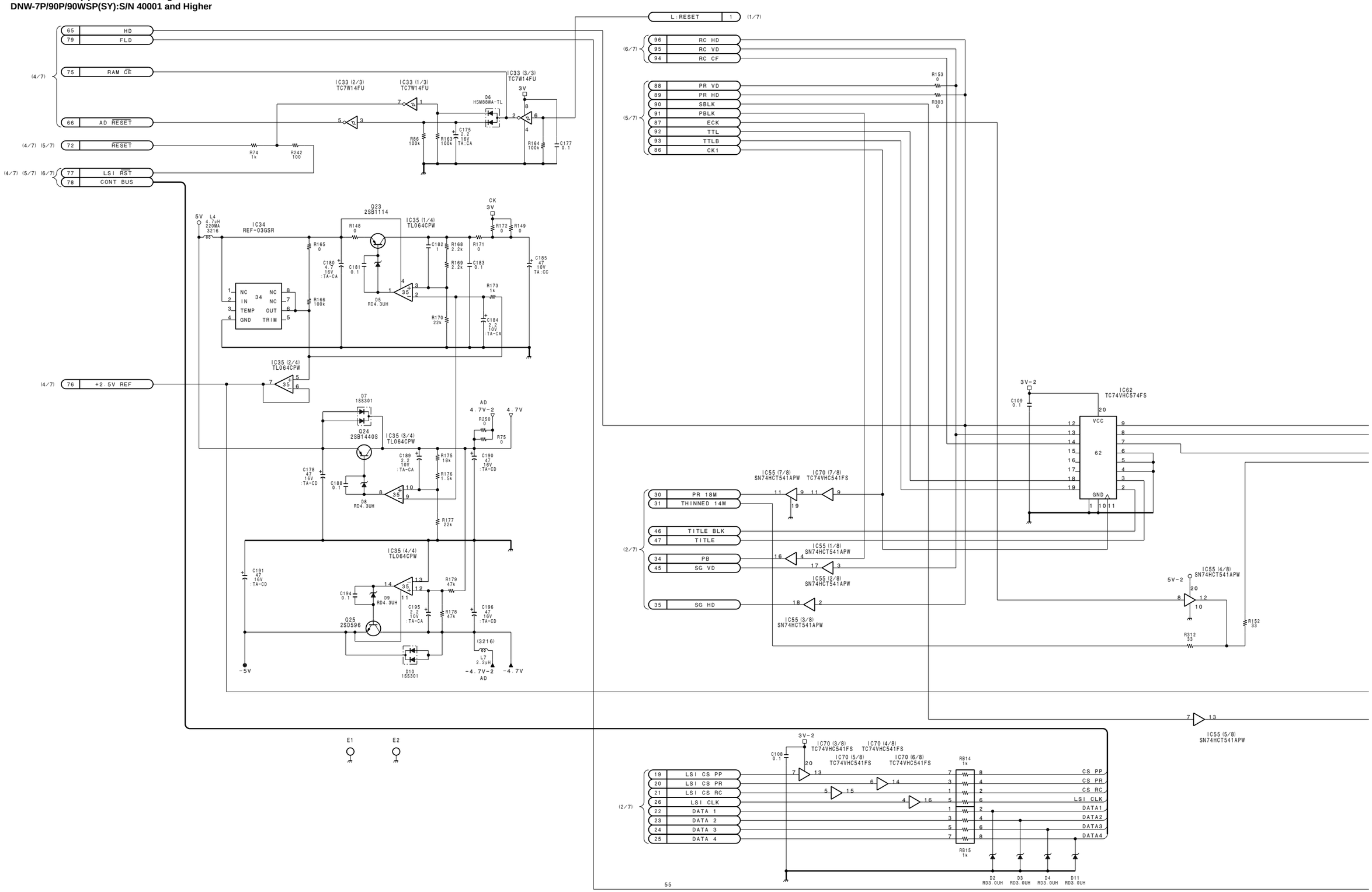

http://getMANUAL.com

DNW-7/90(SY):S/N 10001 and Higher
DNW-7/90(J):S/N 30001 and Higher
DNW-7P/90P(SY):S/N 40001 and Higher

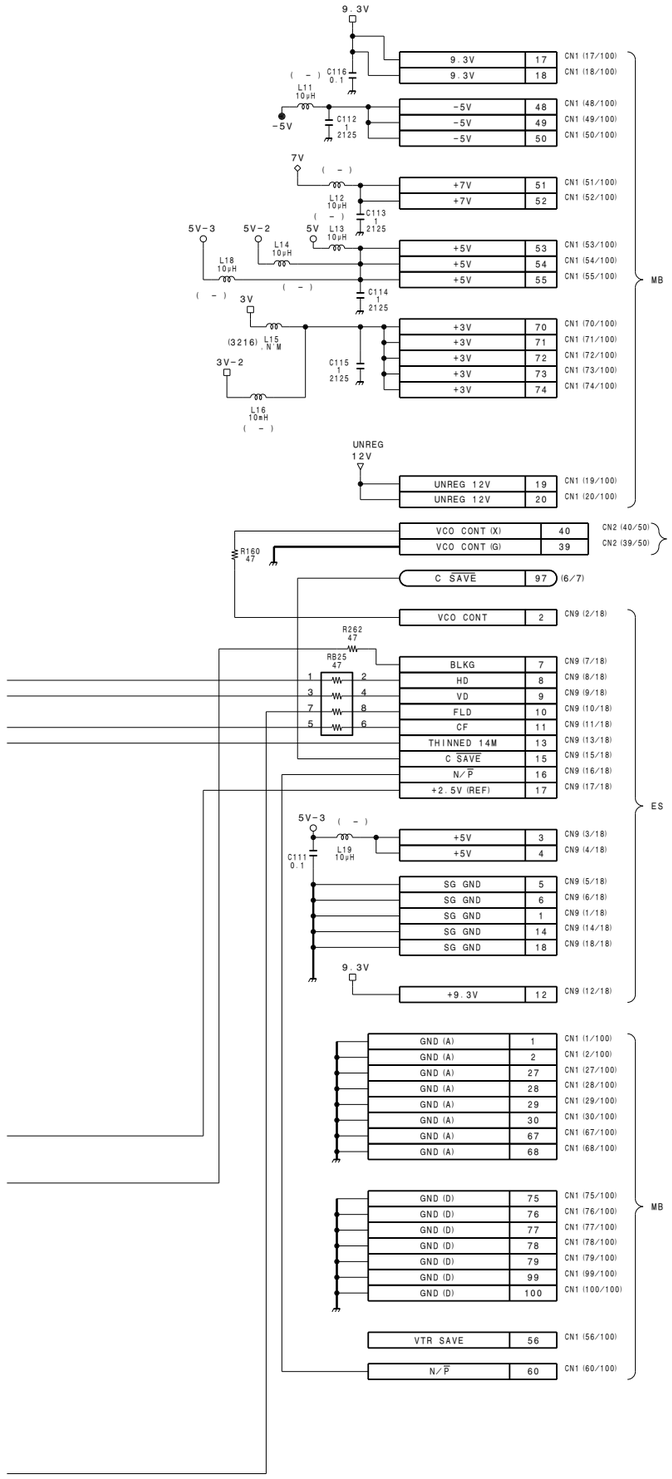

CAMERA PROCESSOR
DCP-1 (7/7)
BOARD NO. 1-662-307-13
LOT NO. 604-
B-¥DNW7-DCP1-13

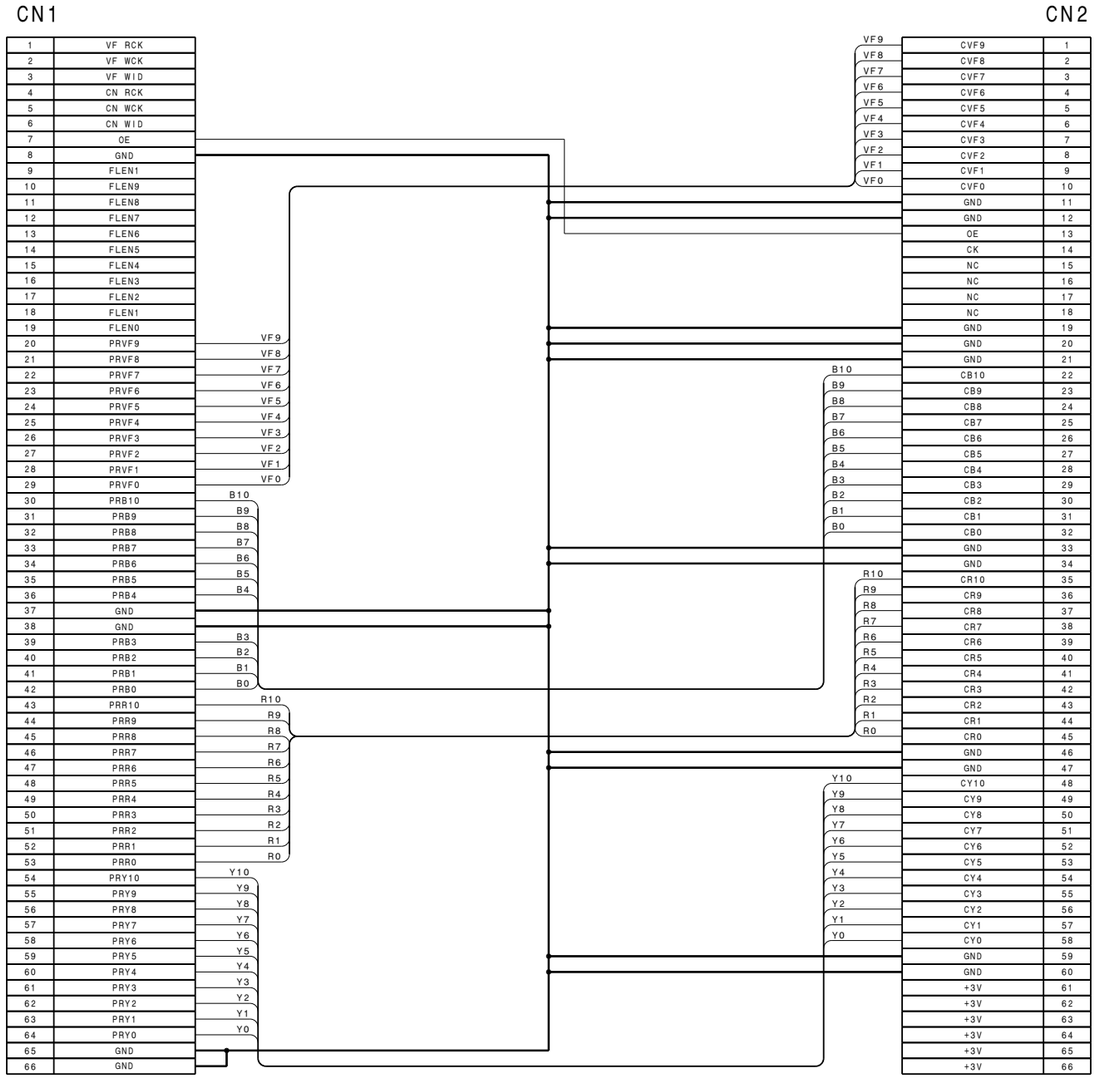

CONNECTOR BOARD FOR DCP-1
CN-1193
BOARD NO. 1-662-308-11
LOT NO. 604-
B-¥DNW7-CN1193-11

DNV-5(SY):S/N 10001 and Higher
DNV-5(J):S/N 30001 and Higher
DNW-7/90/90WS(SY):S/N 10001 and Higher
DNW-7/90/90WS(J):S/N 30001 and Higher
DNW-7P/90P/90WSP(SY):S/N 40001 and Higher

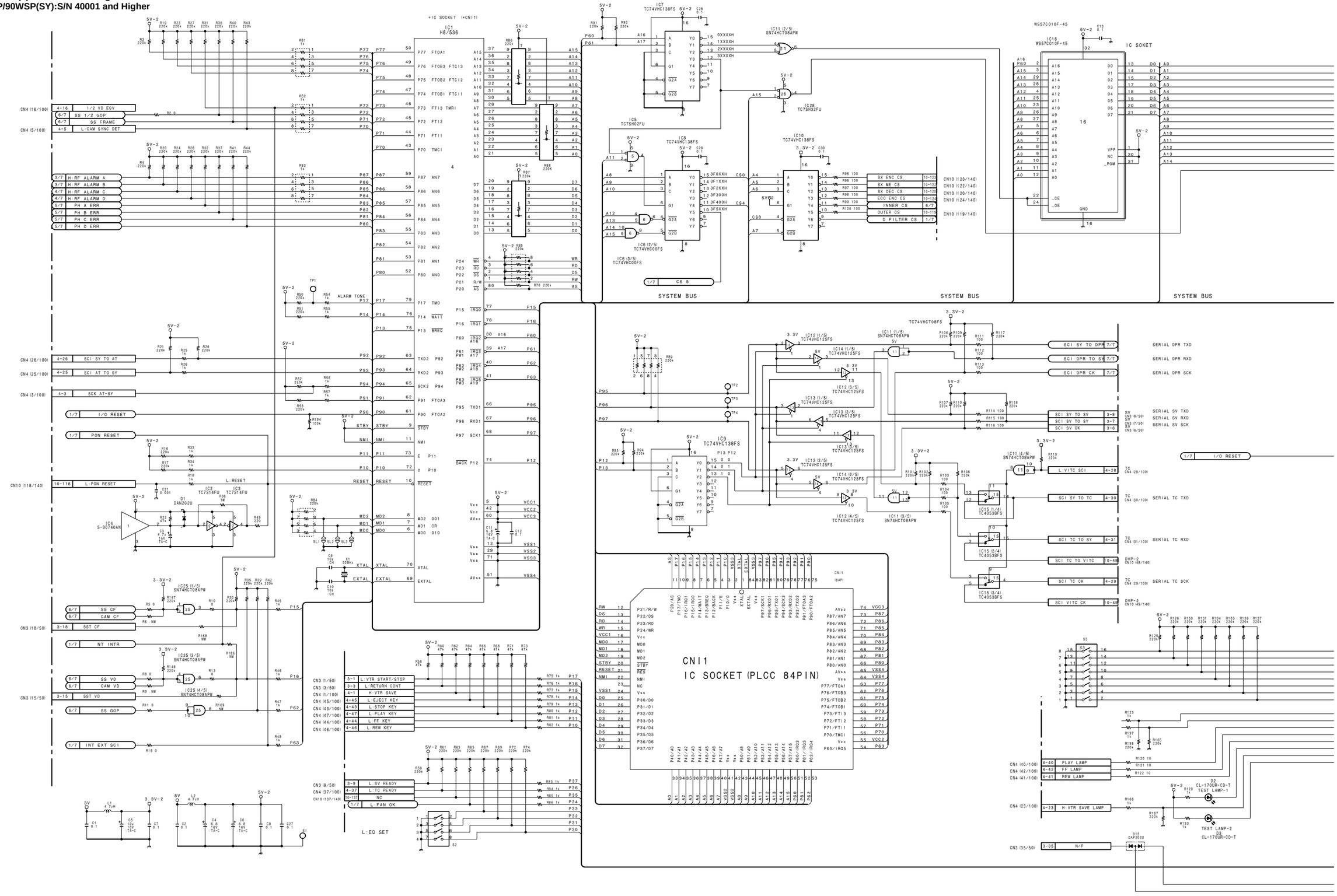

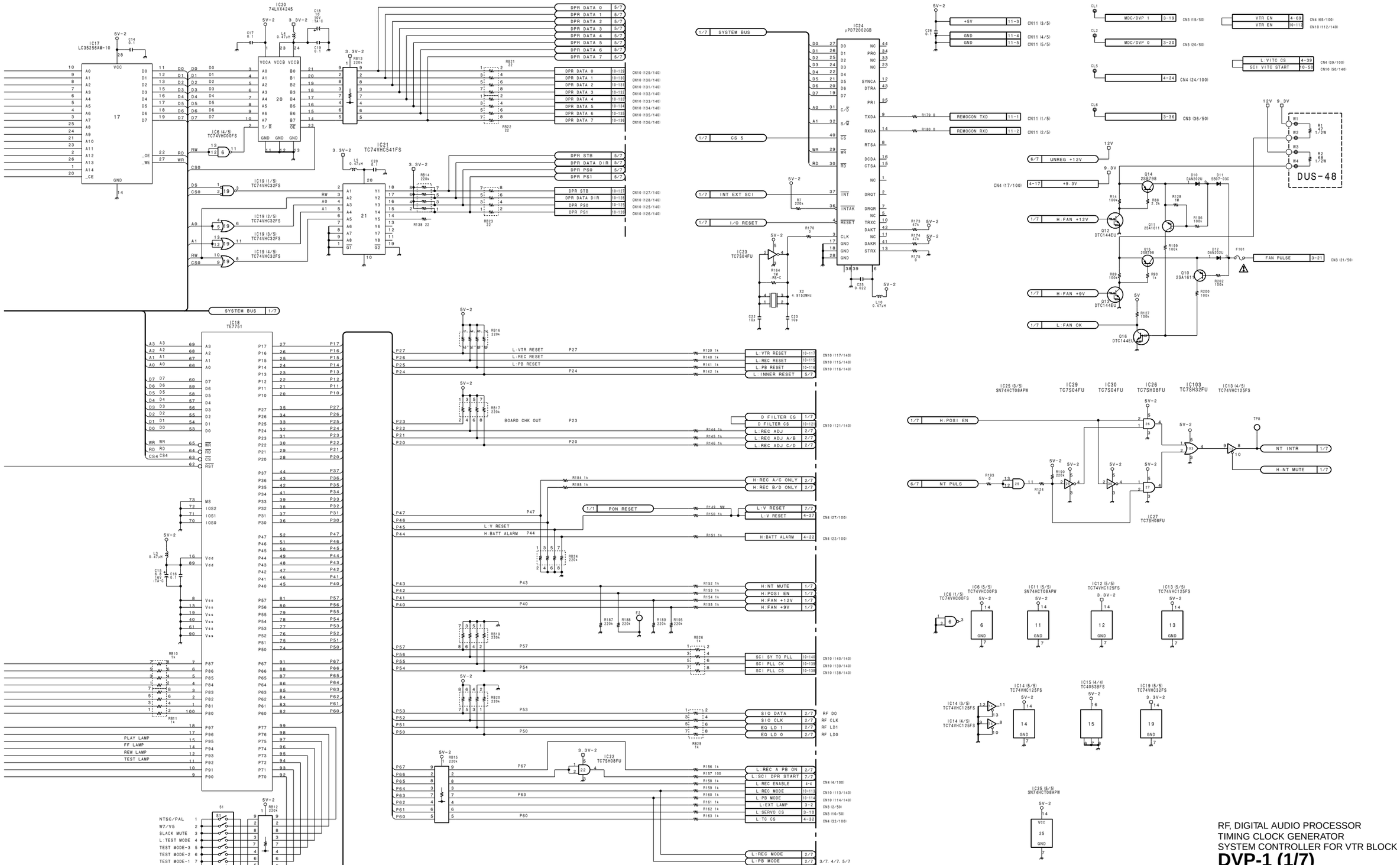

DNV-5
DNW-7/90/90WS

5-21 5-21

RF, DIGITAL AUDIO PROCESSOR
TIMING CLOCK GENERATOR
SYSTEM CONTROLLER FOR VTR BLOCK

DVP-1 (1/7)

BOARD NO. 1-662-305-11
LOT NO. 604-
B-¥DNW7-DVP1-11

DNV-5(SY):S/N 10001 and Higher
DNV-5(J):S/N 30001 and Higher
DNW-7/90/90WS(SY):S/N 10001 and Higher
DNW-7/90/90WS(J):S/N 30001 and Higher
DNW-7P/90P/90WSP(SY):S/N 40001 and Higher

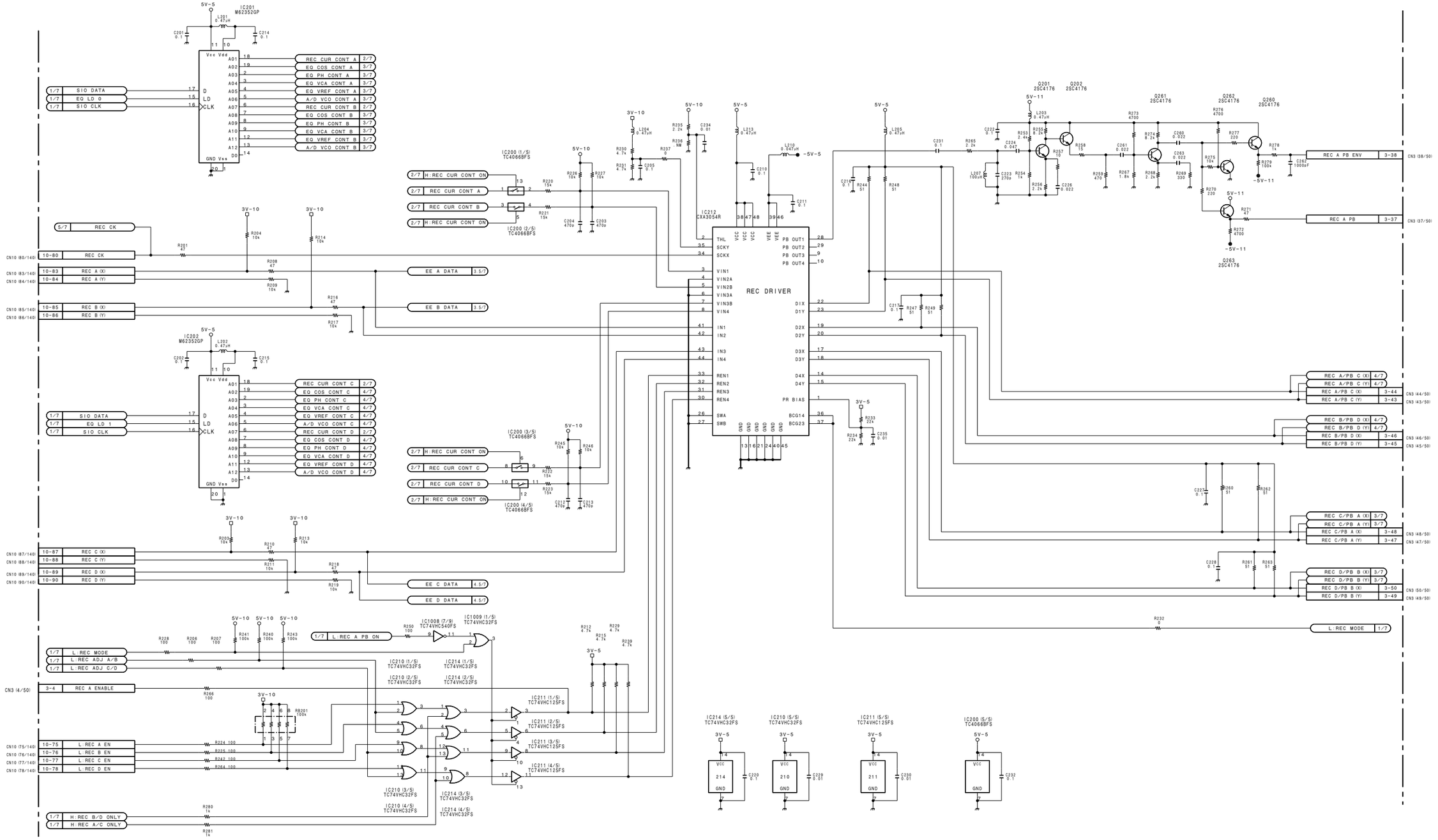

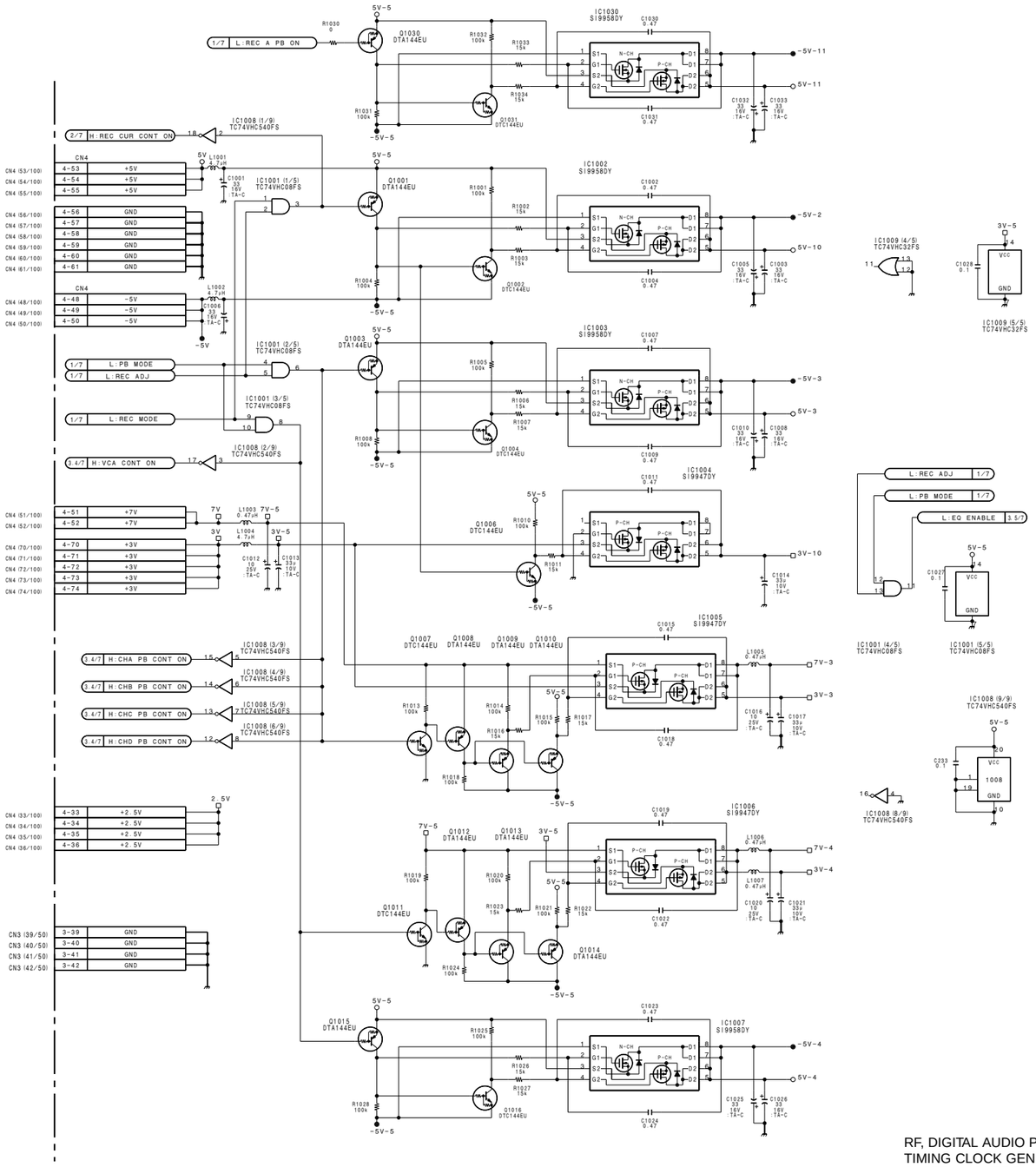

RF, DIGITAL AUDIO PROCESSOR
TIMING CLOCK GENERATOR
SYSTEM CONTROLLER FOR VTR BLOCK

DVP-1 (2/7)

BOARD NO. 1-662-305-11
LOT NO. 604-
B-¥DNW7-DVP1-11

DNV-5(SY):S/N 10001 and Higher
DNV-5(J):S/N 30001 and Higher
DNW-7/90/90WS(SY):S/N 10001 and Higher
DNW-7/90/90WS(J):S/N 30001 and Higher
DNW-7P/90P/90WSP(SY):S/N 40001 and Higher

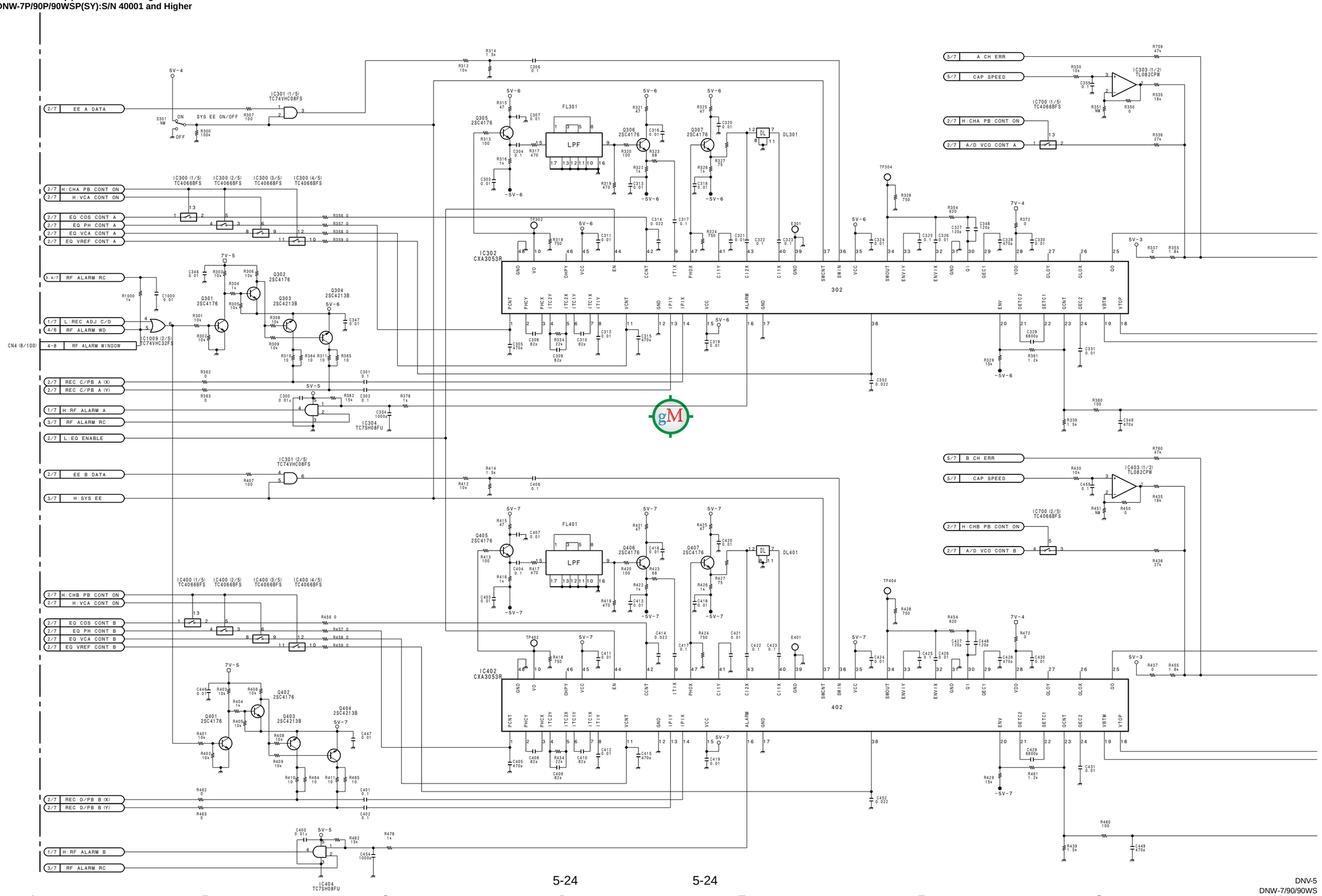

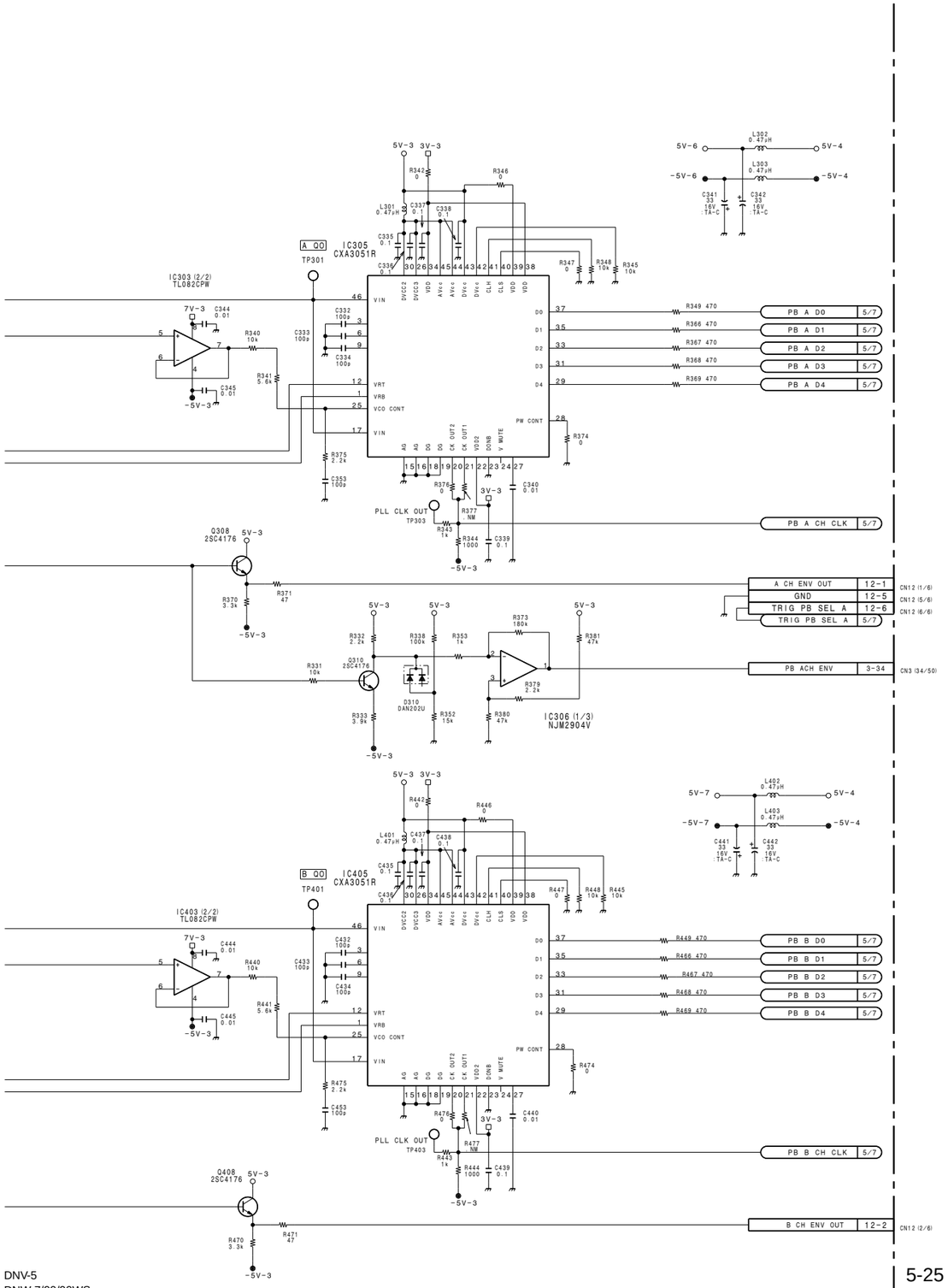

RF, DIGITAL AUDIO PROCESSOR
TIMING CLOCK GENERATOR
SYSTEM CONTROLLER FOR VTR BLOCK

DVP-1 (3/7)

BOARD NO. 1-662-305-11
LOT NO. 604-
B-¥DNW7-DVP1-11

DNV-5(SY):S/N 10001 and Higher
DNV-5(J):S/N 30001 and Higher
DNW-7/90/90WS(SY):S/N 10001 and Higher
DNW-7/90/90WS(J):S/N 30001 and Higher
DNW-7P/90P/90WSP(SY):S/N 40001 and Higher

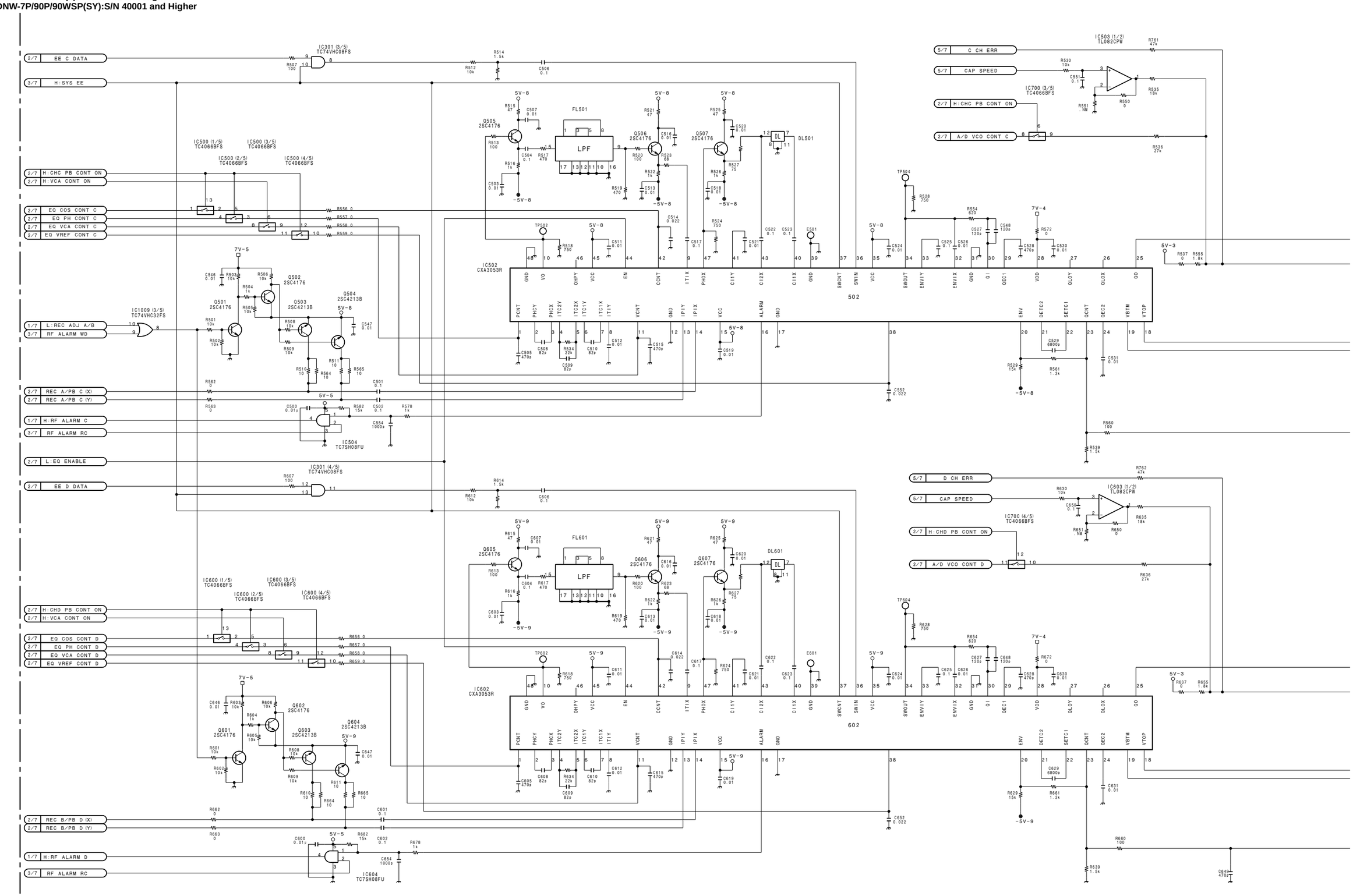

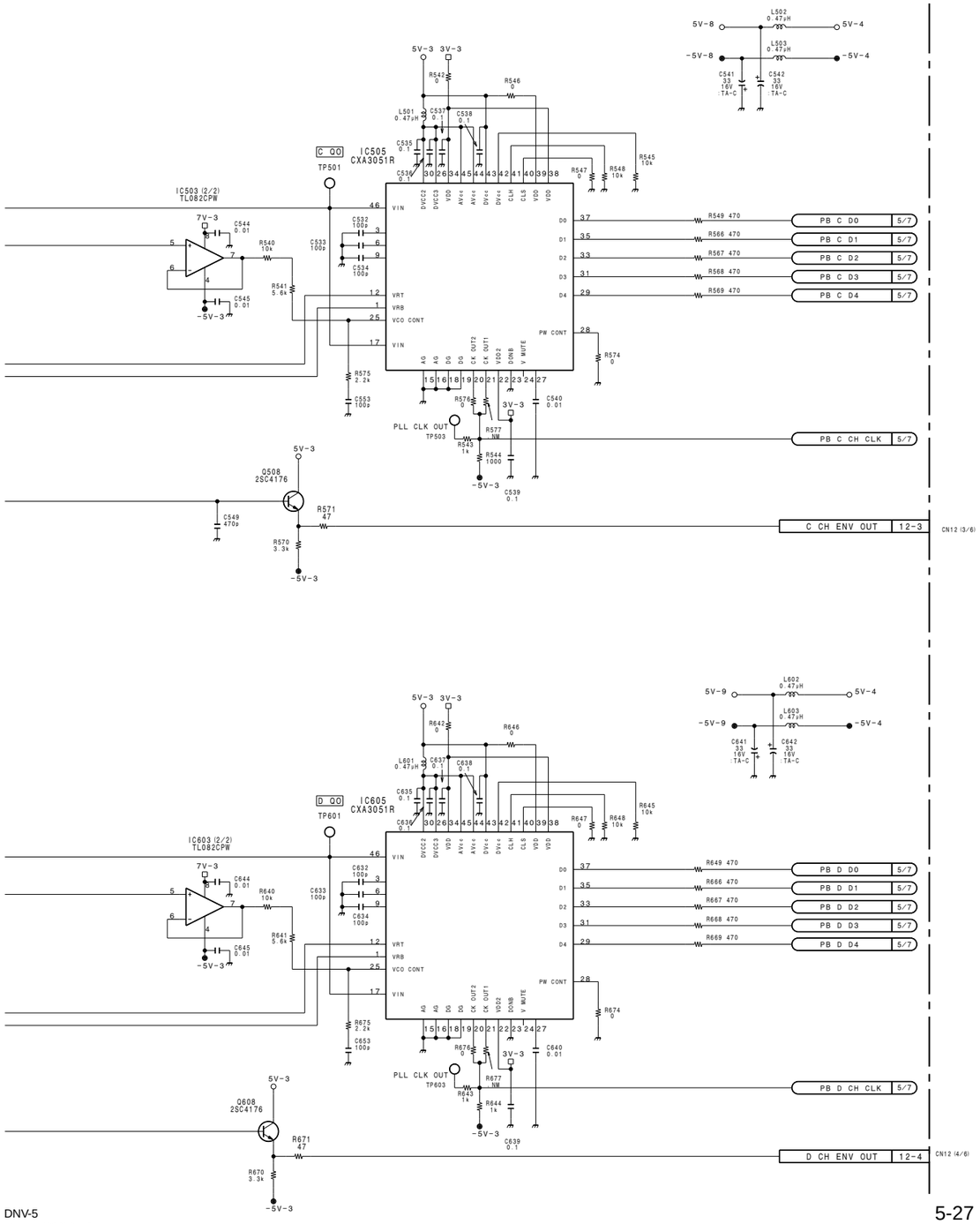

RF, DIGITAL AUDIO PROCESSOR
TIMING CLOCK GENERATOR
SYSTEM CONTROLLER FOR VTR BLOCK

DVP-1 (4/7)

BOARD NO. 1-662-305-11
LOT NO. 604-
B-¥DNW7-DVP1-11

DNV-5
DNW-7/90/90WS

DNV-5(SY):S/N 10001 and Higher
DNV-5(J):S/N 30001 and Higher
DNW-7/90/90WS(SY):S/N 10001 and Higher
DNW-7/90/90WS(J):S/N 30001 and Higher
DNW-7P/90P/90WSP(SY):S/N 40001 and Higher

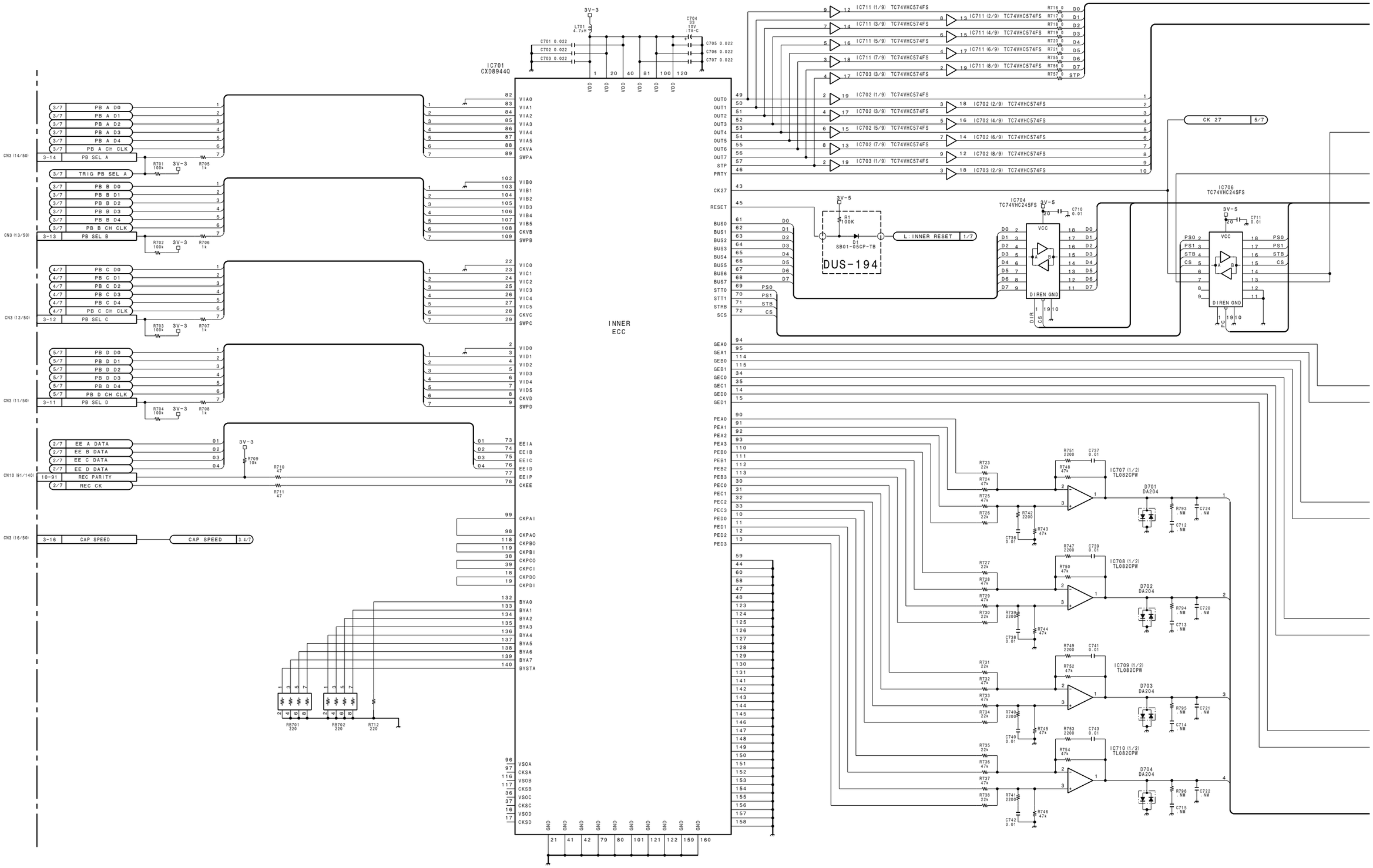

http://getMANUAL.com

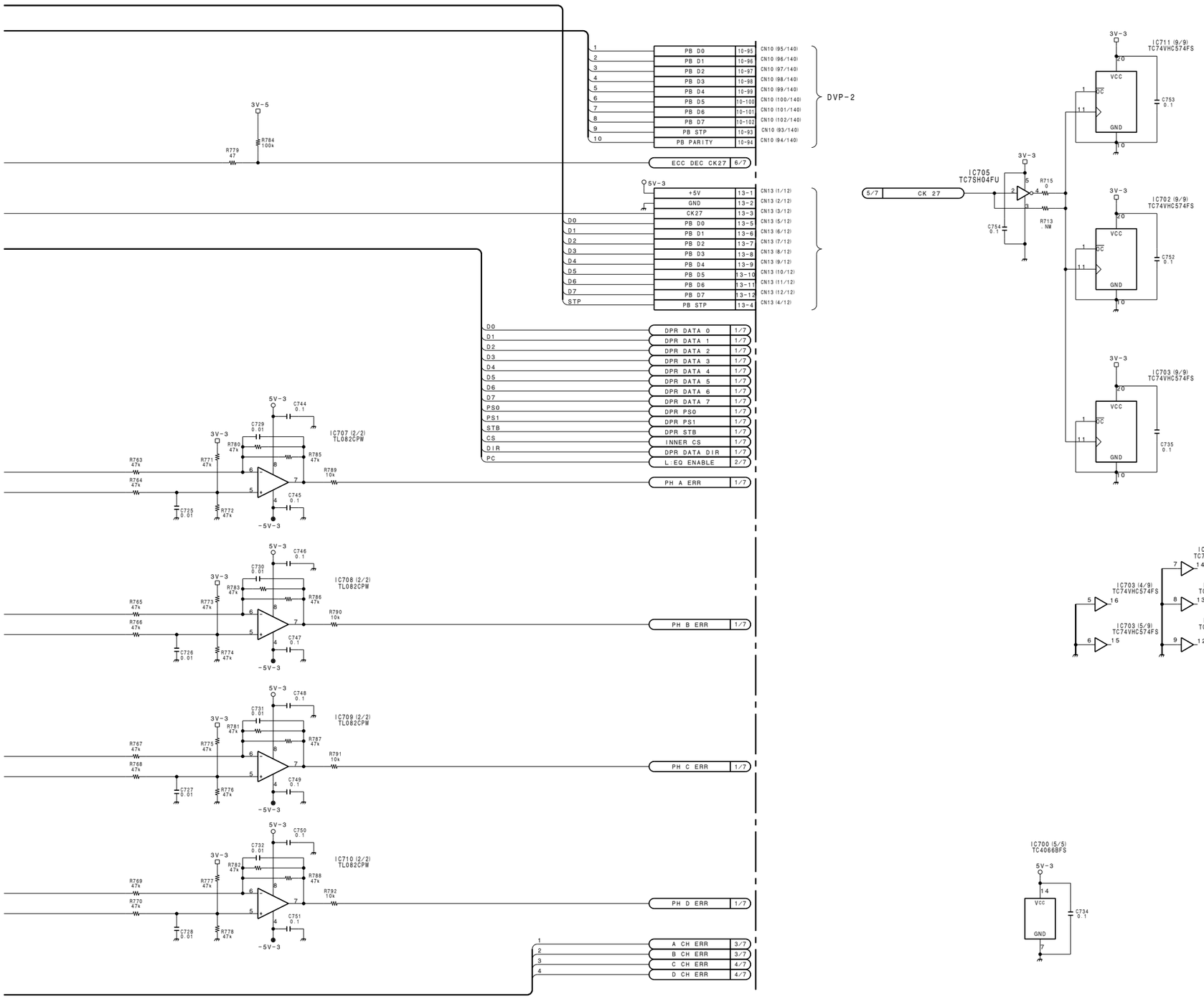

RF, DIGITAL AUDIO PROCESSOR
TIMING CLOCK GENERATOR
SYSTEM CONTROLLER FOR VTR BLOCK

DVP-1 (5/7)

BOARD NO. 1-662-305-11
LOT NO. 604-
B-¥DNW7-DVP1-11

DNV-5(SY):S/N 10001 and Higher
DNV-5(J):S/N 30001 and Higher
DNW-7/90/90WS(SY):S/N 10001 and Higher
DNW-7/90/90WS(J):S/N 30001 and Higher
DNW-7P/90P/90WSP(SY):S/N 40001 and Higher

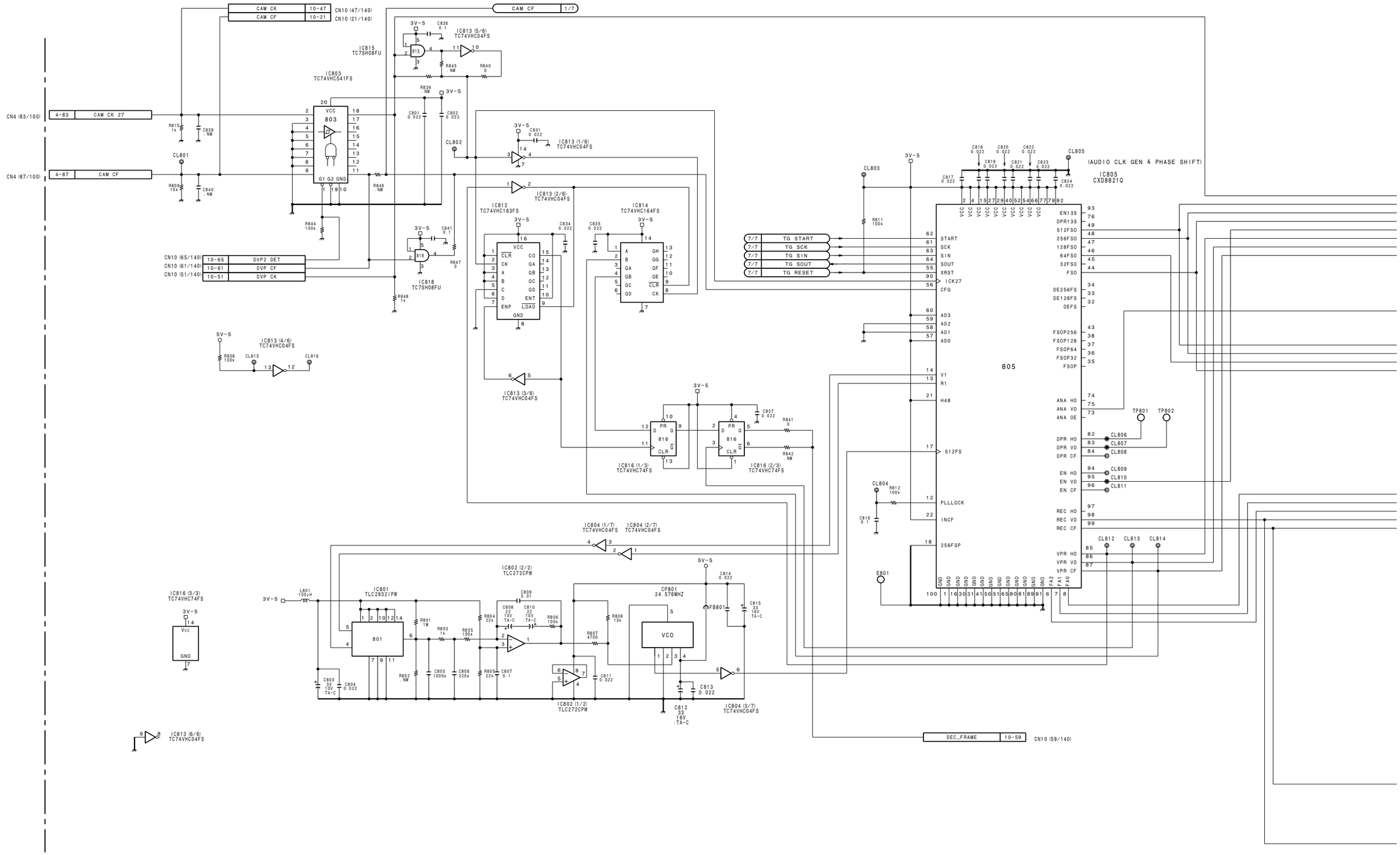

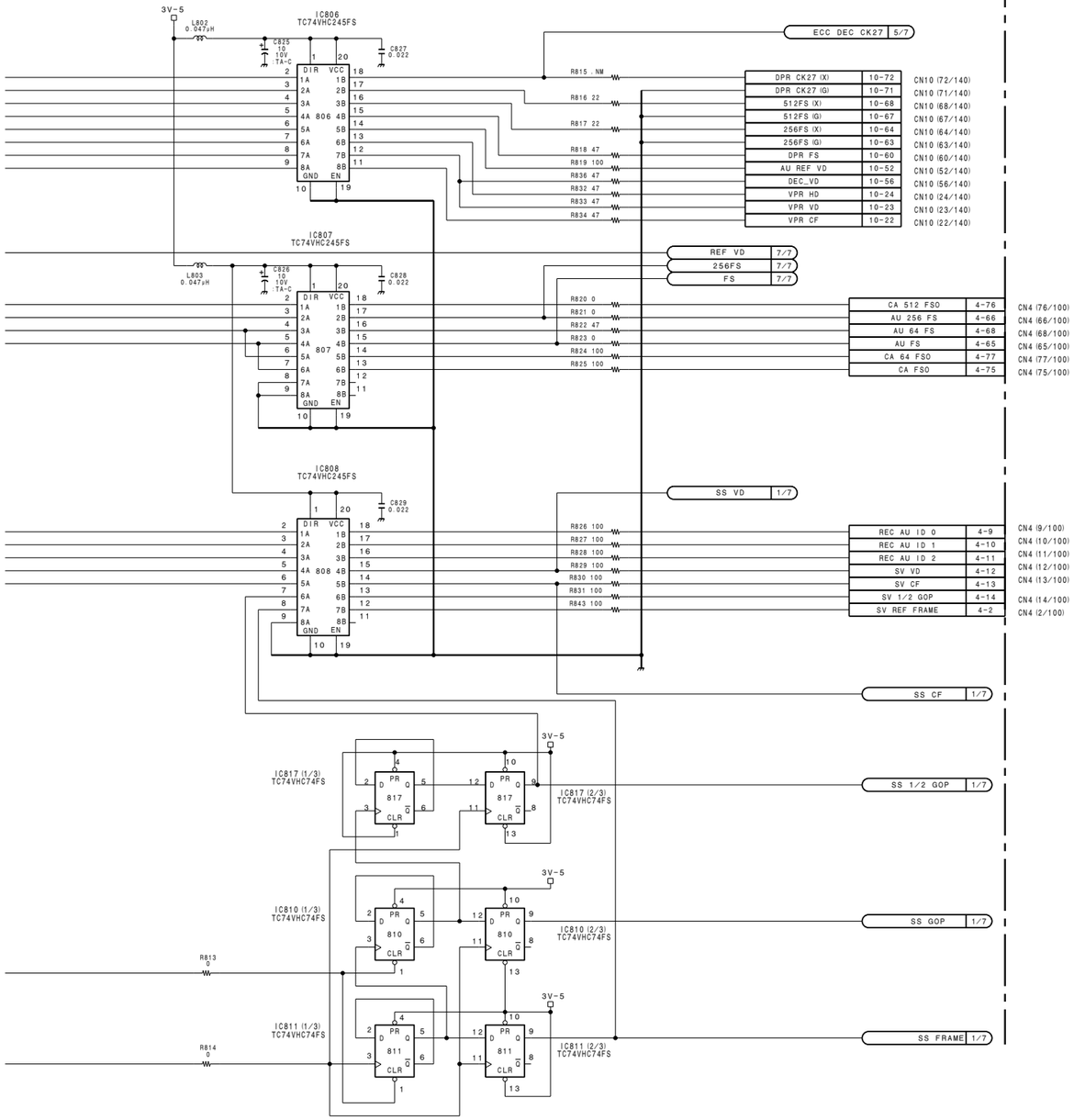

RF, DIGITAL AUDIO PROCESSOR
TIMING CLOCK GENERATOR
SYSTEM CONTROLLER FOR VTR BLOCK

DVP-1 (6/7)

BOARD NO. 1-662-305-11
LOT NO. 604-
B-¥DNW7-DVP1-11

DNV-5(SY):S/N 10001 and Higher
DNV-5(J):S/N 30001 and Higher
DNW-7/90/90WS(SY):S/N 10001 and Higher
DNW-7/90/90WS(J):S/N 30001 and Higher
DNW-7P/90P/90WSP(SY):S/N 40001 and Higher

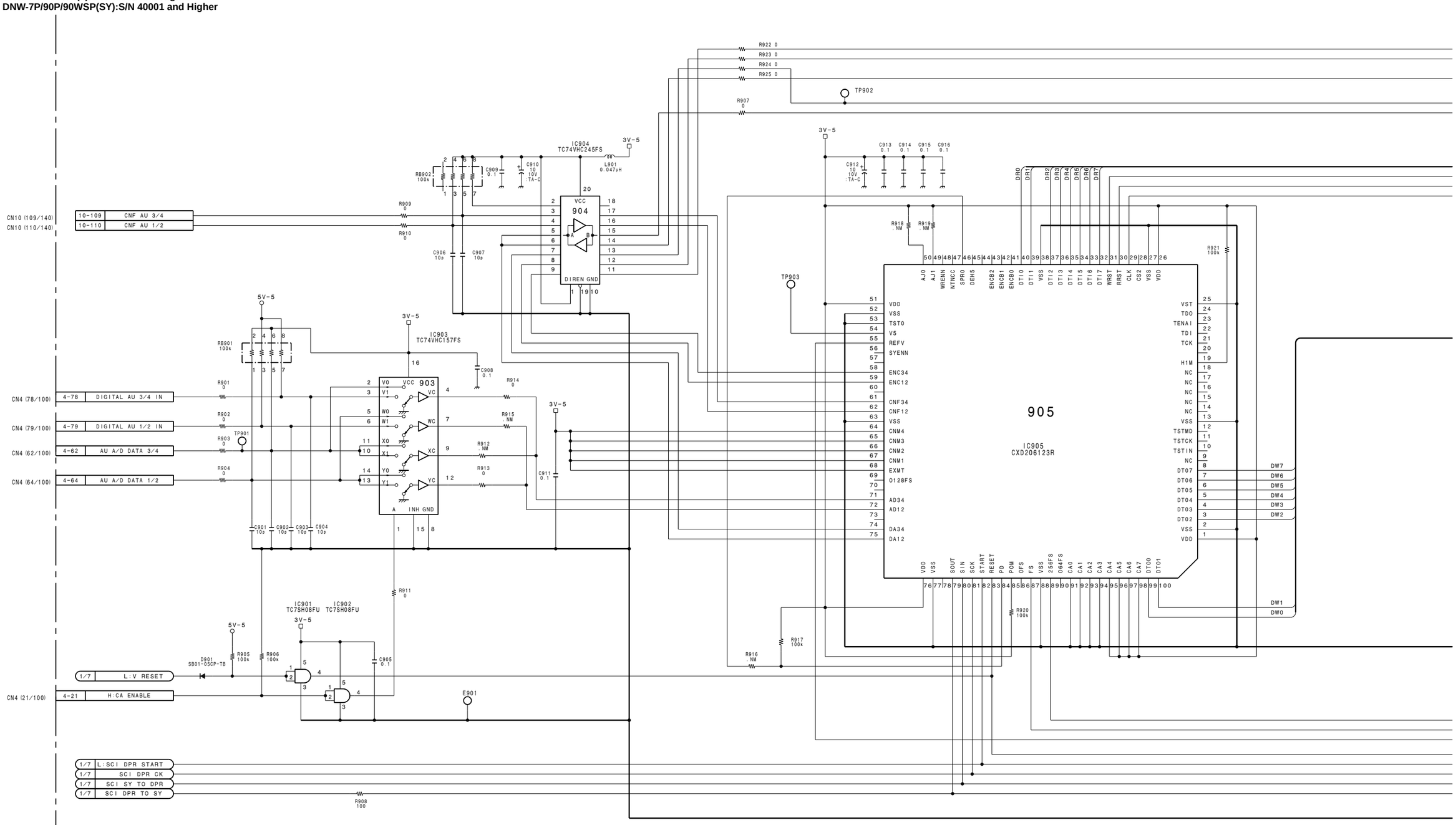

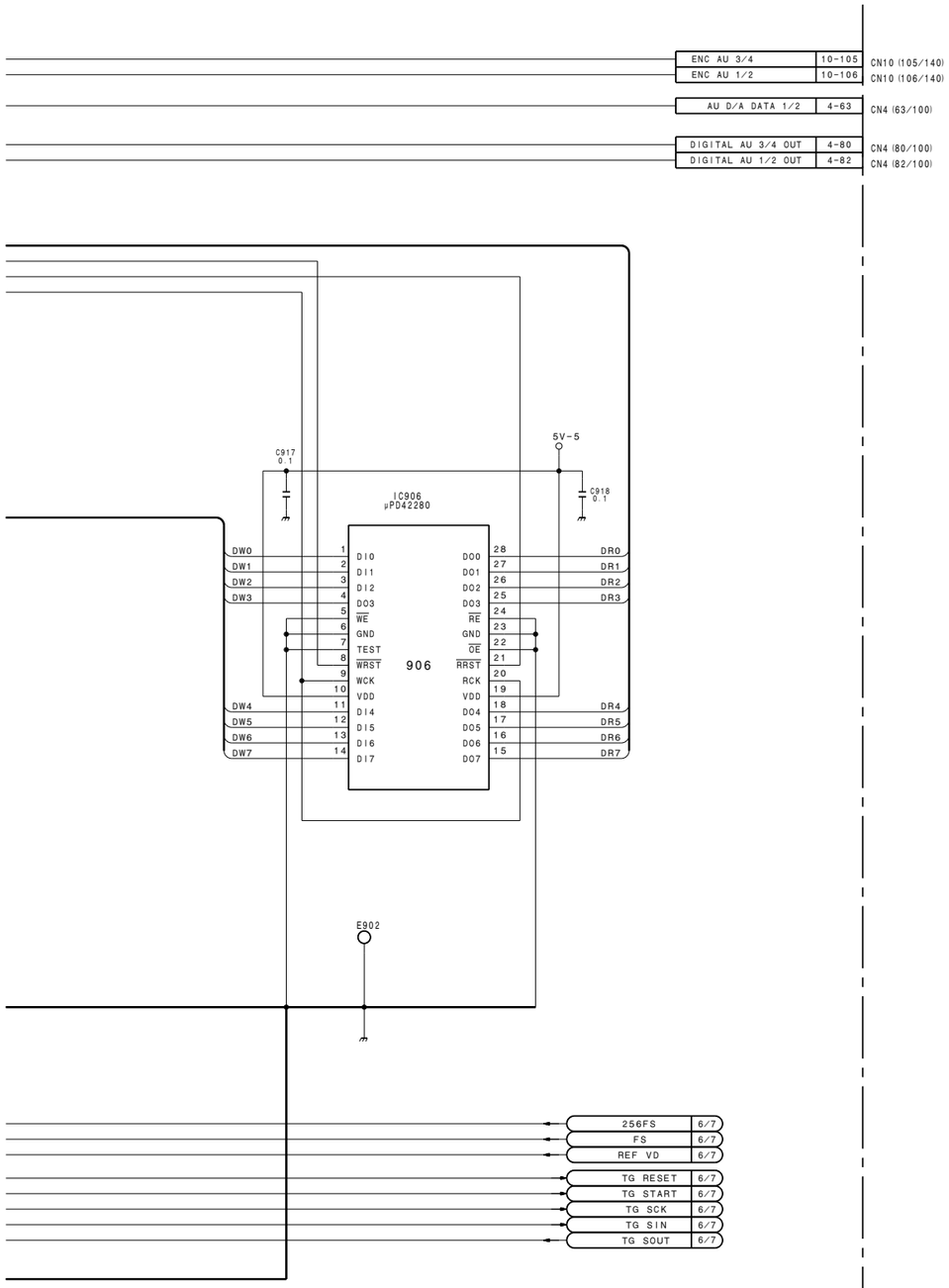

RF, DIGITAL AUDIO PROCESSOR
TIMING CLOCK GENERATOR
SYSTEM CONTROLLER FOR VTR BLOCK

DVP-1 (7/7)

BOARD NO. 1-662-305-11
LOT NO. 604-
B-¥DNW7-DVP1-11

DNV-5(SY):S/N 10001 and Higher
DNV-5(J):S/N 30001 and Higher
DNW-7/90/90WS(SY):S/N 10001 and Higher
DNW-7/90/90WS(J):S/N 30001 and Higher
DNW-7P/90P/90WSP(SY):S/N 40001 and Higher

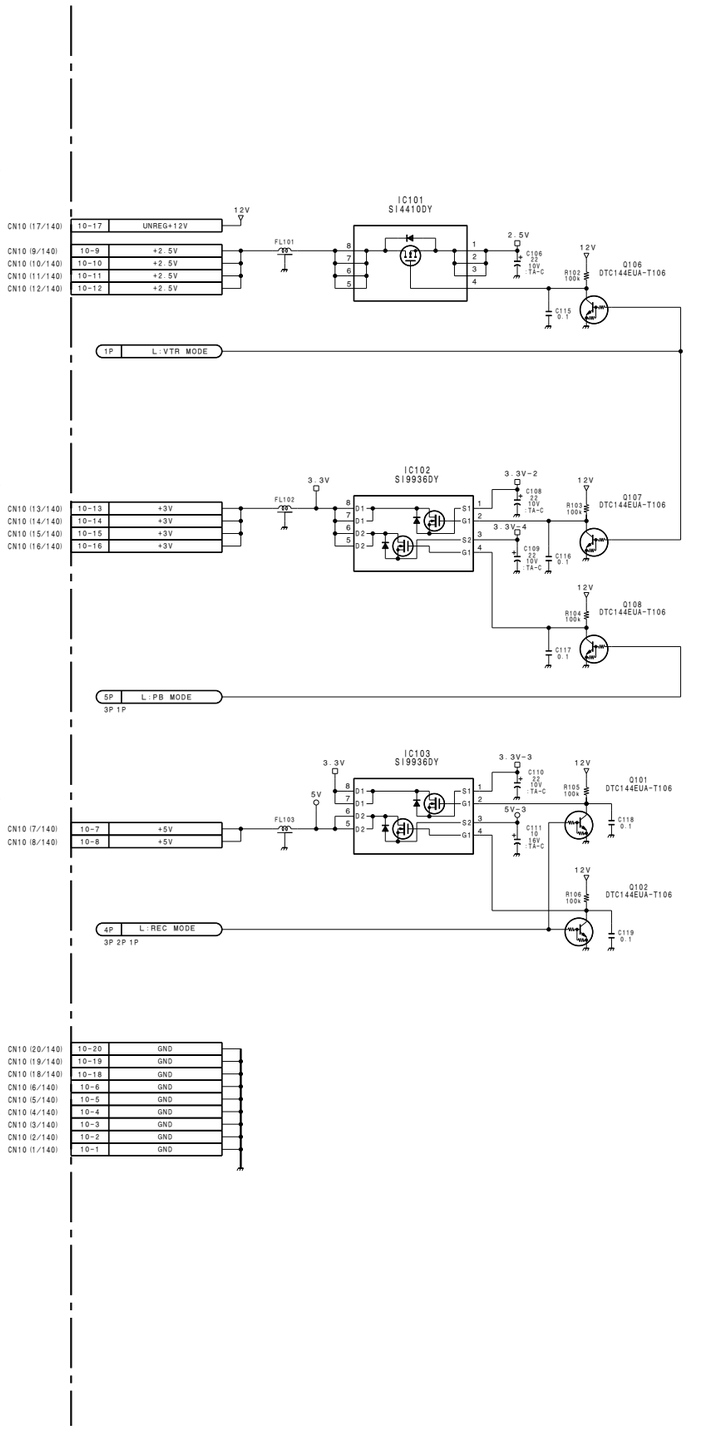

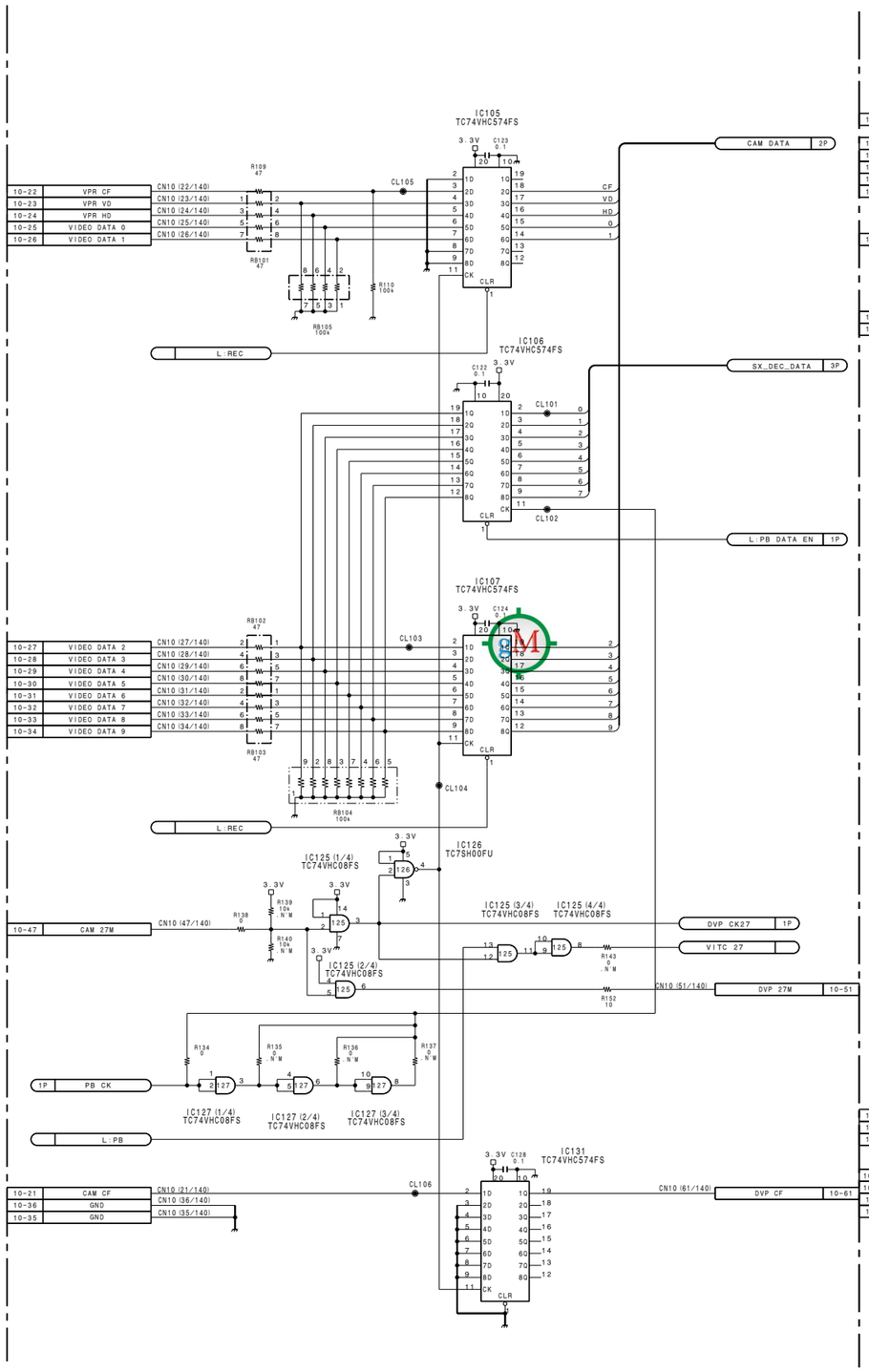

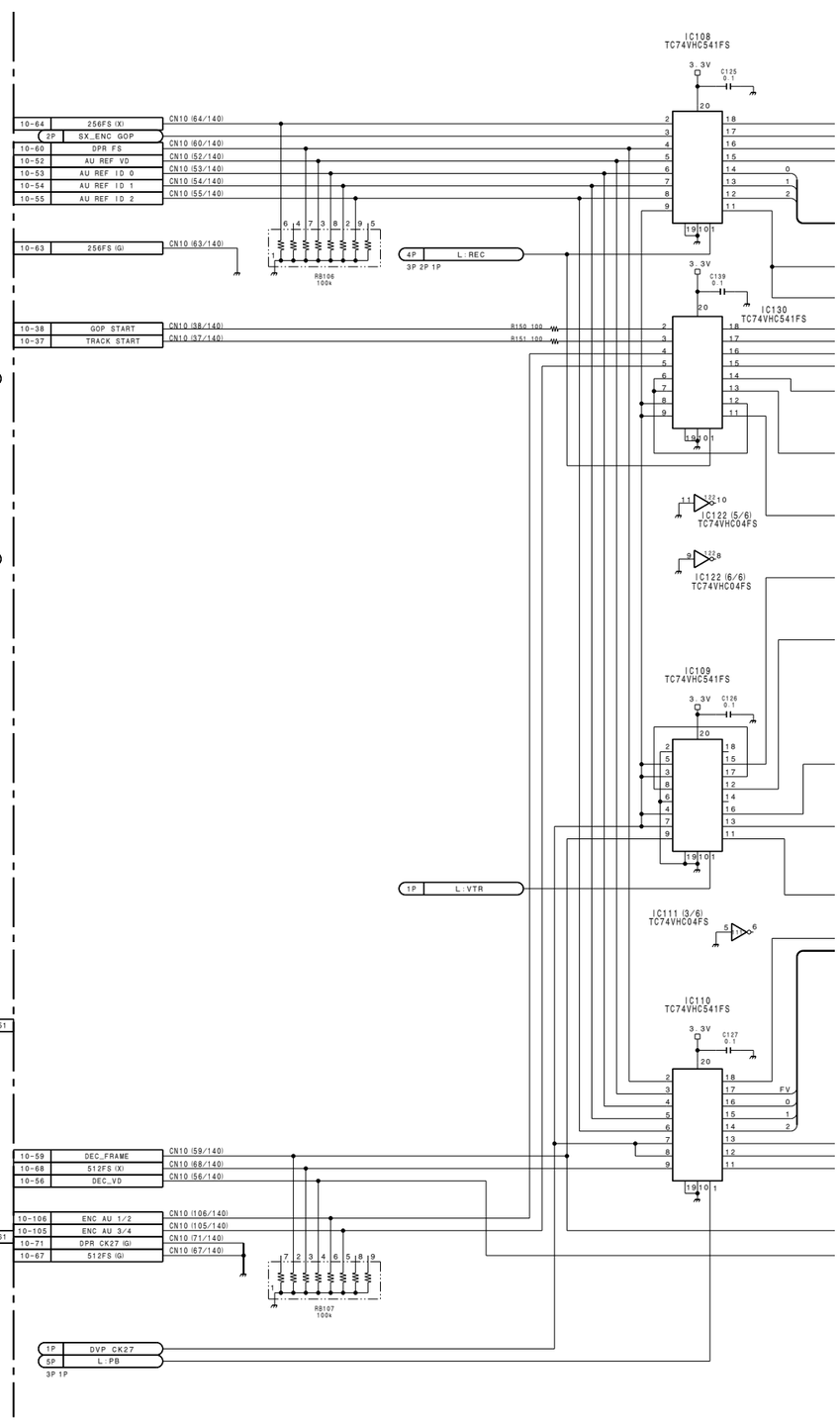

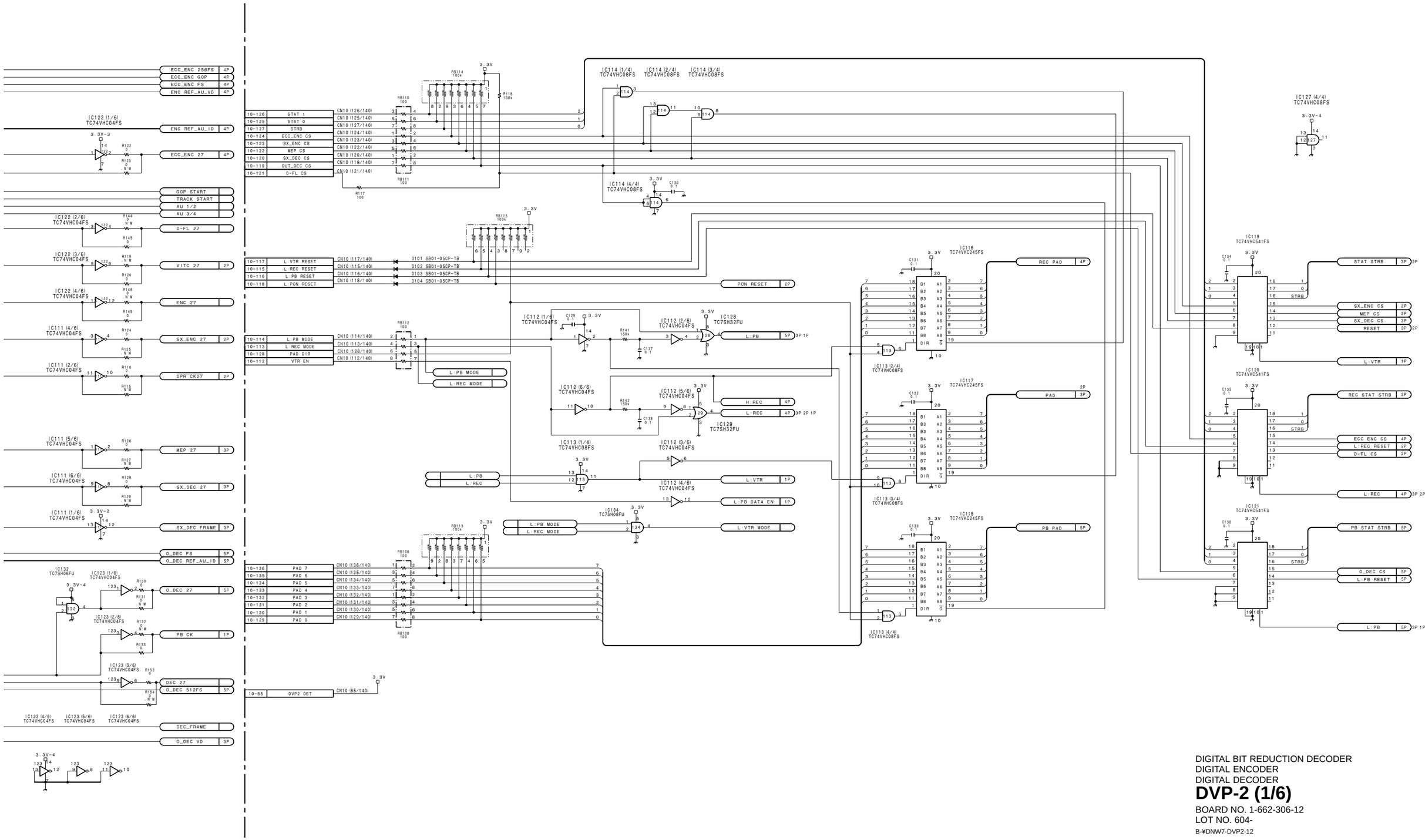

DIGITAL BIT REDUCTION DECODER
DIGITAL ENCODER
DIGITAL DECODER

DVP-2 (1/6)

BOARD NO. 1-662-306-12
LOT NO. 604-
B-¥DNW7-DVP2-12

DNV-5(SY):S/N 10001 and Higher
DNV-5(J):S/N 30001 and Higher
DNW-7/90/90WS(SY):S/N 10001 and Higher
DNW-7/90/90WS(J):S/N 30001 and Higher
DNW-7P/90P/90WSP(SY):S/N 40001 and Higher

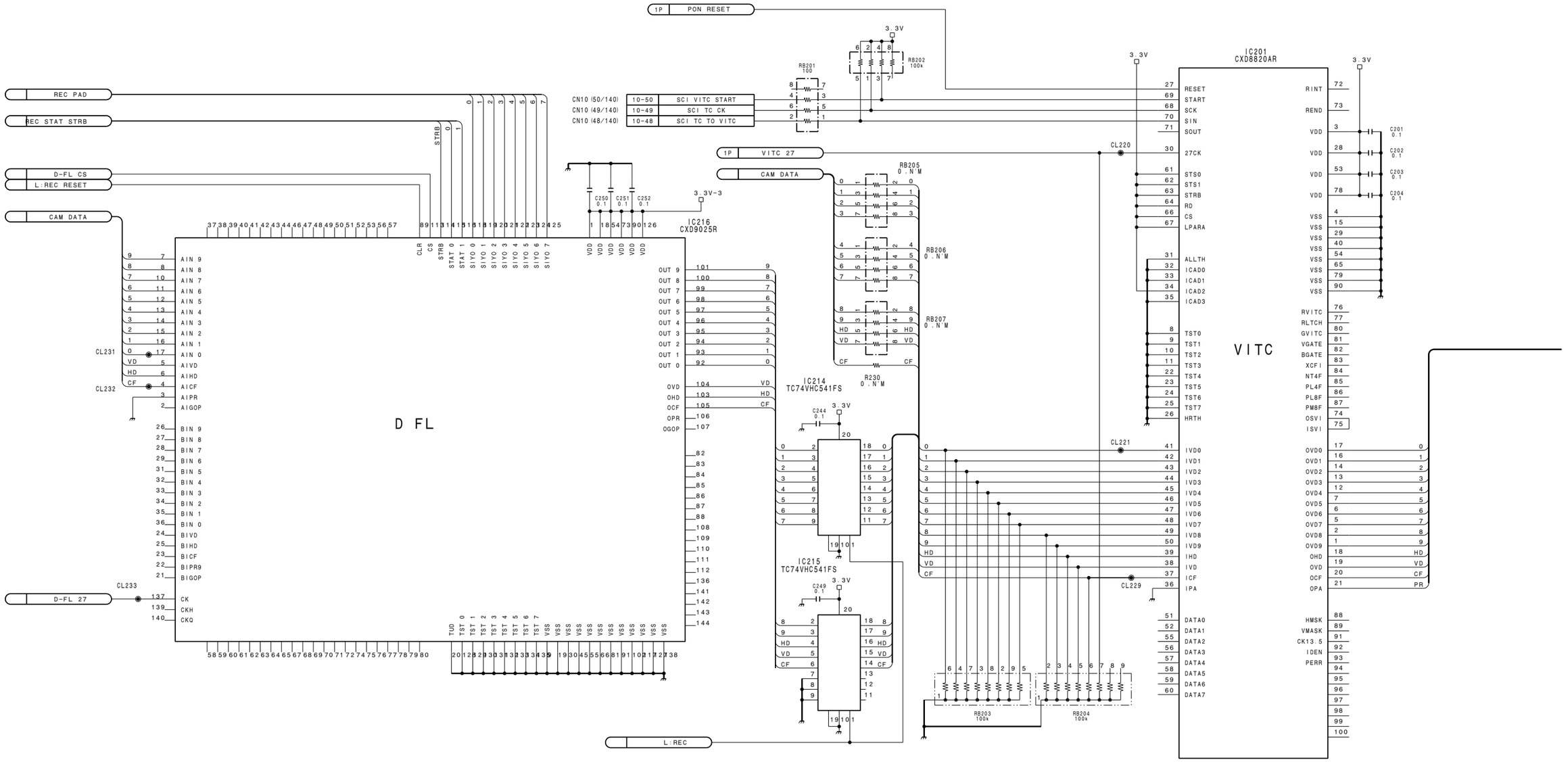

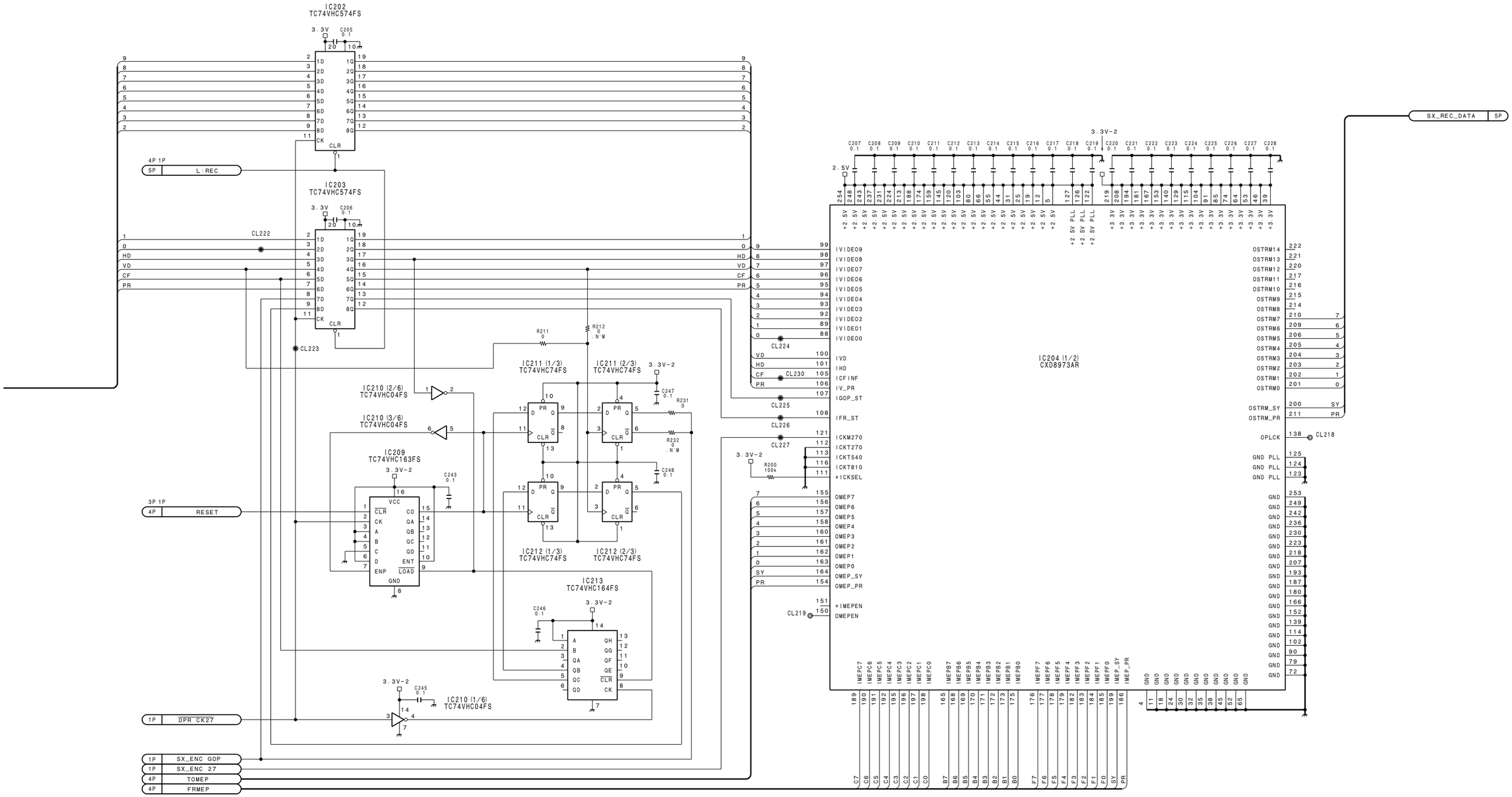

DIGITAL BIT REDUCTION DECODER
DIGITAL ENCODER
DIGITAL DECODER

DVP-2 (2/6)

BOARD NO. 1-662-306-12
LOT NO. 604-
B-¥DNW7-DVP2-12

DNV-5(SY):S/N 10001 and Higher
DNV-5(J):S/N 30001 and Higher
DNW-7/90/90WS(SY):S/N 10001 and Higher
DNW-7/90/90WS(J):S/N 30001 and Higher
DNW-7P/90P/90WSP(SY):S/N 40001 and Higher

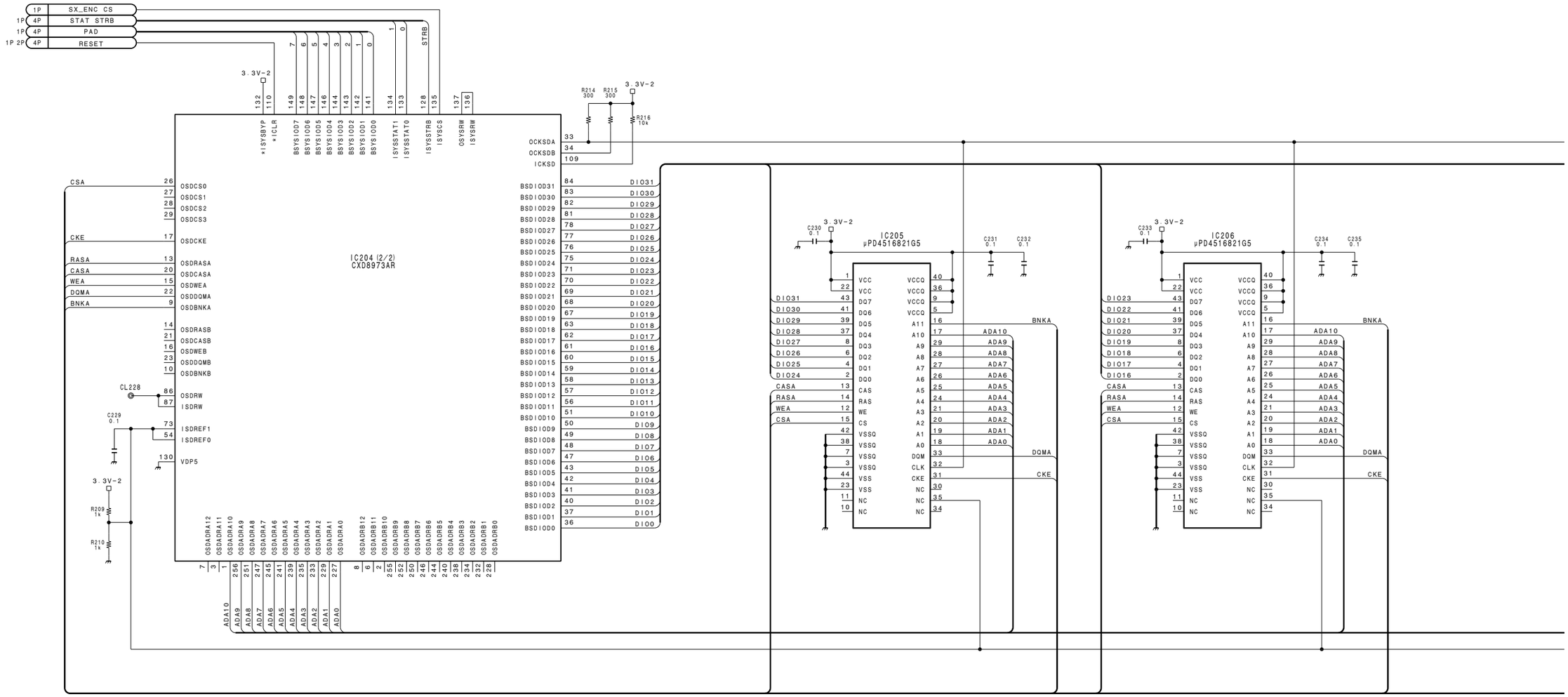

http://getMANUAL.com

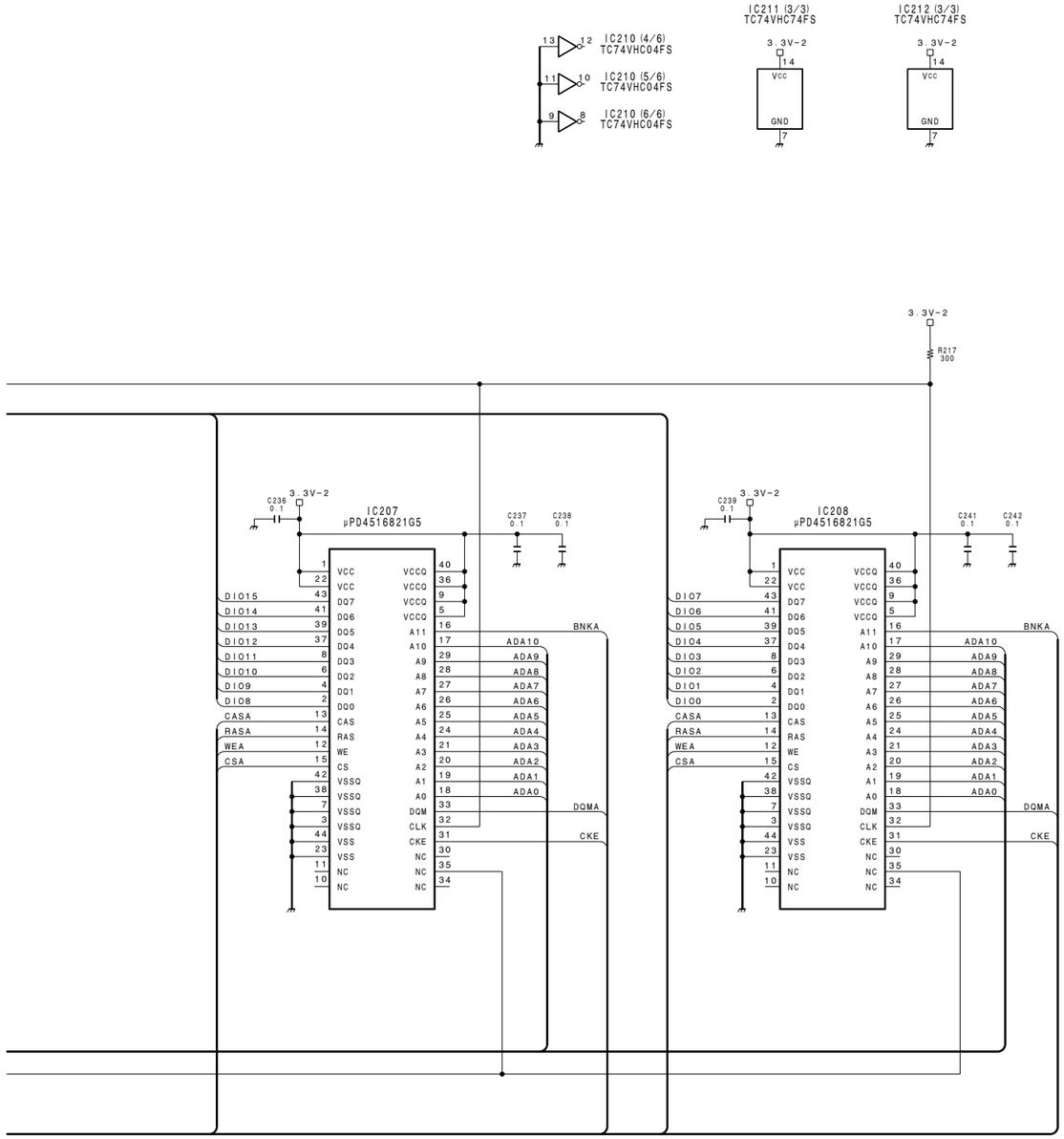

DIGITAL BIT REDUCTION DECODER
DIGITAL ENCODER
DIGITAL DECODER

DVP-2 (3/6)

BOARD NO. 1-662-306-12
LOT NO. 604-
B-¥DNW7-DVP2-12

DNV-5(SY):S/N 10001 and Higher
DNV-5(J):S/N 30001 and Higher
DNW-7/90/90WS(SY):S/N 10001 and Higher
DNW-7/90/90WS(J):S/N 30001 and Higher
DNW-7P/90P/90WSP(SY):S/N 40001 and Higher

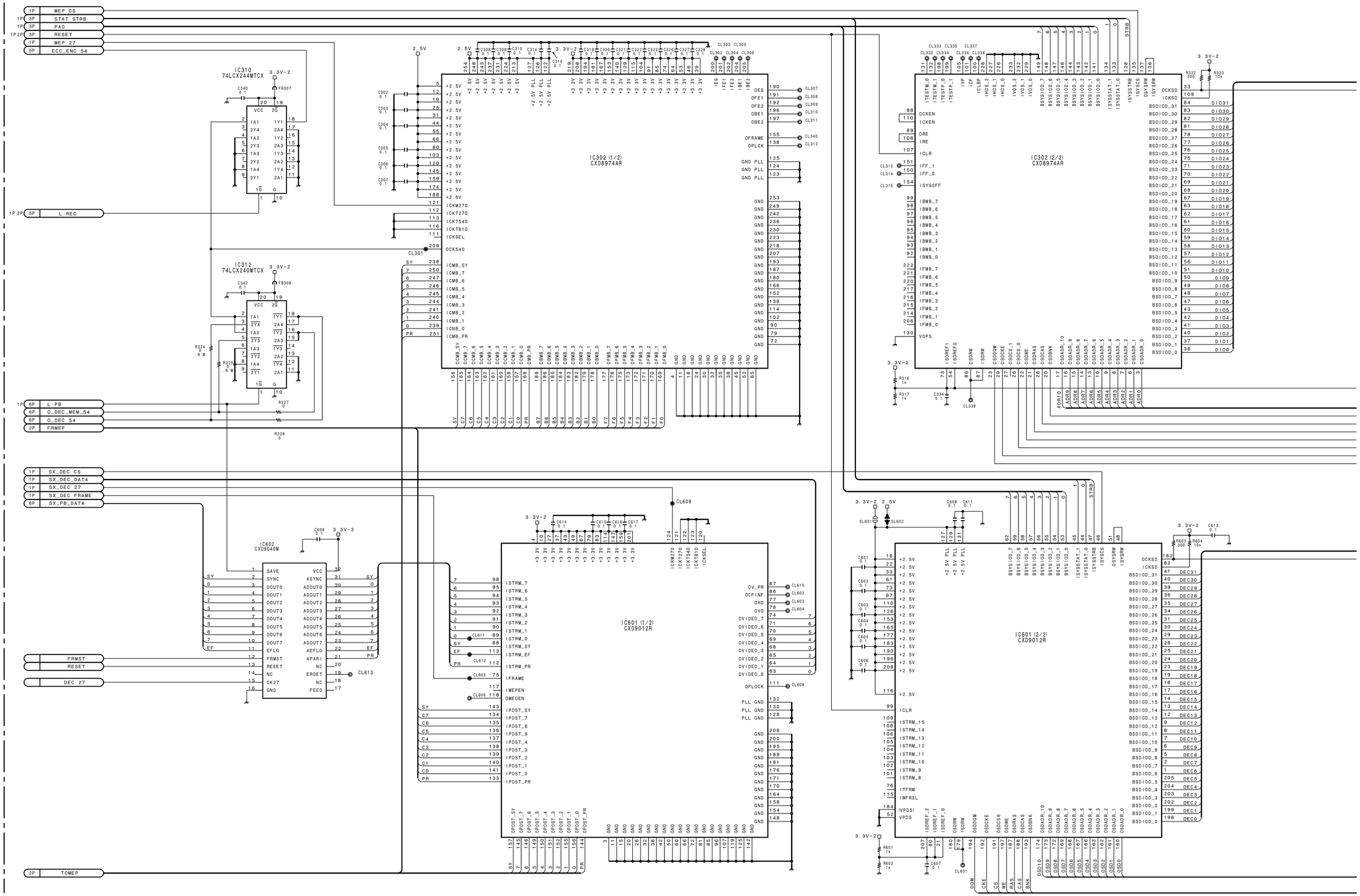

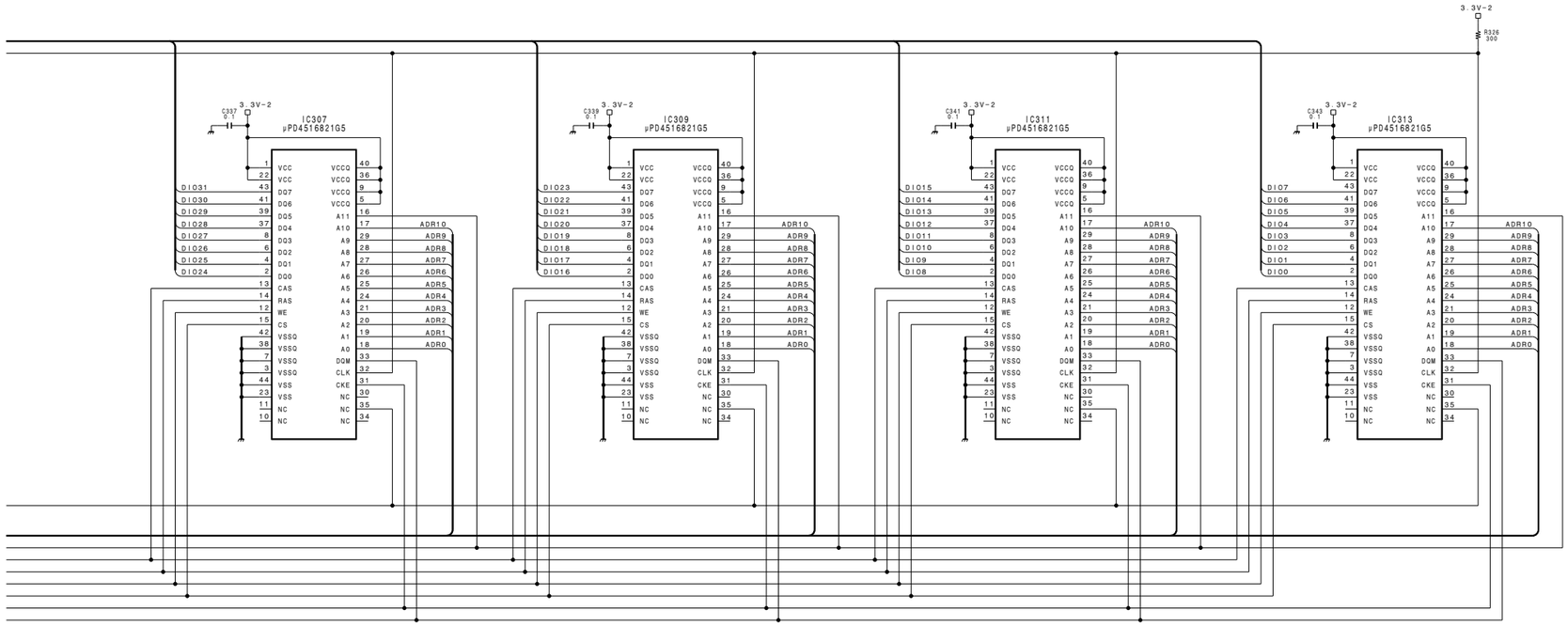

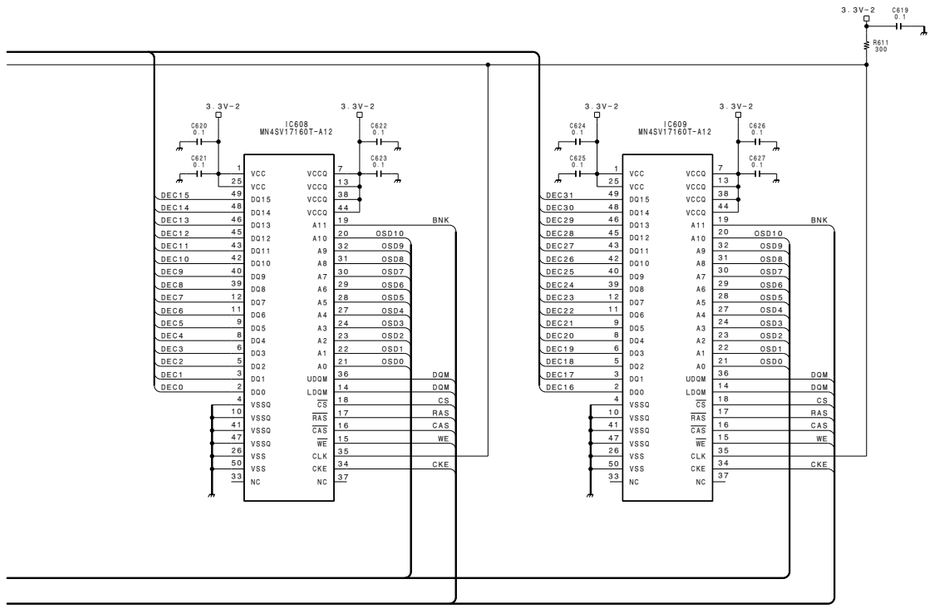

E301

DIGITAL BIT REDUCTION DECODER
DIGITAL ENCODER
DIGITAL DECODER

DVP-2 (4/6)

BOARD NO. 1-662-306-12
LOT NO. 604-
B-¥DNW7-DVP2-12

DNV-5(SY):S/N 10001 and Higher
DNV-5(J):S/N 30001 and Higher
DNW-7/90/90WS(SY):S/N 10001 and Higher
DNW-7/90/90WS(J):S/N 30001 and Higher
DNW-7P/90P/90WSP(SY):S/N 40001 and Higher

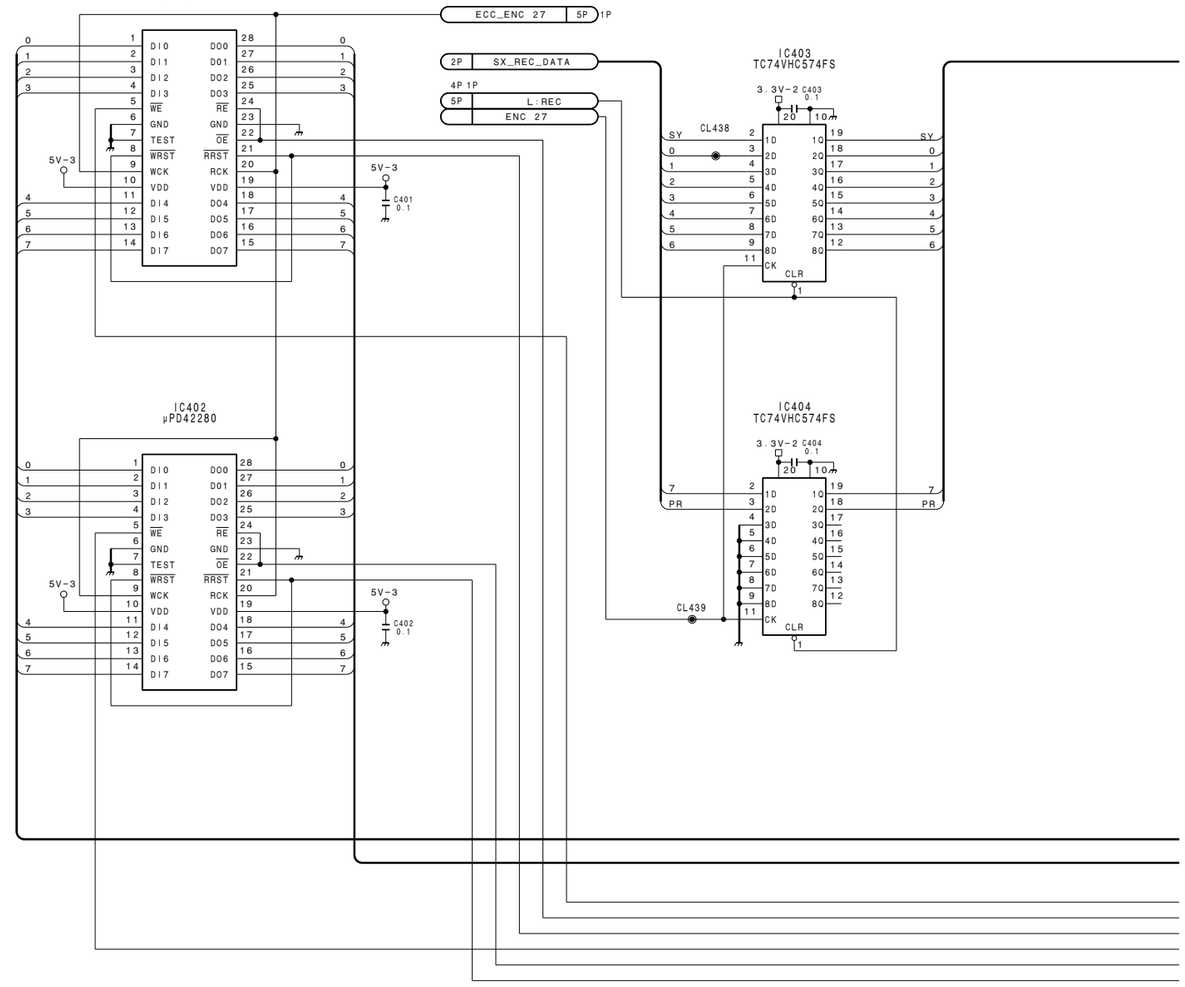

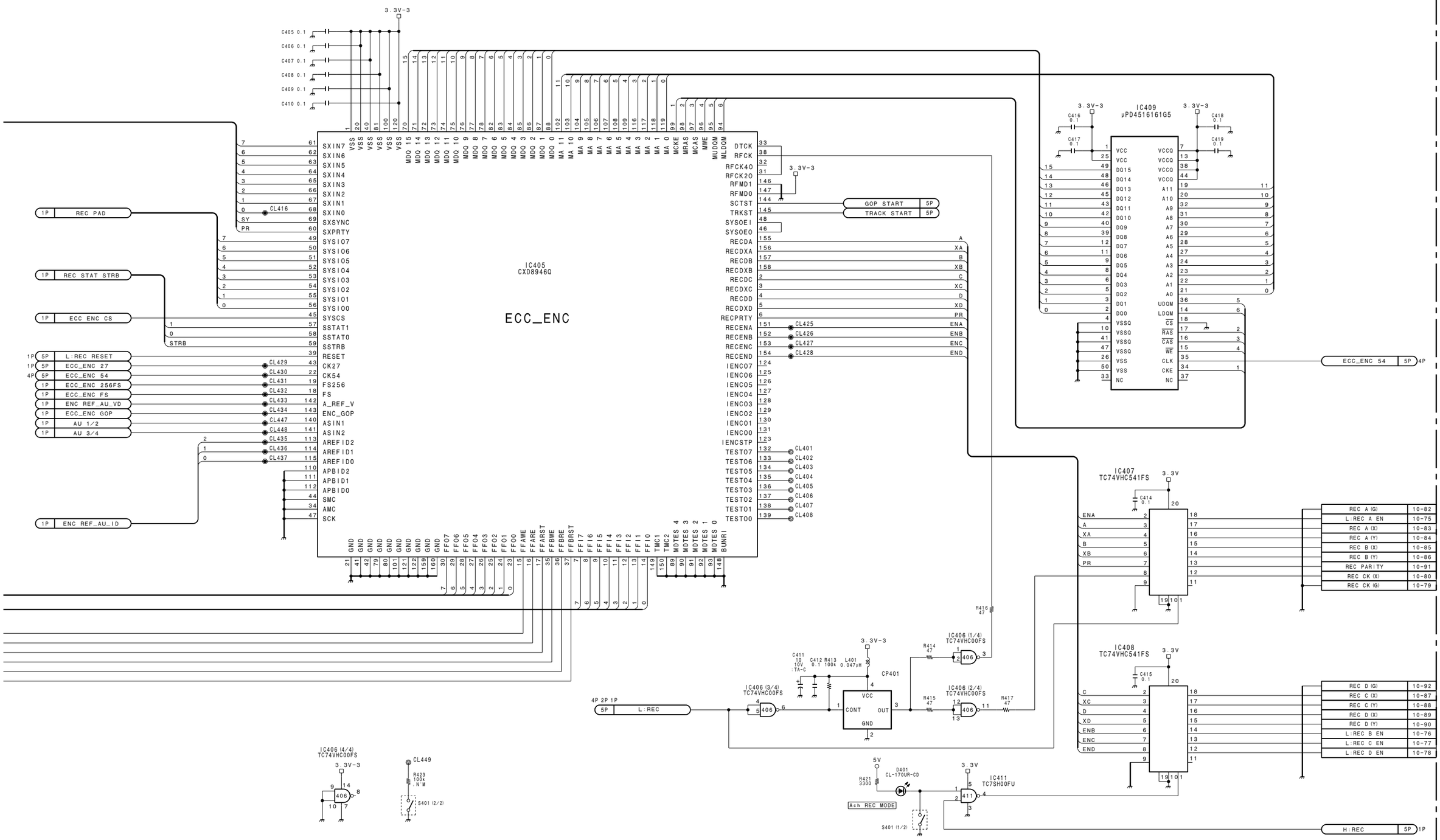

DIGITAL BIT REDUCTION DECODER
DIGITAL ENCODER
DIGITAL DECODER

DVP-2 (5/6)

BOARD NO. 1-662-306-12
LOT NO. 604-

B-¥DNW7-DVP2-12

DNV-5(SY):S/N 10001 and Higher
DNV-5(J):S/N 30001 and Higher
DNW-7/90/90WS(SY):S/N 10001 and Higher
DNW-7/90/90WS(J):S/N 30001 and Higher
DNW-7P/90P/90WSP(SY):S/N 40001 and Higher

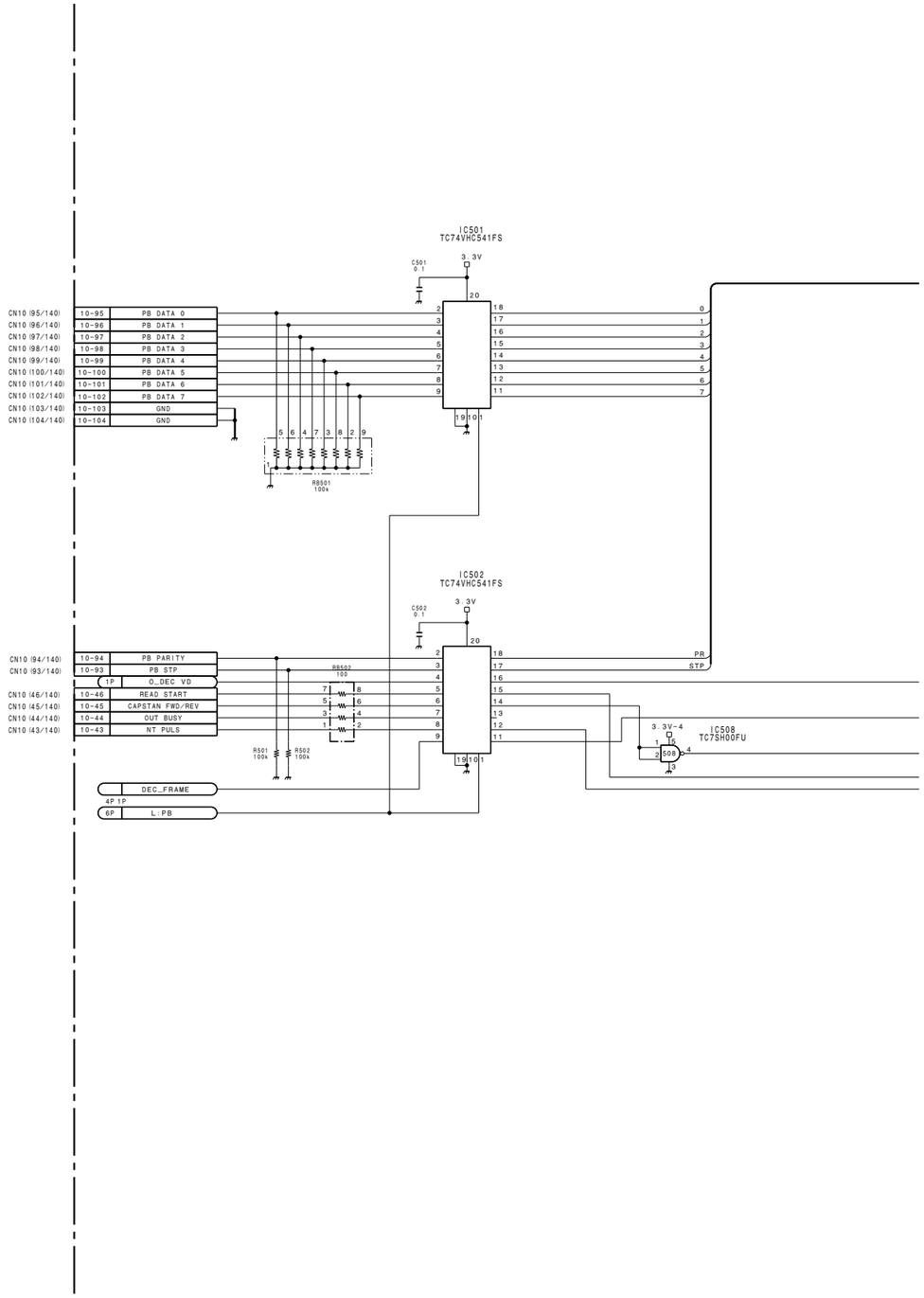

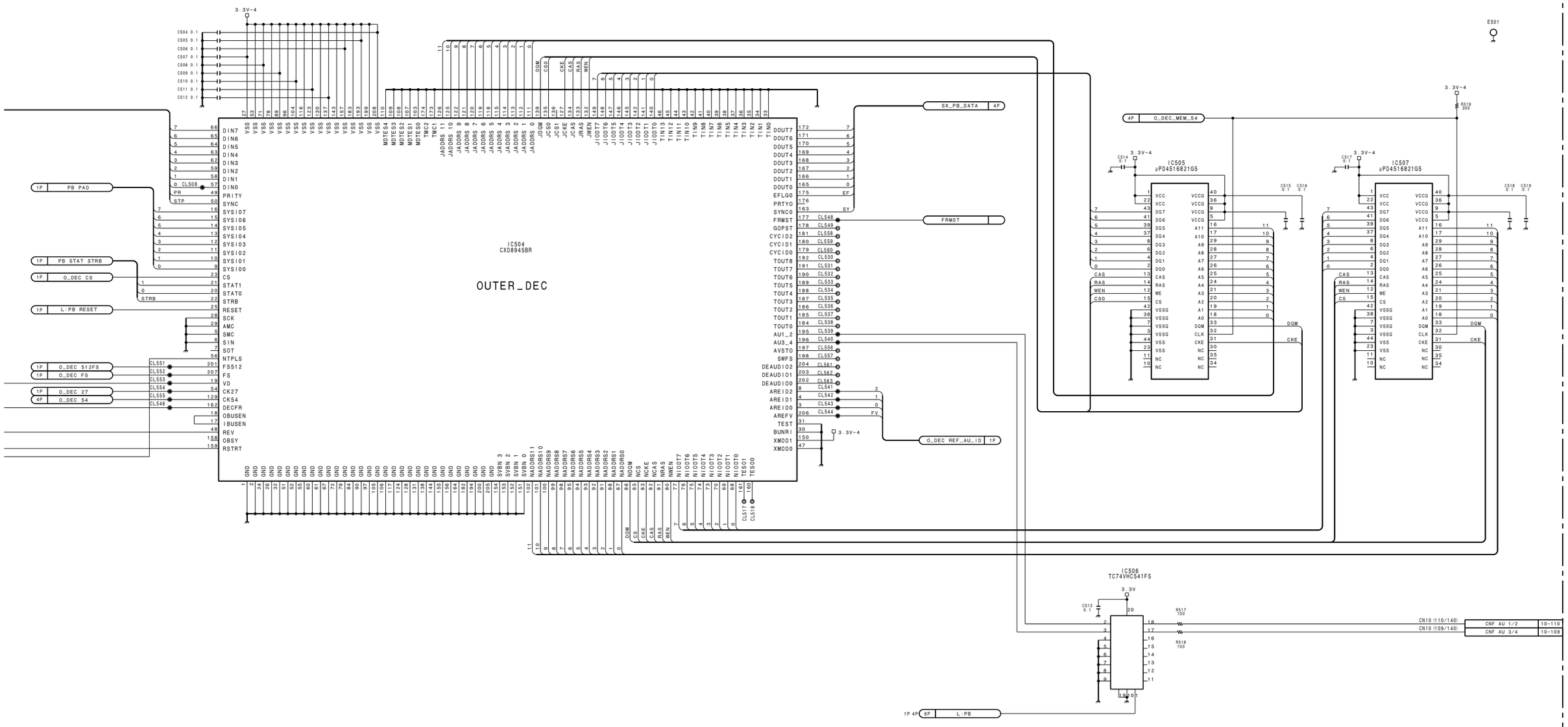

DIGITAL BIT REDUCTION DECODER
DIGITAL ENCODER
DIGITAL DECODER

DVP-2 (6/6)

BOARD NO. 1-662-306-12
LOT NO. 604-
B-¥DNW7-DVP2-12

DNW-7/90/90WS(SY):S/N 10001 and Higher
DNW-7/90/90WS(J):S/N 30001 and Higher
DNW-7P/90P/90WSP(SY):S/N 40001 and Higher

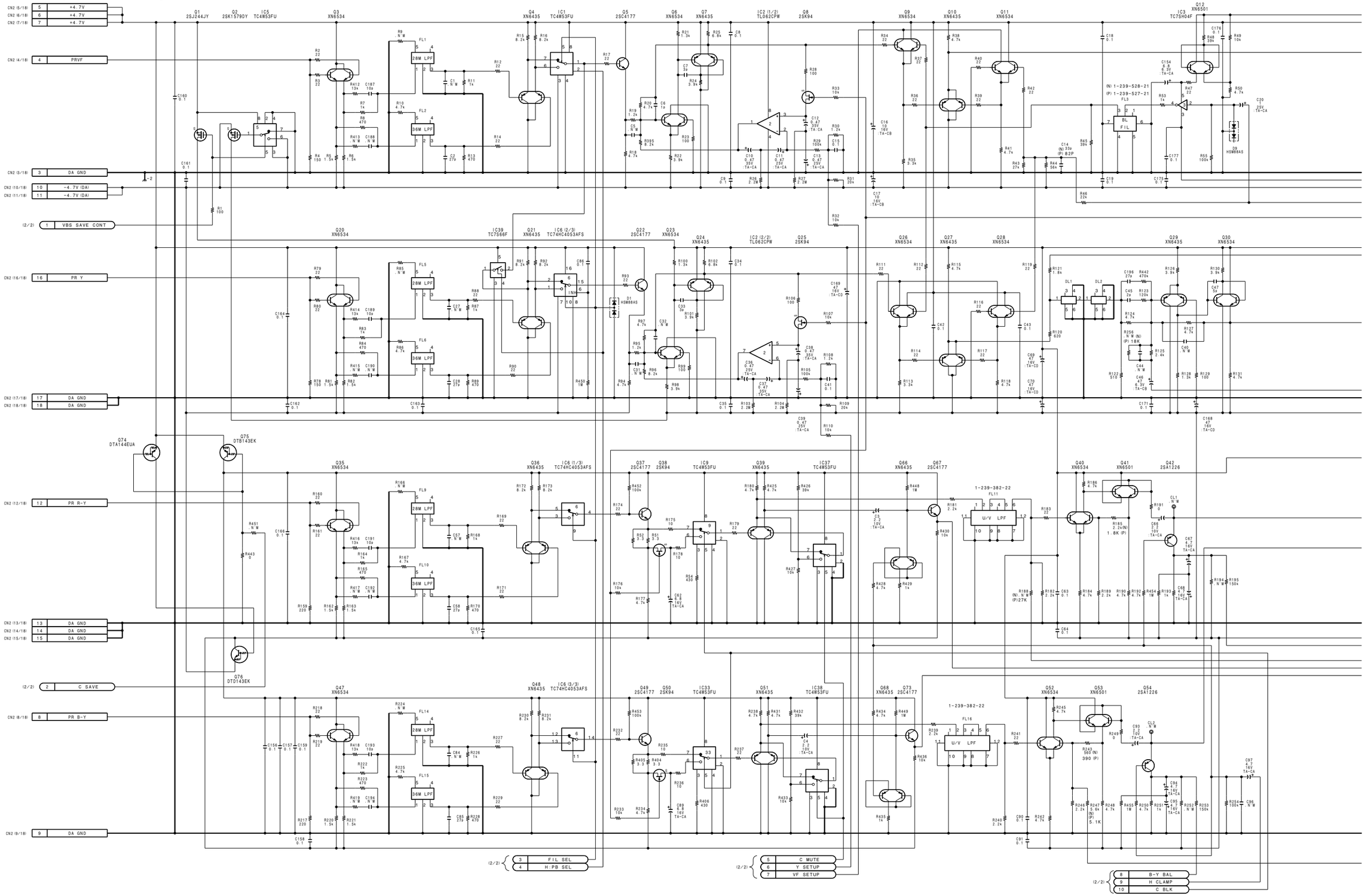

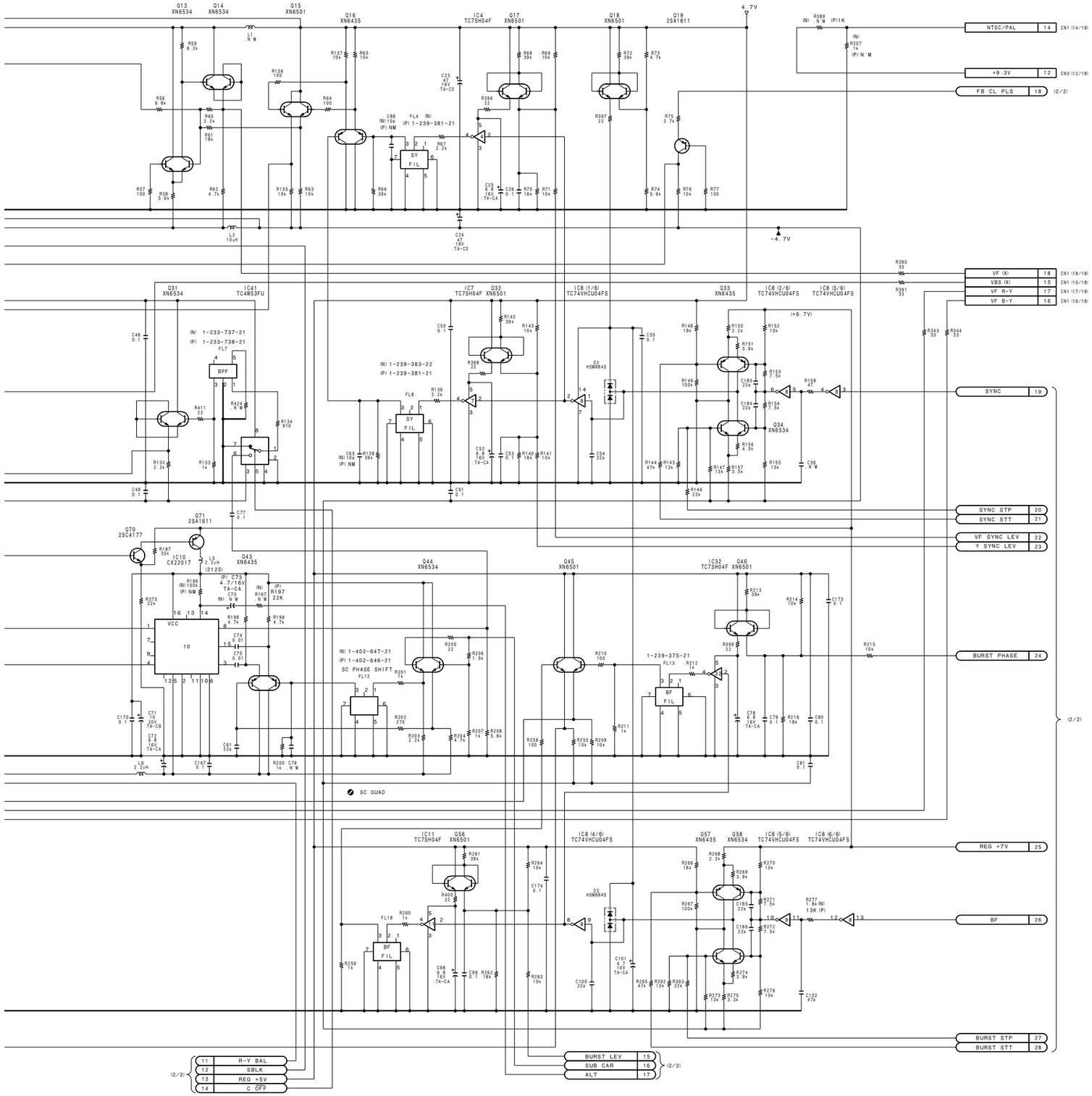

	NT		PAL	
C88	10P	1-162-915-91	N.M	
C65	10P	1-162-915-91	N.M	
C149	22P	1-162-919-91	18P	1-162-918-91
C14	33P	1-162-921-91	82P	1-162-926-91
C110	100P	1-162-927-91	56P	1-162-924-91
C60	N.M		47P	1-162-923-91
JR1	0	1-216-864-91	N.M	
JR4	0	1-216-864-91	N.M	
R347	0	1-216-864-91	N.M	
R377	0	1-216-864-91	N.M	
R303	47	1-218-660-91	N.M	
R333	47	1-218-660-91	N.M	
R350	47	1-218-660-91	N.M	
R302	100	1-218-668-91	N.M	
R185	2.2K	1-218-700-91	1.8K	1-218-698-91
R243	560	1-218-686-91	390	1-218-682-91
R247	3.9K	1-218-706-91	5.1K	1-218-709-91
R196	100K	1-218-740-91	N.M	
FL17		1-239-371-21		1-239-374-21
FL7		1-233-737-21		1-233-738-21
FL4		1-239-383-22		1-239-381-21
FL8		1-239-383-22		1-239-381-21
FL3		1-239-528-21		1-239-527-21
FL12		1-402-647-21		1-402-646-21
CP1	14.31818MHZ	1-579-716-11	17.734475MHZ	1-579-718-11
IC15	SN74HC163APW	8-759-050-10	N.M	
IC16	SN74HC163APW	8-759-050-10	N.M	
IC17	SN74HC163APW	8-759-050-10	N.M	
IC13	TLC29321PW	8-759-295-09	N.M	
C73	N.M		4.7/10V TA-CA	1-135-210-91
JR5	N.M		0	1-216-864-91
JR2	N.M		0	1-216-864-91
JR3	N.M		0	1-216-864-91
R348	N.M		0	1-216-864-91
R378	N.M		0	1-216-864-91
R244	N.M		47	1-218-660-91
R352	N.M		47	1-218-660-91
R349	N.M		47	1-218-660-91
R389	N.M		1K	1-218-692-91
R197	N.M		22K	1-218-724-91
R188	N.M		27K	1-218-726-91
R305	1K	1-218-692-91	5.6K	1-218-710-91
C116	N.M		47P	1-162-923-91
R438	47	1-218-660-91	6.2K	1-218-711-91
R439	0	1-216-864-91	N.M	
R277	47	1-218-660-91	13K	1-218-719-91
R256	N.M		18K	1-218-722-91
R257	1K	1-218-692-91	N.M	
R437	47	1-218-660-91	N.M	
R445	N.M		0	1-216-864-91
R446	0	1-216-864-91	N.M	
D13	1SS302	8-719-820-42	N.M	
R312	N.M		0	
R315	N.M		0	
R355	10K		6.8K	
R353	3.3K		3.6K	

COMPOSITE ENCODER
ES-11 (1/2)
BOARD NO. 1-662-309-11
LOT NO. 604-
B-¥DNW7-ES11-X1

DNW-7/90/90WS(SY):S/N 10001 and Higher
DNW-7/90/90WS(J):S/N 30001 and Higher
DNW-7P/90P/90WSP(SY):S/N 40001 and Higher

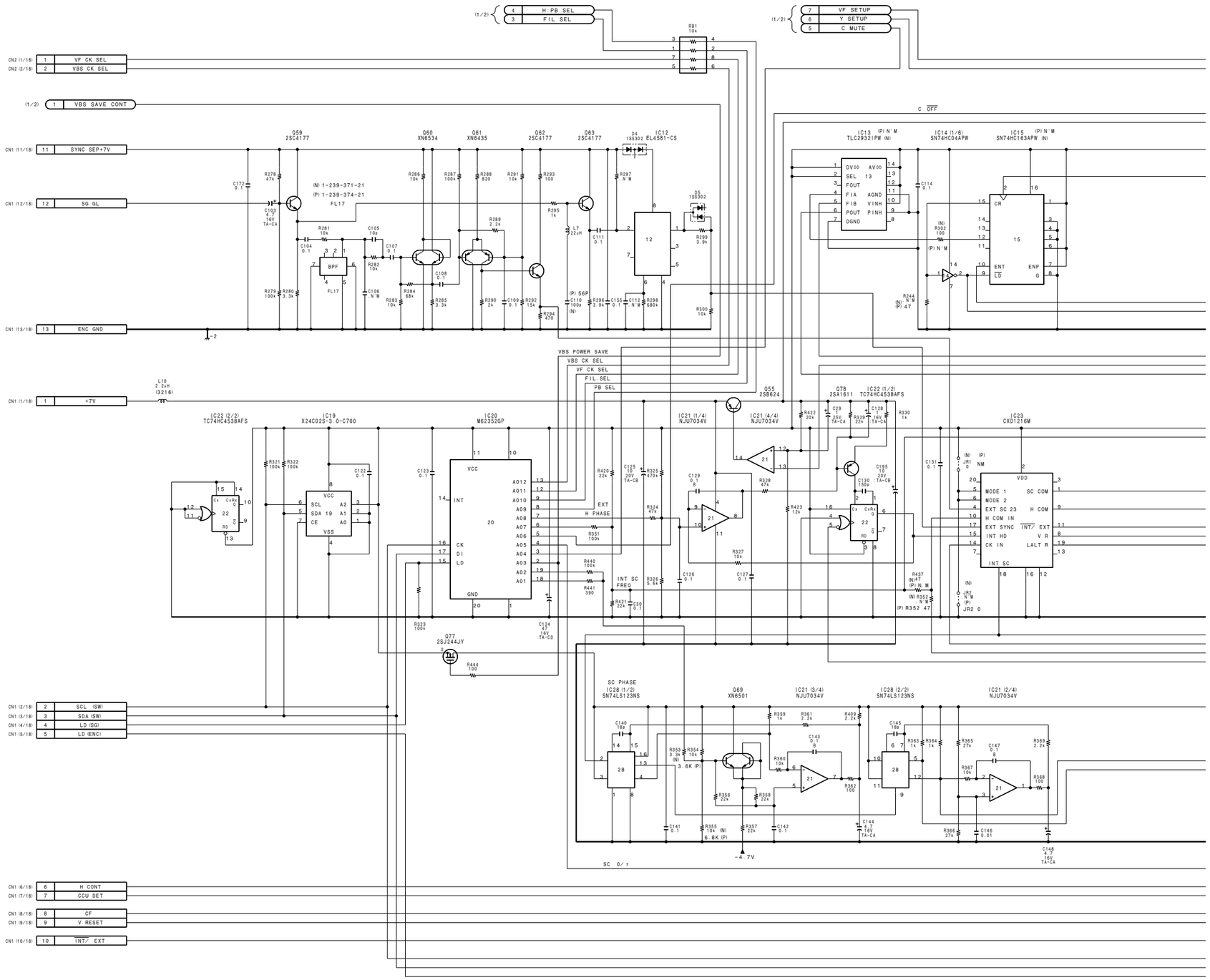

http://getMANUAL.com

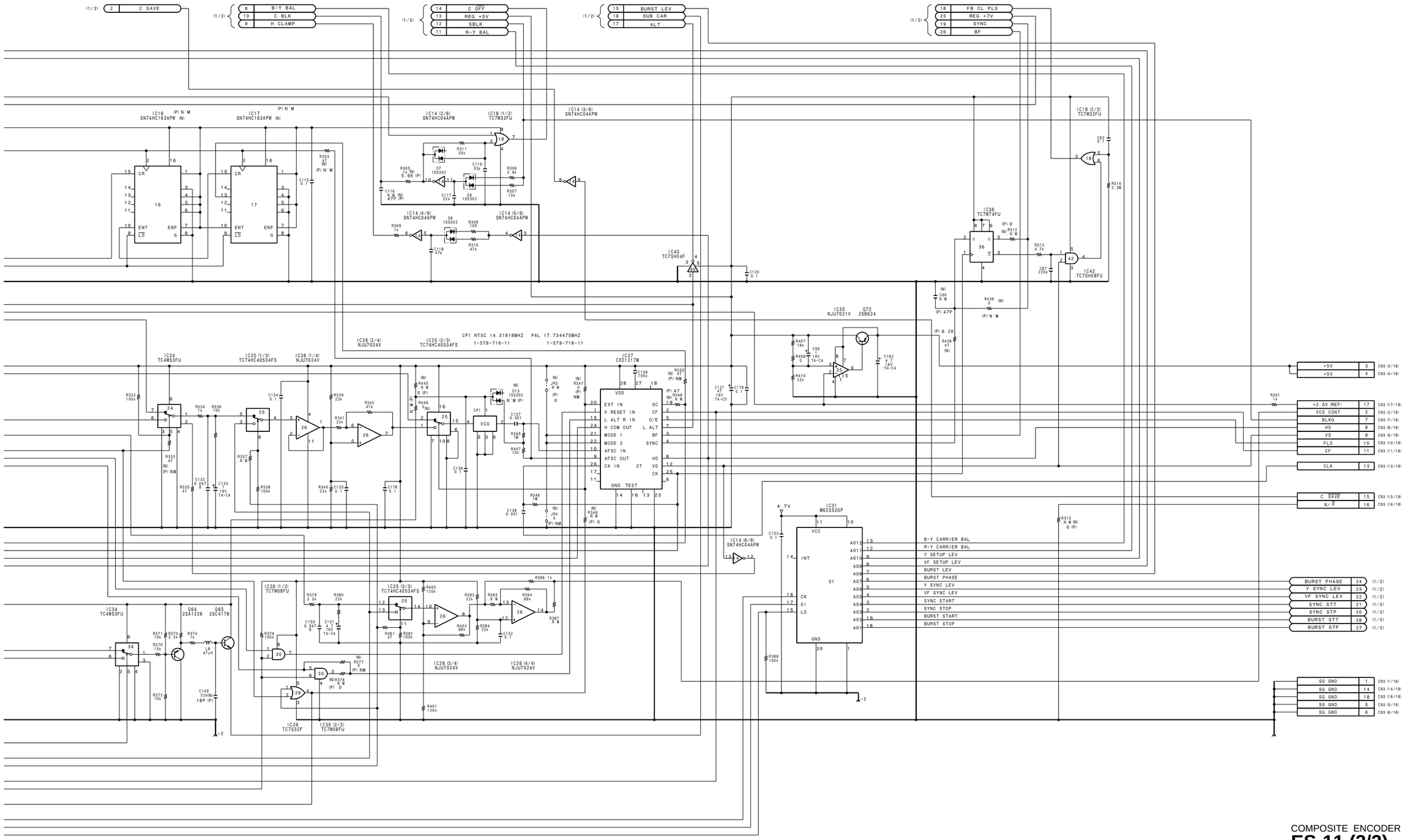

COMPOSITE ENCODER

ES-11 (2/2)

BOARD NO. 1-662-309-11
LOT NO. 604-

B-¥DNW7-ES11-X1

IF-634 (1/5) Camera/Video

DNV-5(SY):S/N 10001 and Higher
DNV-5(J):S/N 30001 and Higher

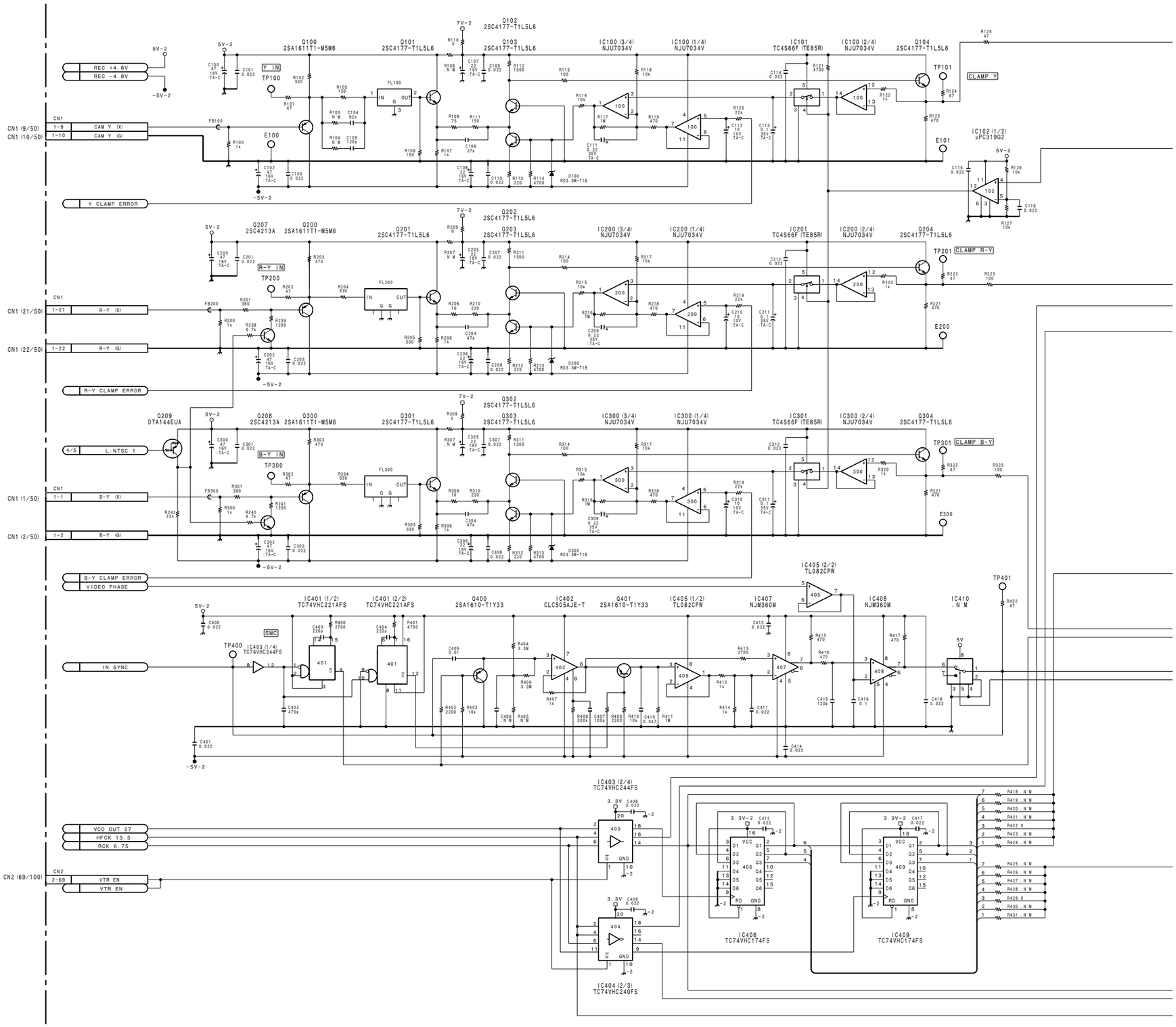

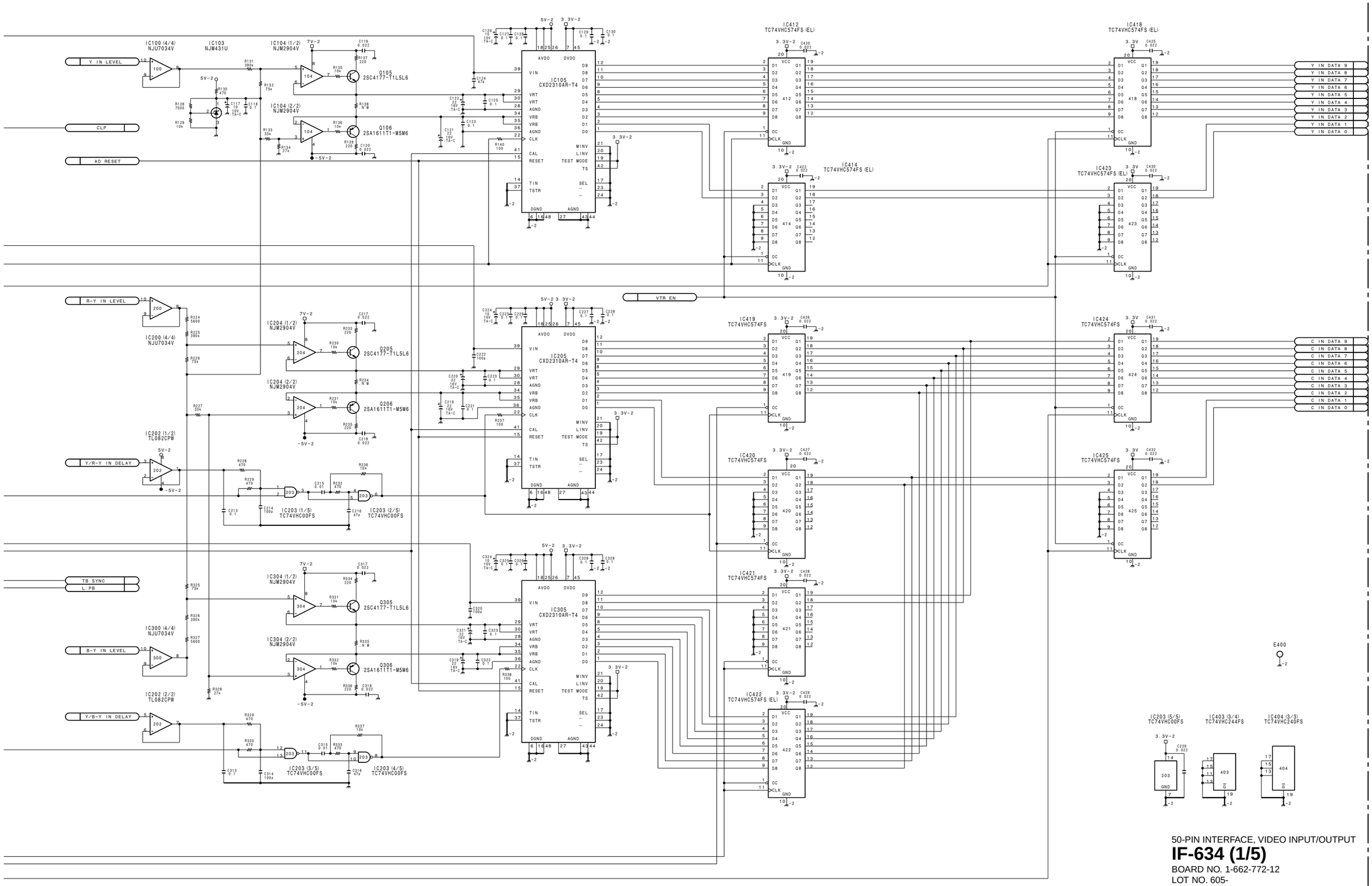

50-PIN INTERFACE, VIDEO INPUT/OUTPUT

IF-634 (1/5)

BOARD NO. 1-662-772-12
LOT NO. 605-
B-¥DNV5-IF634-12

DNV-5(SY):S/N 10001 and Higher
DNV-5(J):S/N 30001 and Higher

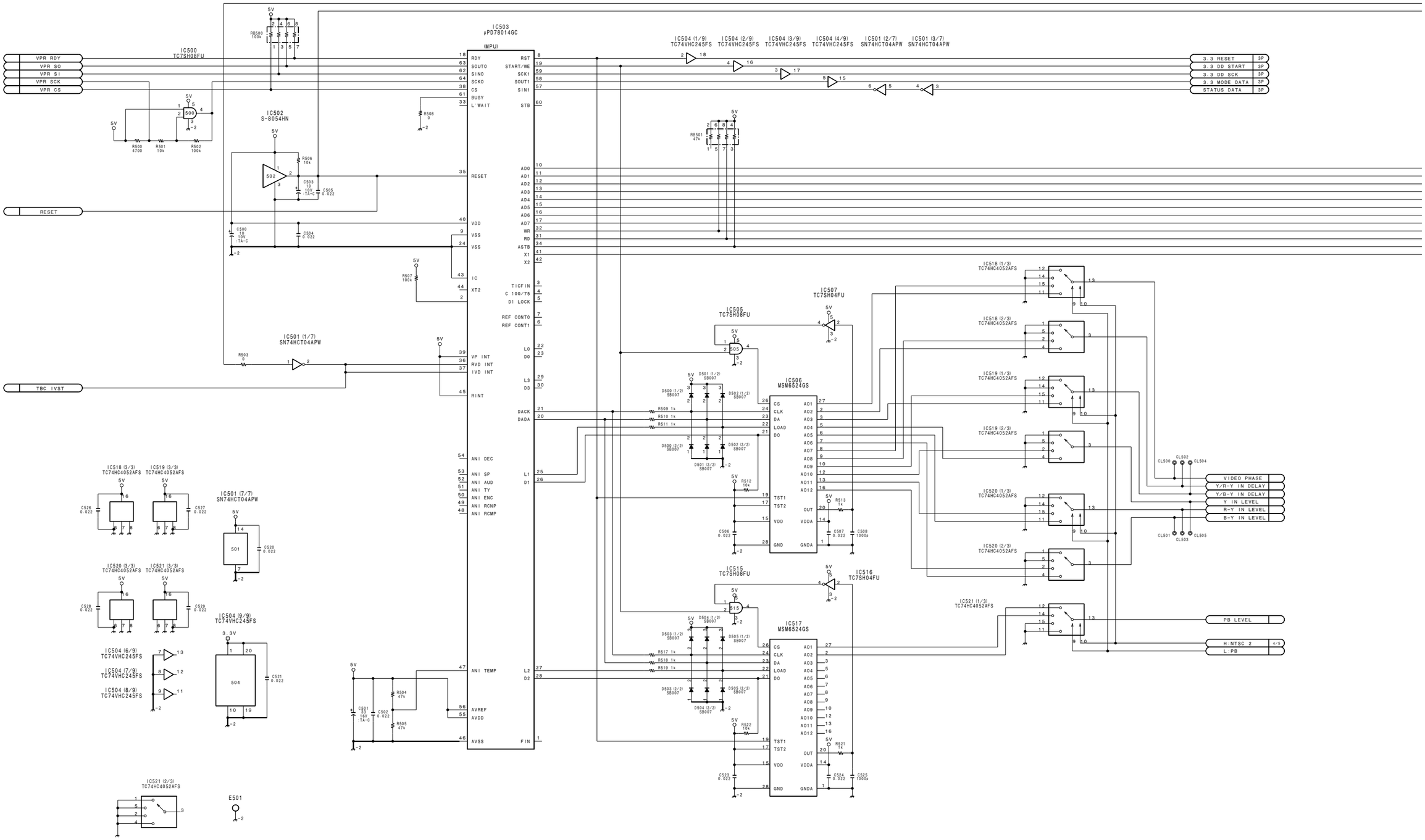

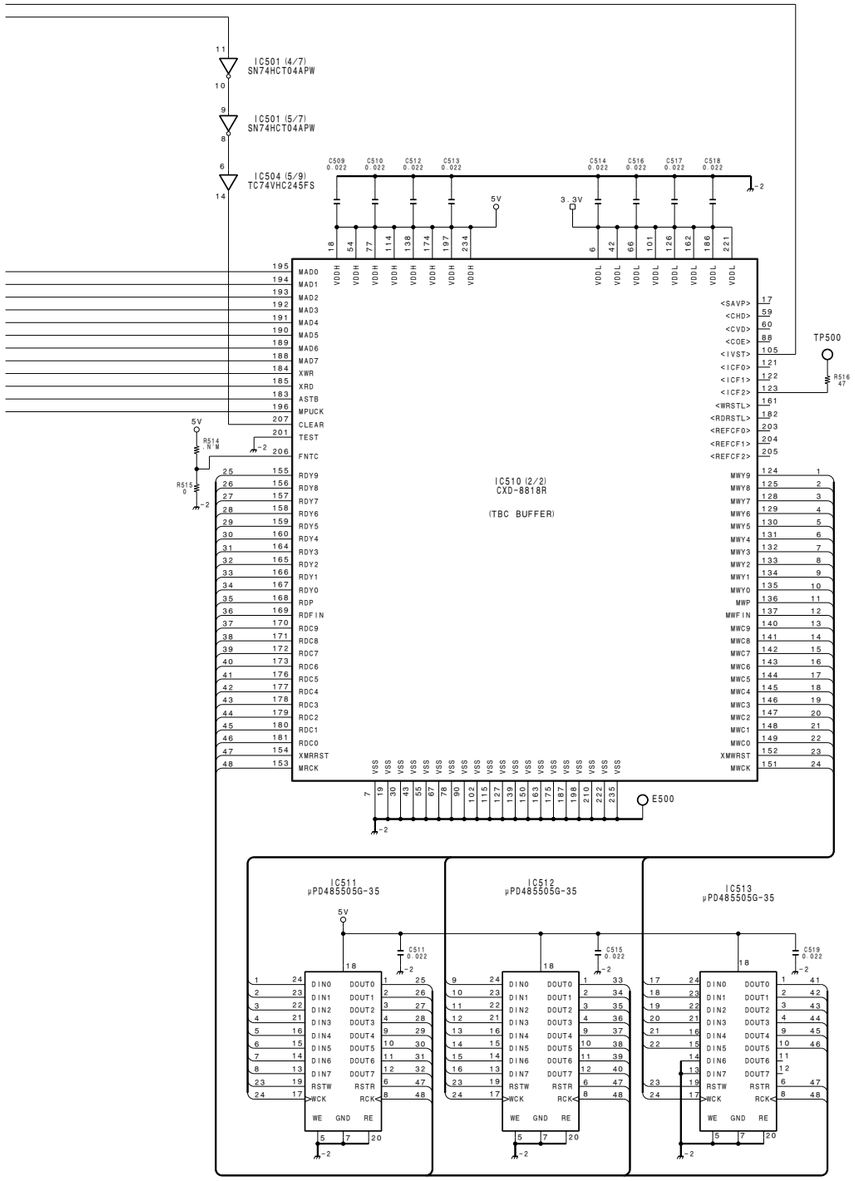

50-PIN INTERFACE, VIDEO INPUT/OUTPUT

IF-634 (2/5)

BOARD NO. 1-662-772-12
LOT NO. 605-

B-¥DNV5-IF634-12

DNV-5(SY):S/N 10001 and Higher
DNV-5(J):S/N 30001 and Higher

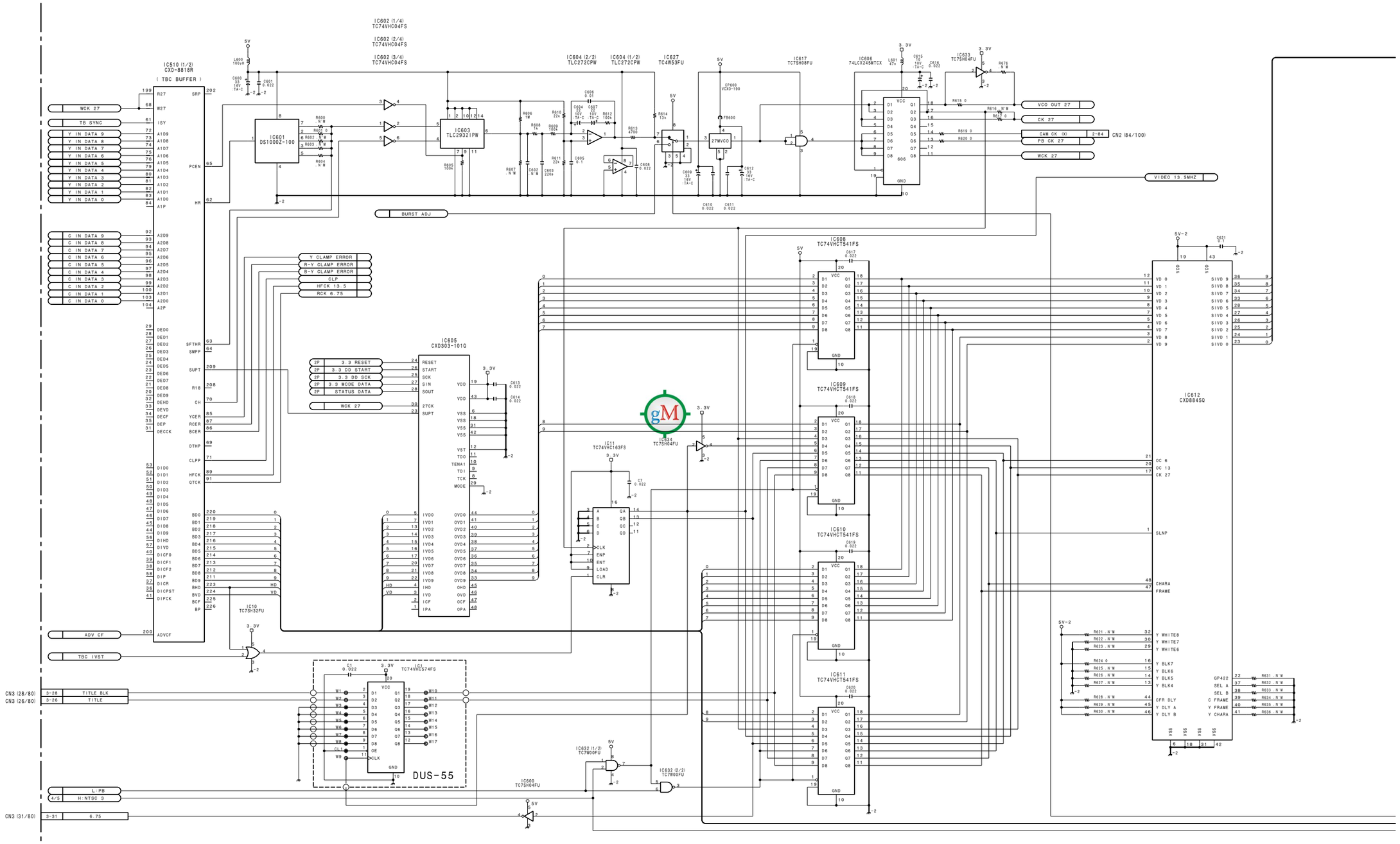

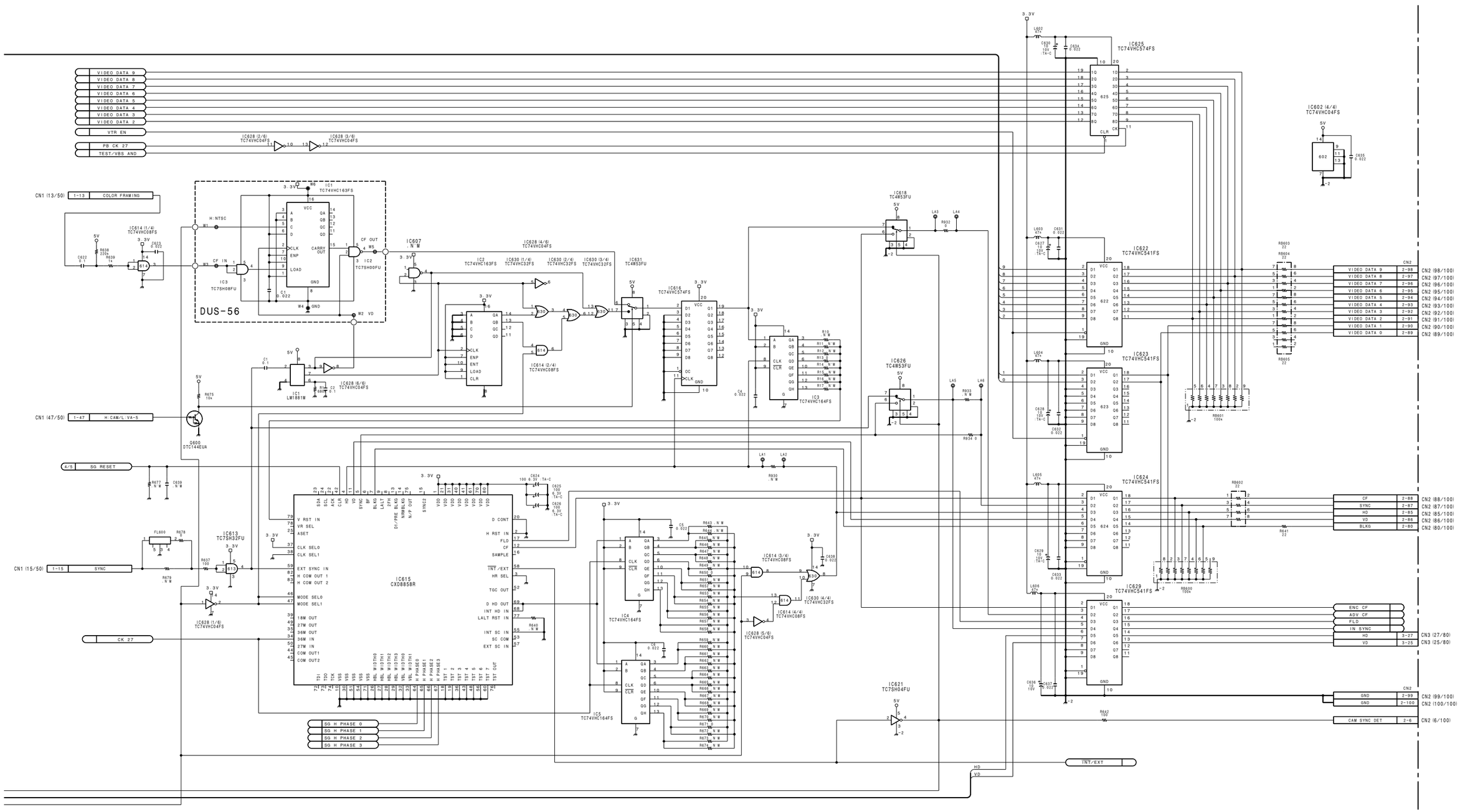

50-PIN INTERFACE, VIDEO INPUT/OUTPUT

IF-634 (3/5)

BOARD NO. 1-662-772-12
LOT NO. 605-
B-¥DNV5-IF634-12

DNV-5(SY):S/N 10001 and Higher
DNV-5(J):S/N 30001 and Higher

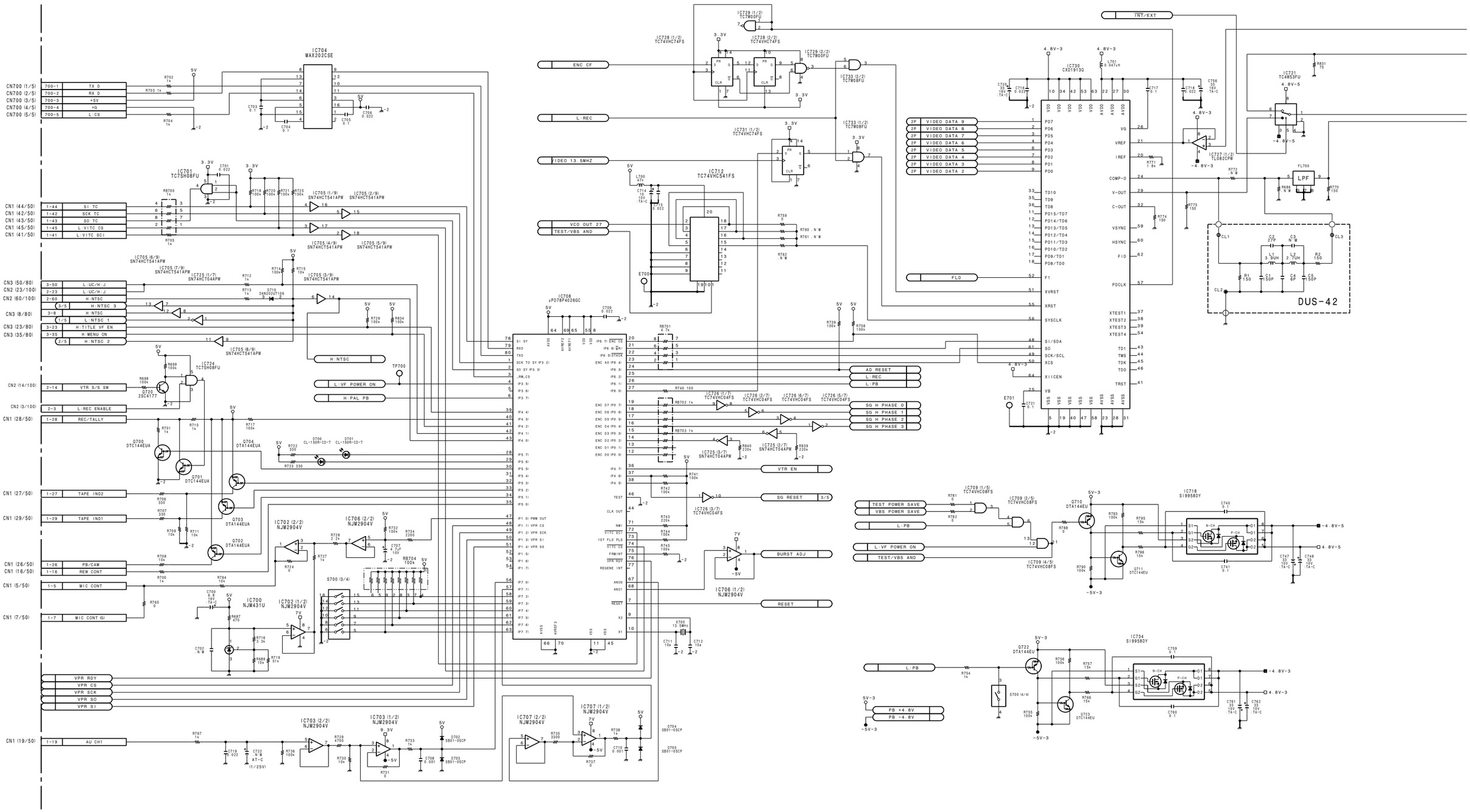

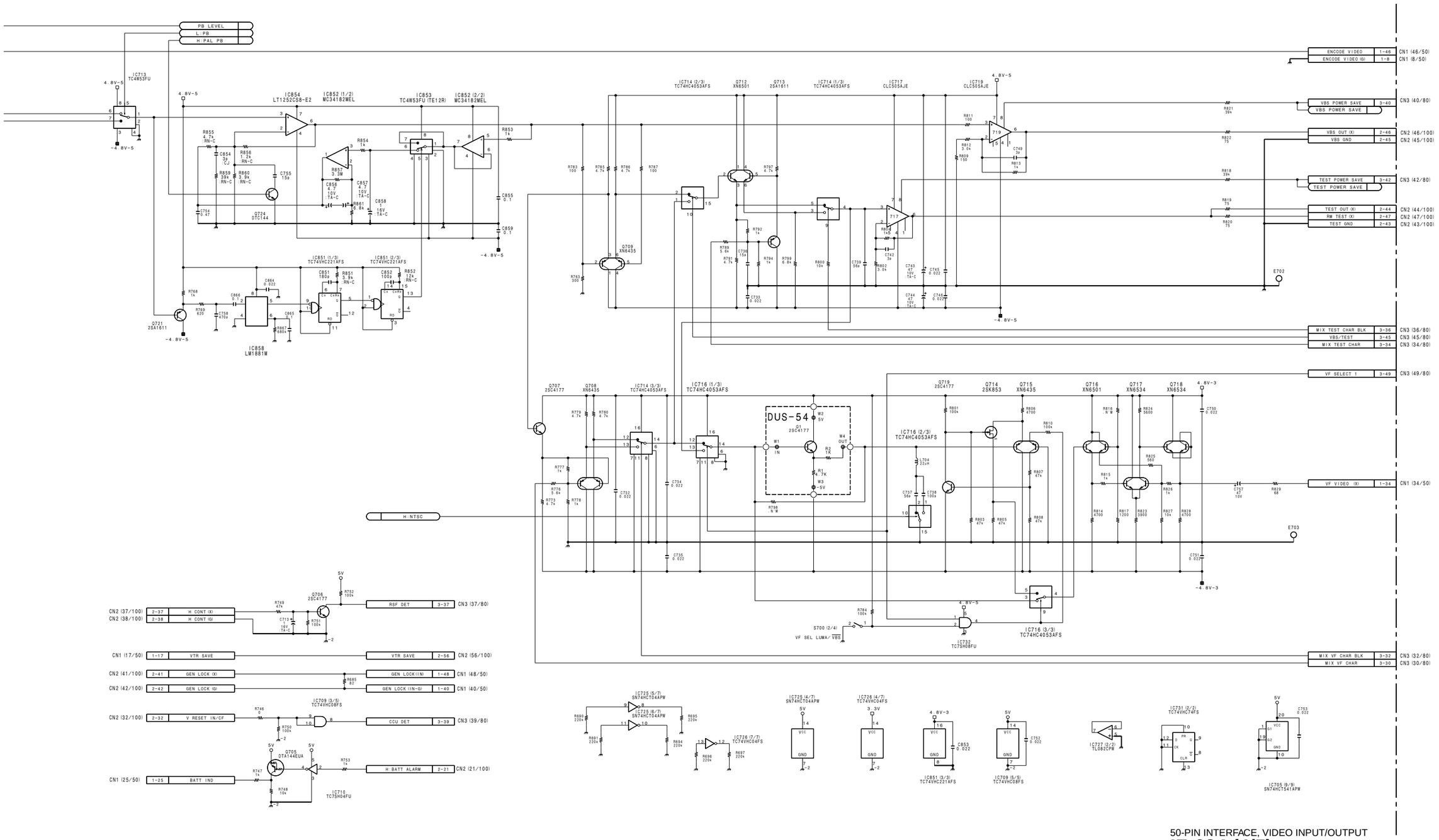

50-PIN INTERFACE, VIDEO INPUT/OUTPUT

IF-634 (4/5)

BOARD NO. 1-662-772-12
LOT NO. 605-

B-¥DNV5-IF634-12

DNV-5(SY):S/N 10001 and Higher
DNV-5(J):S/N 30001 and Higher

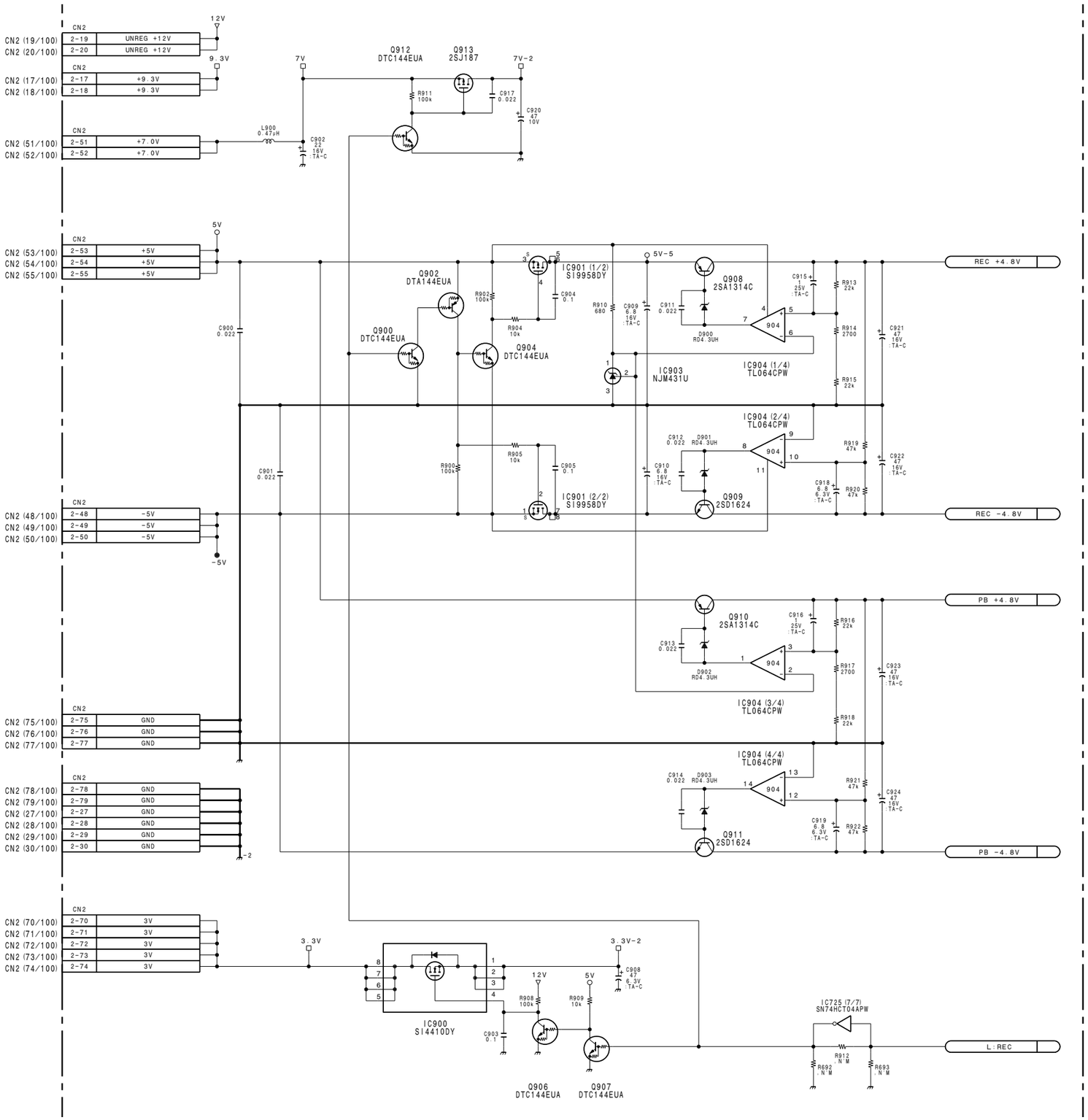

CN2			CN3	
CN2 (4/100)	2-4	SCK AT-SY	3-13	CN3 (13/80)
CN2 (11/100)	2-11	ROTALY PUSH IN	3-10	CN3 (10/80)
CN2 (12/100)	2-12	ROTALY A SW	3-12	CN3 (12/80)
CN2 (13/100)	2-13	ROTALY B SW	3-14	CN3 (14/80)
CN2 (22/100)	2-22	CA ENABLE	3-53	CN3 (53/80)
CN2 (25/100)	2-25	EXT TALLY	3-48	CN3 (48/80)
CN2 (26/100)	2-26	BACK TALLY	3-54	CN3 (54/80)
CN2 (31/100)	2-31	BATT REM	3-21	CN3 (21/80)
CN2 (33/100)	2-33	CHAR (VTR)	3-22	CN3 (22/80)
CN2 (34/100)	2-34	CHAR BLK (VTR)	3-24	CN3 (24/80)
CN2 (35/100)	2-35	TEST DET	3-41	CN3 (41/80)
CN2 (36/100)	2-36	VBS DET	3-43	CN3 (43/80)
CN2 (57/100)	2-57	SD IN (SY)	3-9	CN3 (9/80)
CN2 (58/100)	2-58	SD OUT (SY)	3-11	CN3 (11/80)
CN2 (61/100)	2-61	SCL (MC)	3-59	CN3 (59/80)
CN2 (62/100)	2-62	SDA (MC) I/O	3-61	CN3 (61/80)
CN2 (64/100)	2-64	SD OUT (RM)	3-17	CN3 (17/80)
CN2 (65/100)	2-65	SD IN (RM)	3-15	CN3 (15/80)
CN2 (66/100)	2-66	CA DATA	3-18	CN3 (18/80)
CN2 (81/100)	2-81	EXT EN	3-58	CN3 (58/80)
CN2 (82/100)	2-82	VIDIO DIR	3-60	CN3 (60/80)
CN2 (83/100)	2-83	SYNC DIR	3-62	CN3 (62/80)

CN3		
+3V	3-67	CN3 (67/80)
+3V	3-68	CN3 (68/80)
-5V	3-69	CN3 (69/80)
-5V	3-70	CN3 (70/80)
+5V	3-71	CN3 (71/80)
+5V	3-72	CN3 (72/80)
+5V	3-73	CN3 (73/80)
+5V	3-74	CN3 (74/80)
+7V	3-75	CN3 (75/80)
+7V	3-76	CN3 (76/80)
GND	3-1	CN3 (1/80)
GND	3-2	CN3 (2/80)
GND	3-3	CN3 (3/80)
GND	3-4	CN3 (4/80)
GND	3-77	CN3 (77/80)
GND	3-78	CN3 (78/80)
GND	3-79	CN3 (79/80)
GND	3-80	CN3 (80/80)

50-PIN INTERFACE, VIDEO INPUT/OUTPUT
IF-634 (5/5)
BOARD NO. 1-662-772-12
LOT NO. 605-
B-¥DNV5-IF634-12

http://getMANUAL.com

DNV-5(SY):S/N 10001 and Higher
DNV-5(J):S/N 30001 and Higher

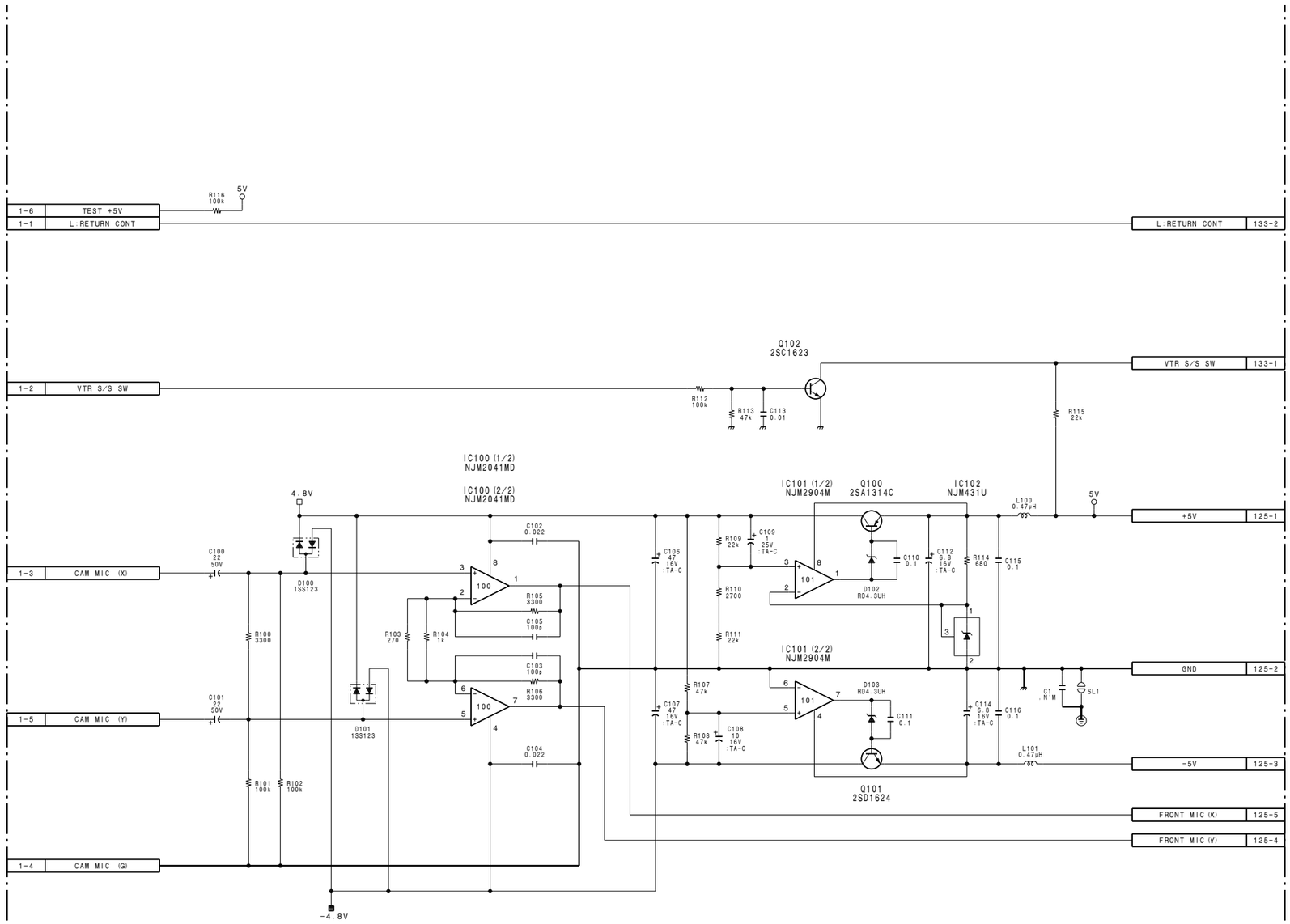

AUDIO PRE-AMP FOR 50-PIN

PA-203

BOARD NO.1-662-477-12
LOT NO. 605-

B-¥DNV5-PA203-12

1

2

3

4

5

A B C D E F G H

1

2

3

4

5

This page will be available as a supplement.

I J K L M N O P

DNV-5(SY):S/N 10001 and Higher
DNV-5(J):S/N 30001 and Higher

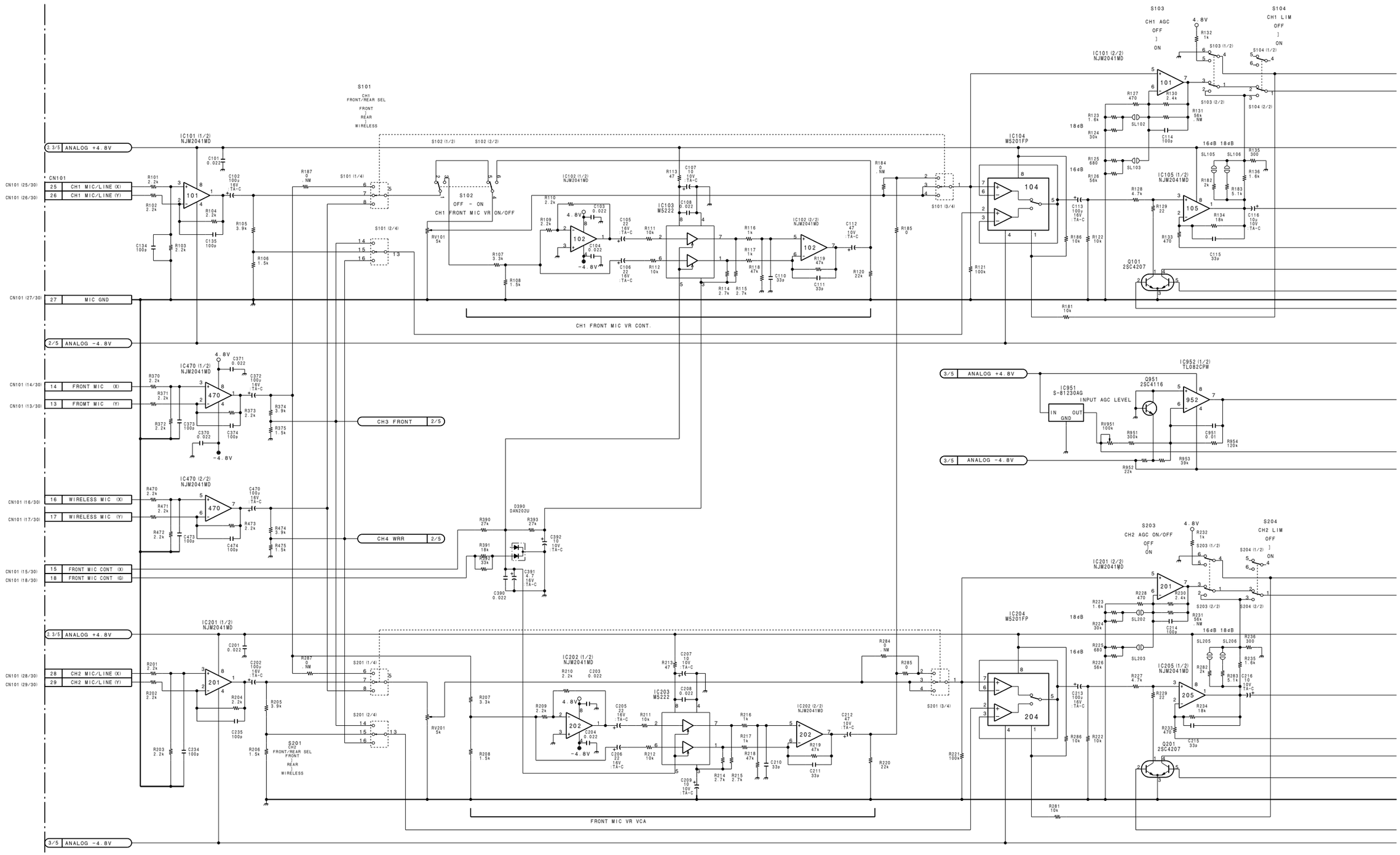

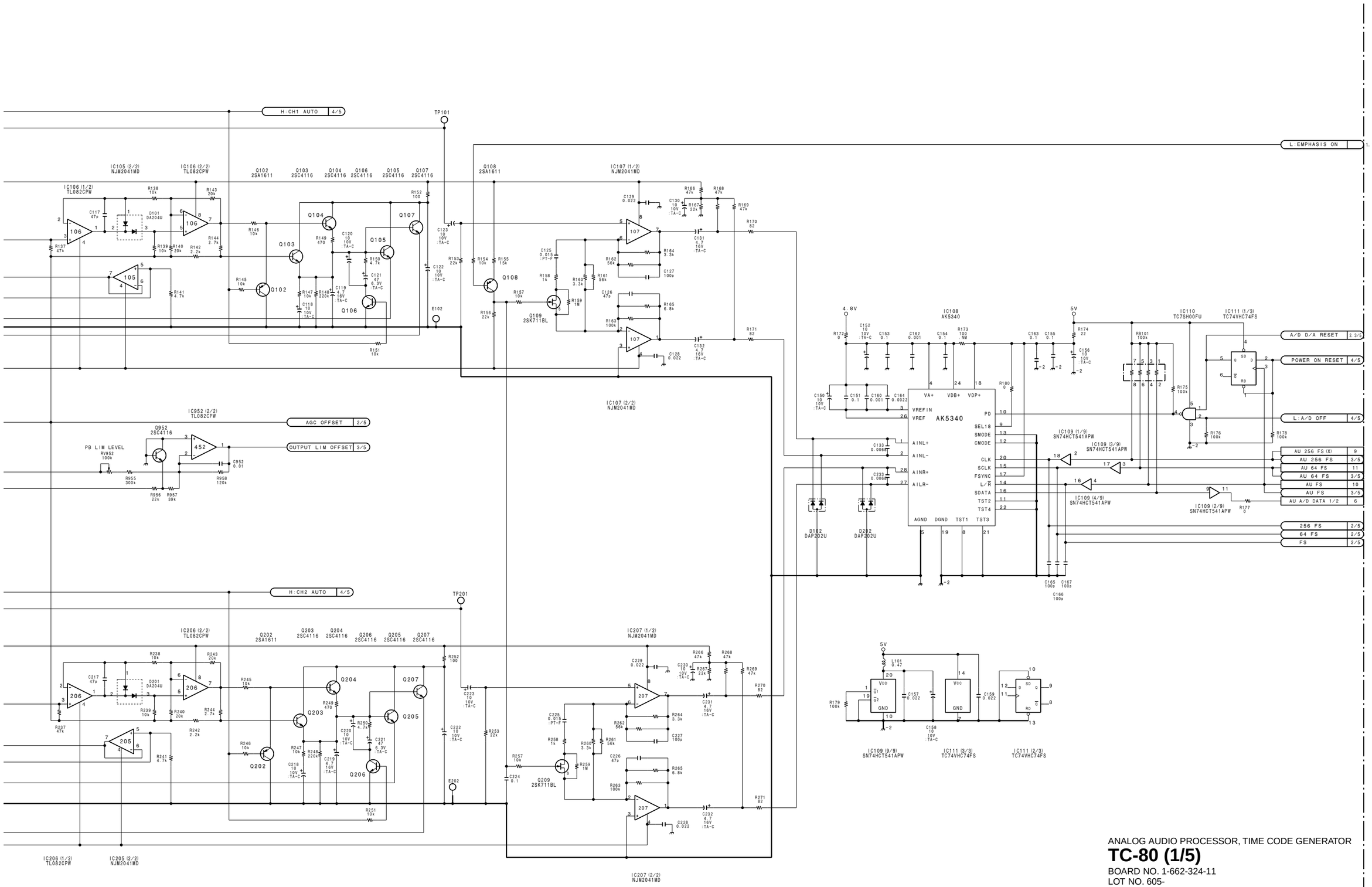

ANALOG AUDIO PROCESSOR, TIME CODE GENERATOR

TC-80 (1/5)

BOARD NO. 1-662-324-11
LOT NO. 605-
B-¥DNV5-TC80-X1

DNV-5(SY):S/N 10001 and Higher
DNV-5(J):S/N 30001 and Higher

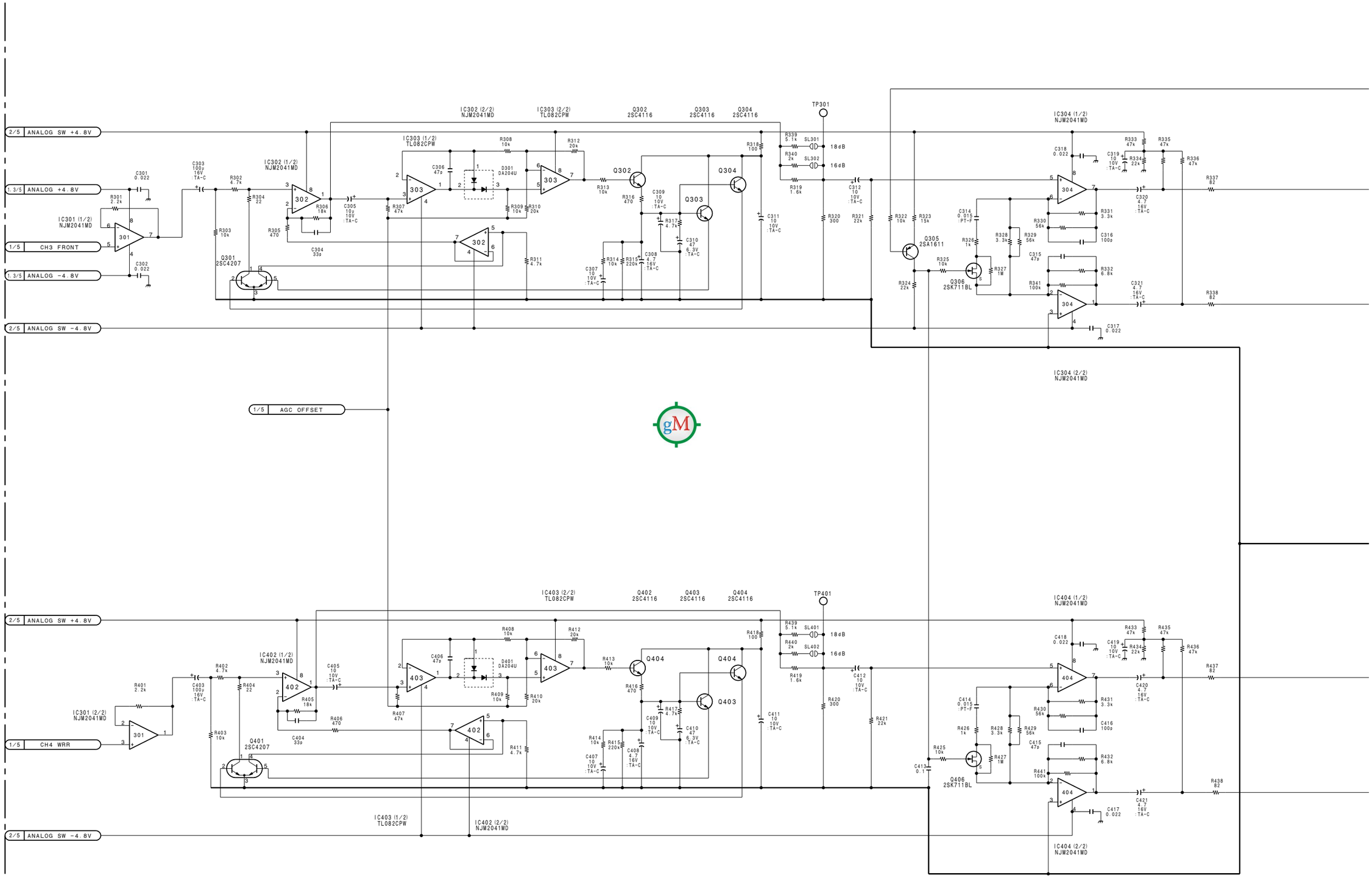

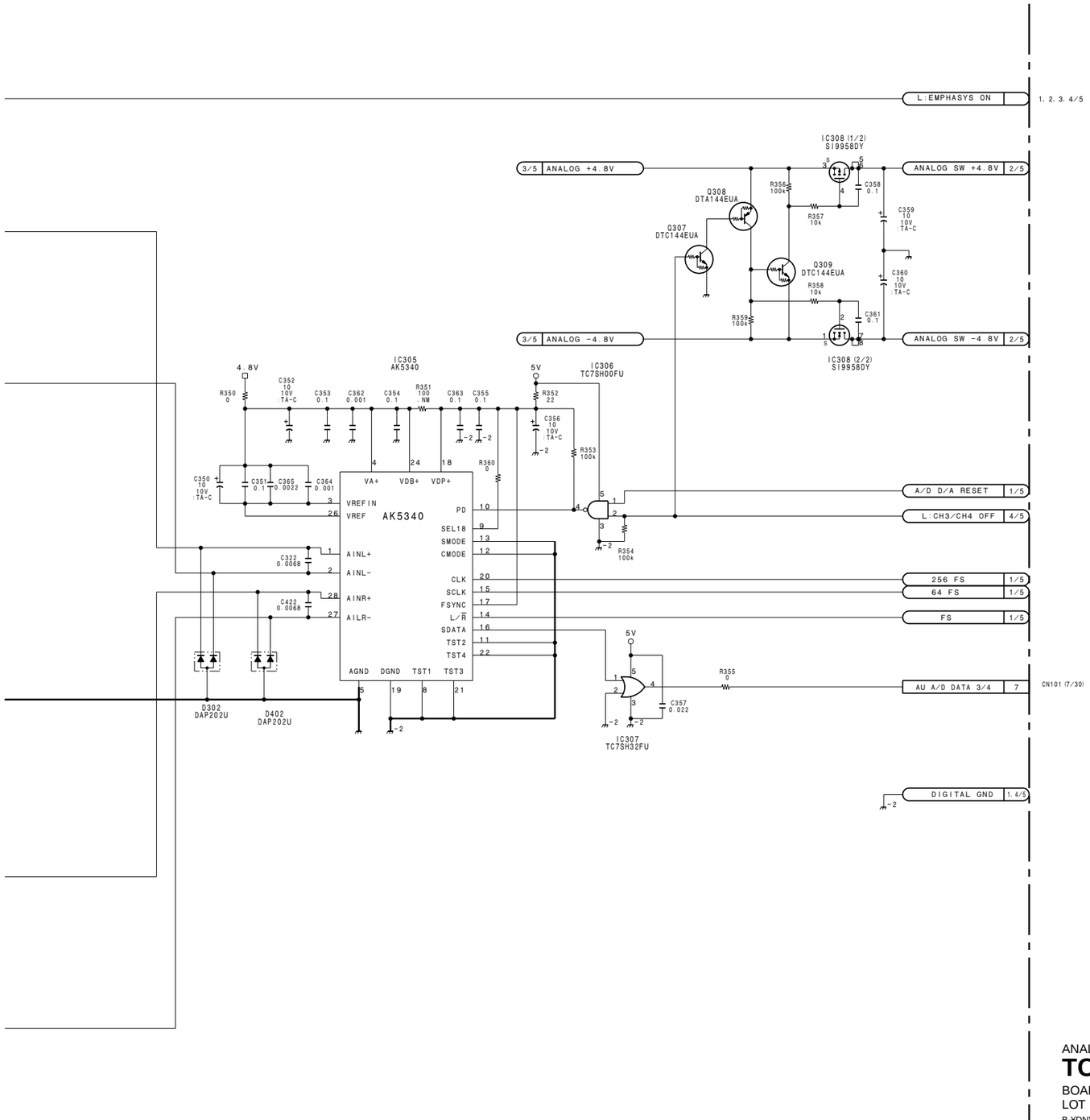

ANALOG AUDIO PROCESSOR, TIME CODE GENERATOR

TC-80 (2/5)

BOARD NO. 1-662-324-11
LOT NO. 605-
B-¥DNV-5-TC80-X1

TC-80 (3/5) Camera/Video(DNV-5)

DNV-5(SY):S/N 10001 and Higher
DNV-5(J):S/N 30001 and Higher

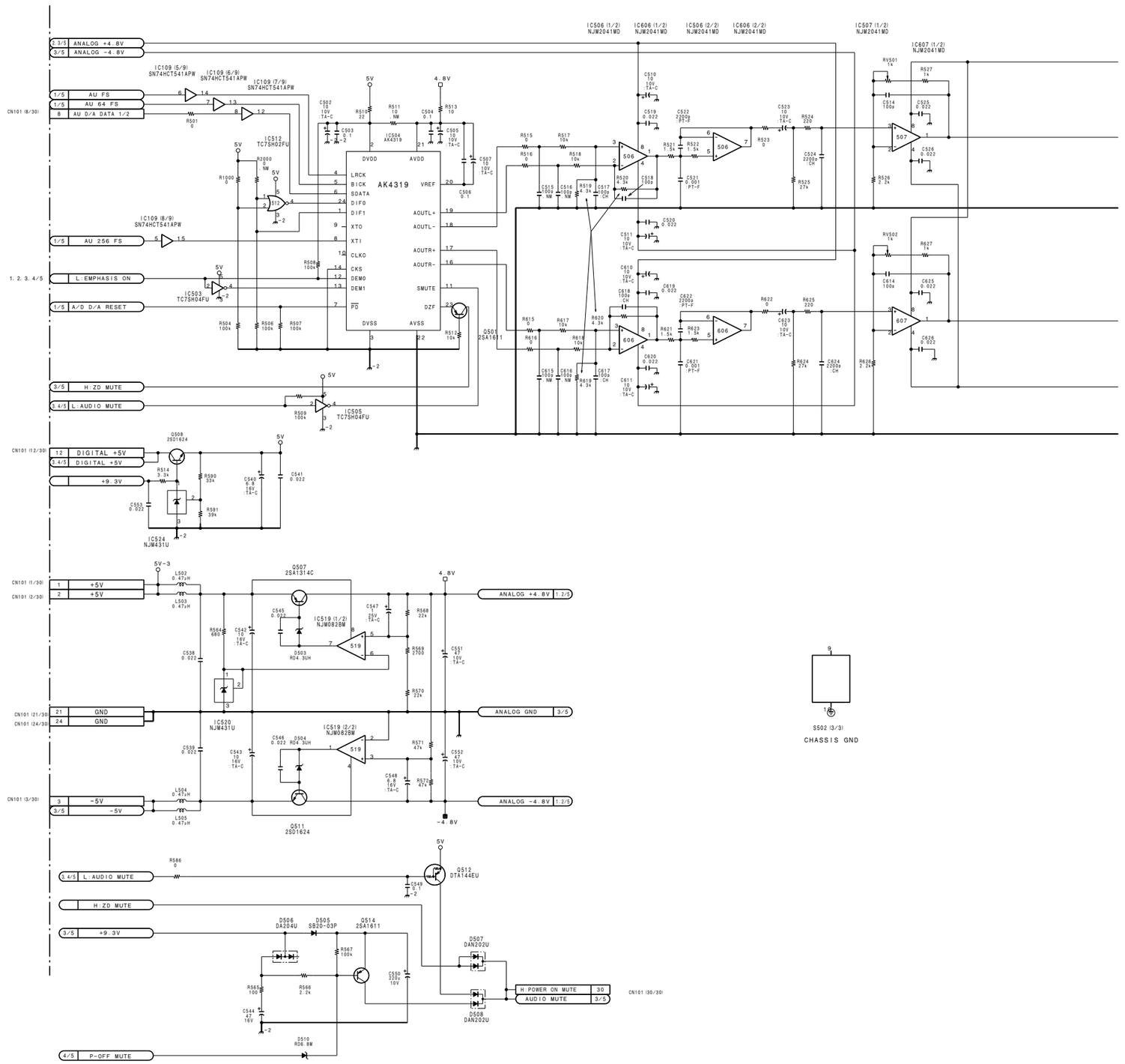

5-66

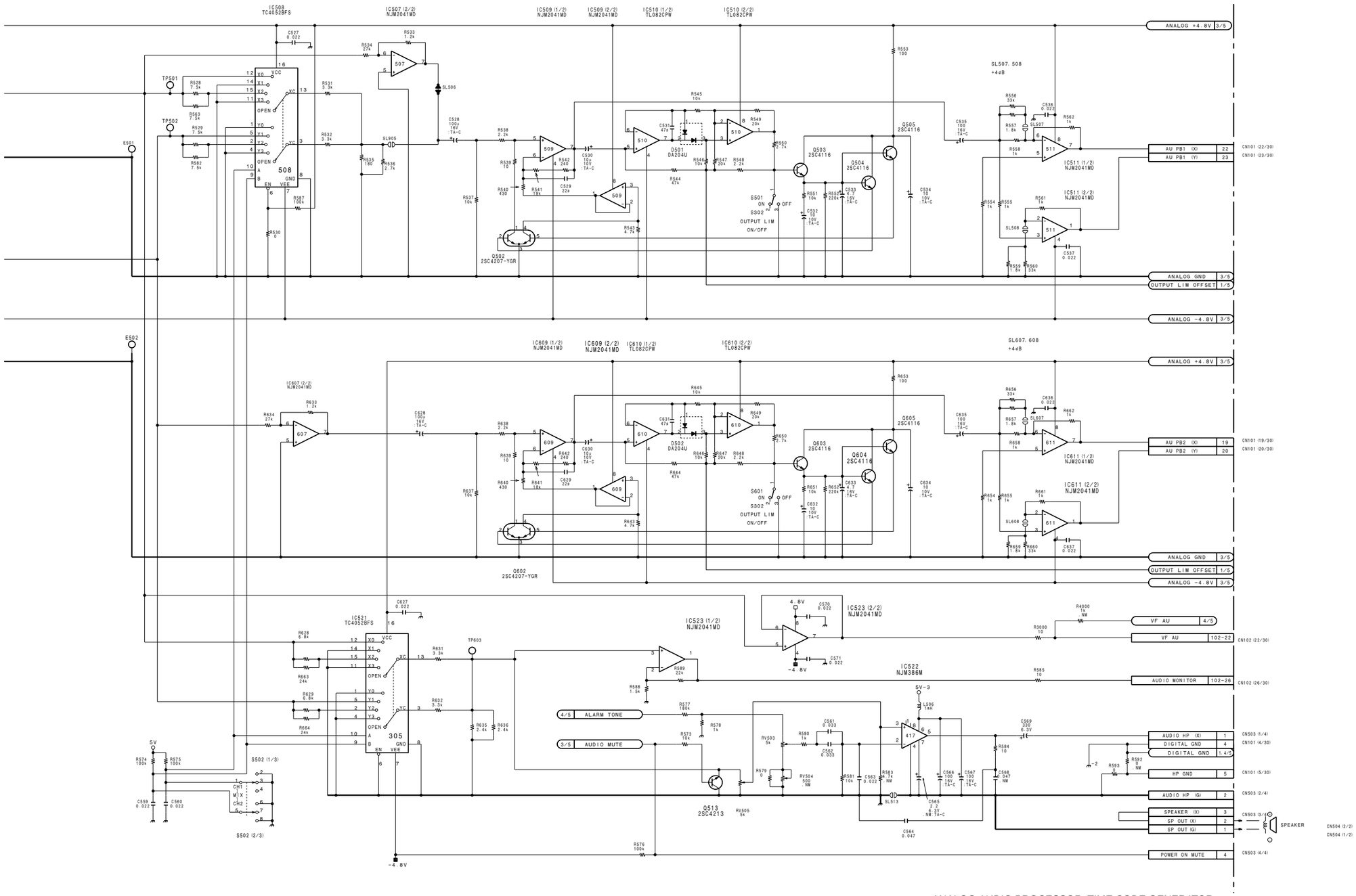

ANALOG AUDIO PROCESSOR, TIME CODE GENERATOR

TC-80 (3/5)

BOARD NO. 1-662-324-11

LOT NO. 605-

B-¥DNV-5-TC80-X1

DNV-5(SY):S/N 10001 and Higher
DNV-5(J):S/N 30001 and Higher

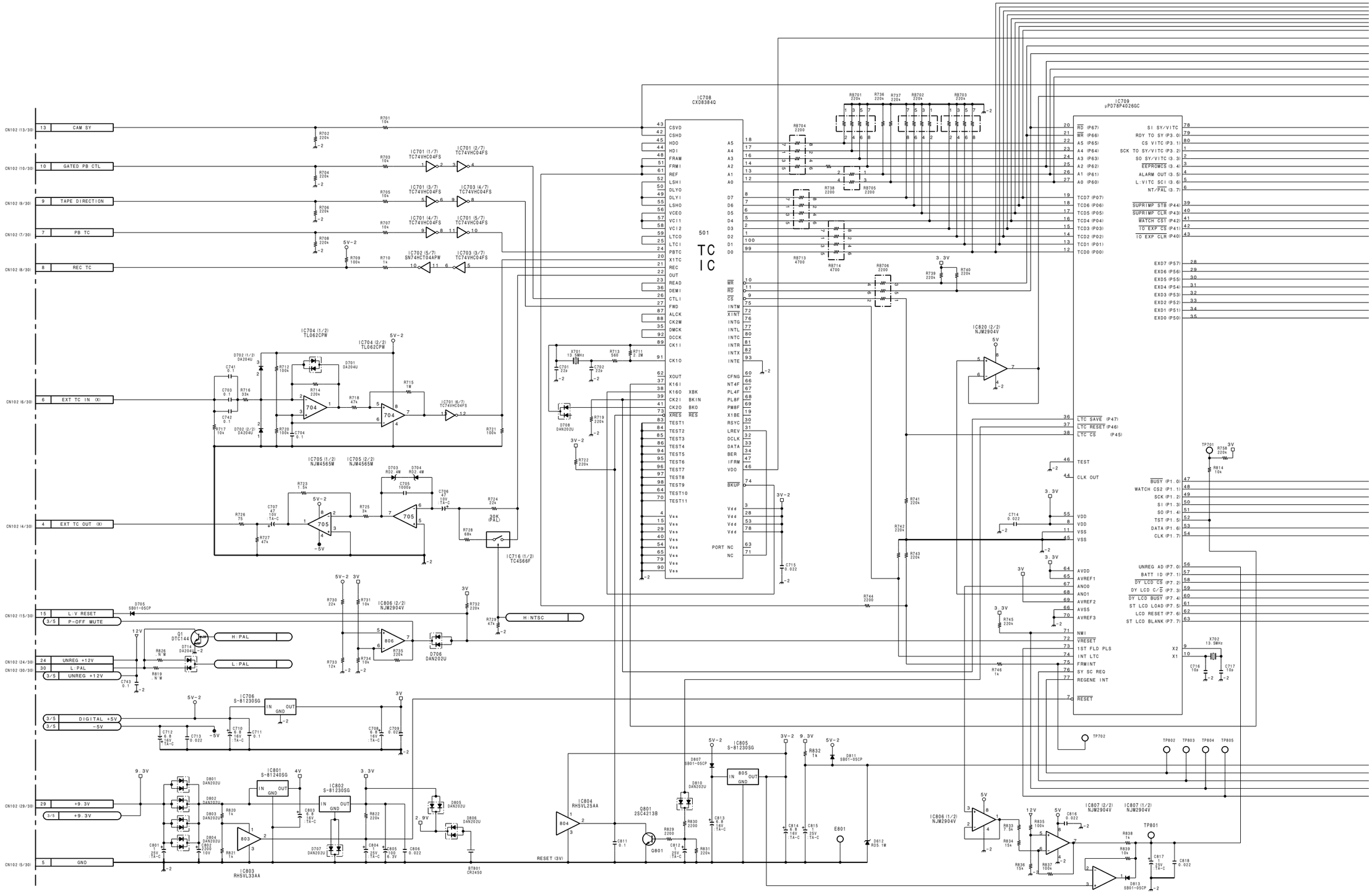

http://getMANUAL.com

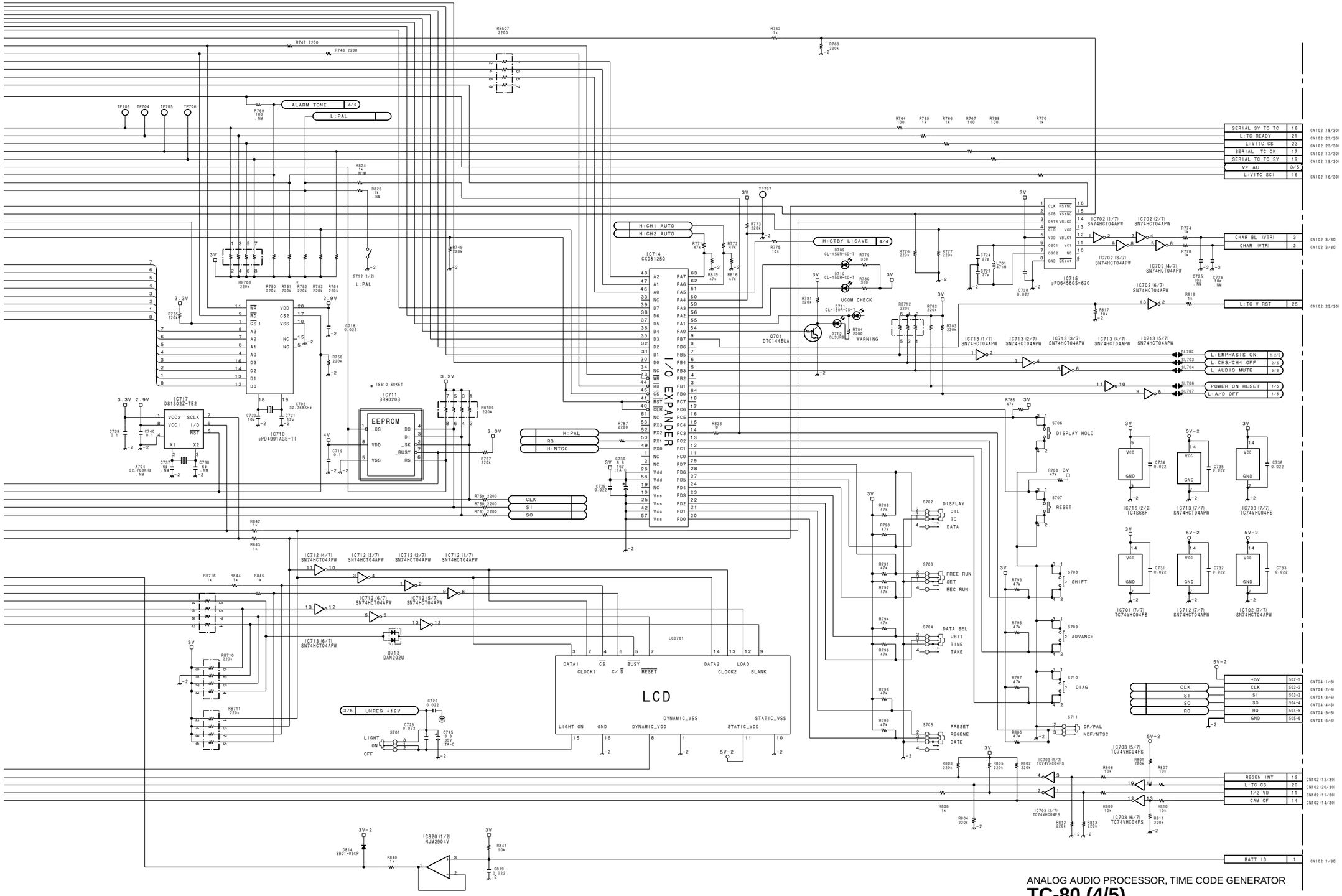

ANALOG AUDIO PROCESSOR, TIME CODE GENERATOR

TC-80 (4/5)

BOARD NO. 1-662-324-11
LOT NO. 605-
B-¥DNV-5-TC80-X1

DNV-5(SY):S/N 10001 and Higher
DNV-5(J):S/N 30001 and Higher

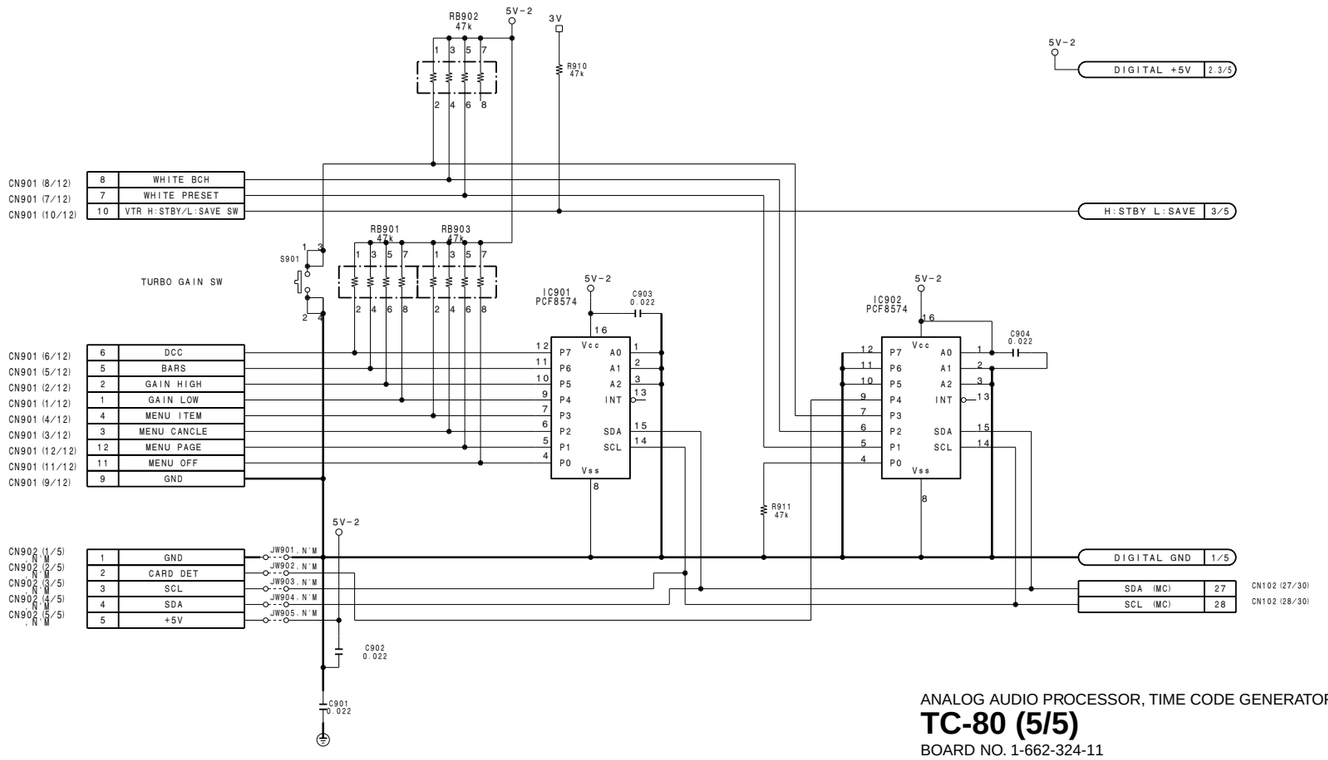

ANALOG AUDIO PROCESSOR, TIME CODE GENERATOR

TC-80 (5/5)

BOARD NO. 1-662-324-11
LOT NO. 605-
B-¥DNV-5-TC80-X1

DNW-7/90/90WS(SY):S/N 10001 and Higher
DNW-7/90/90WS(J):S/N 30001 and Higher
DNW-7P/90P/90WSP(SY):S/N 40001 and Higher

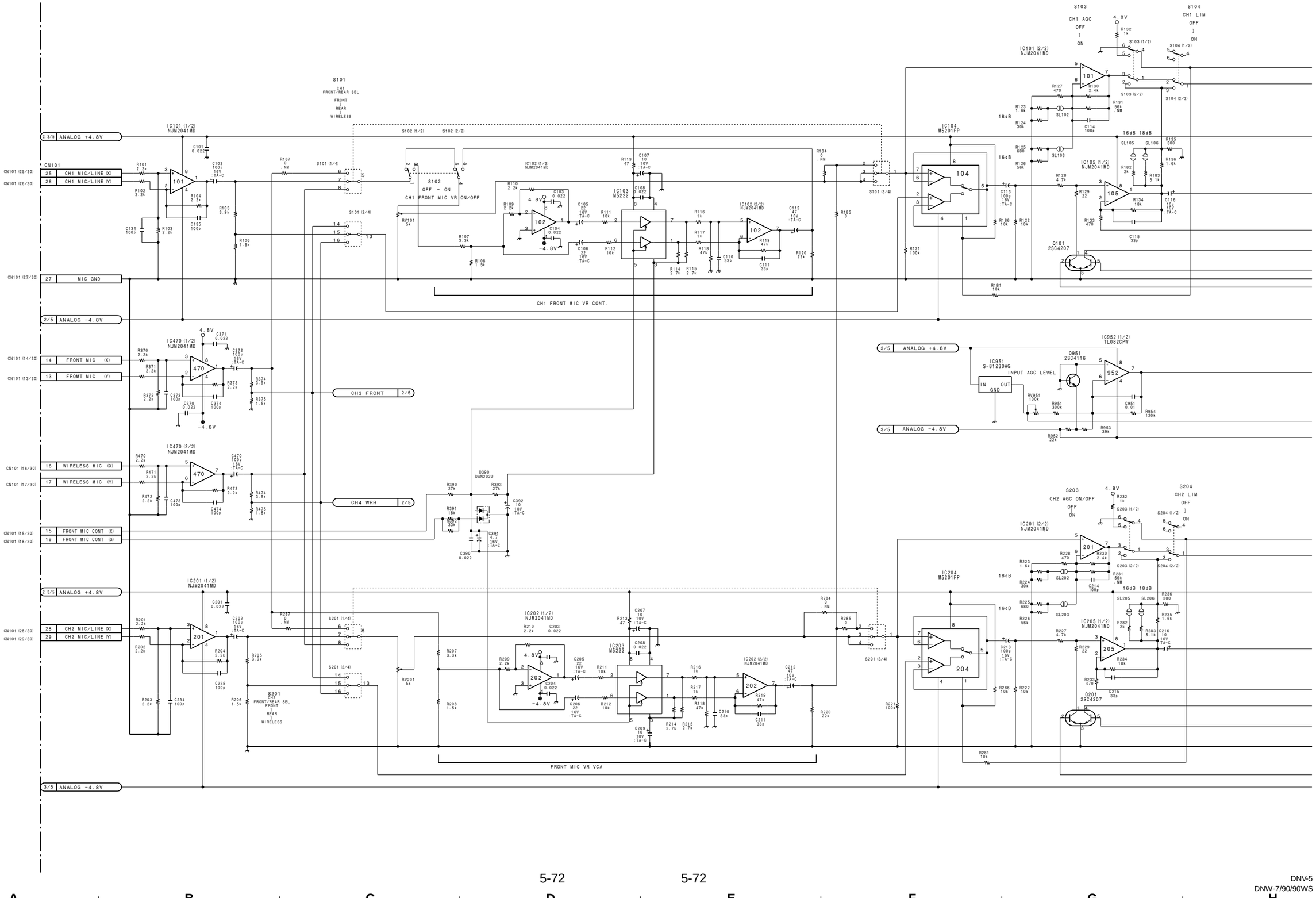

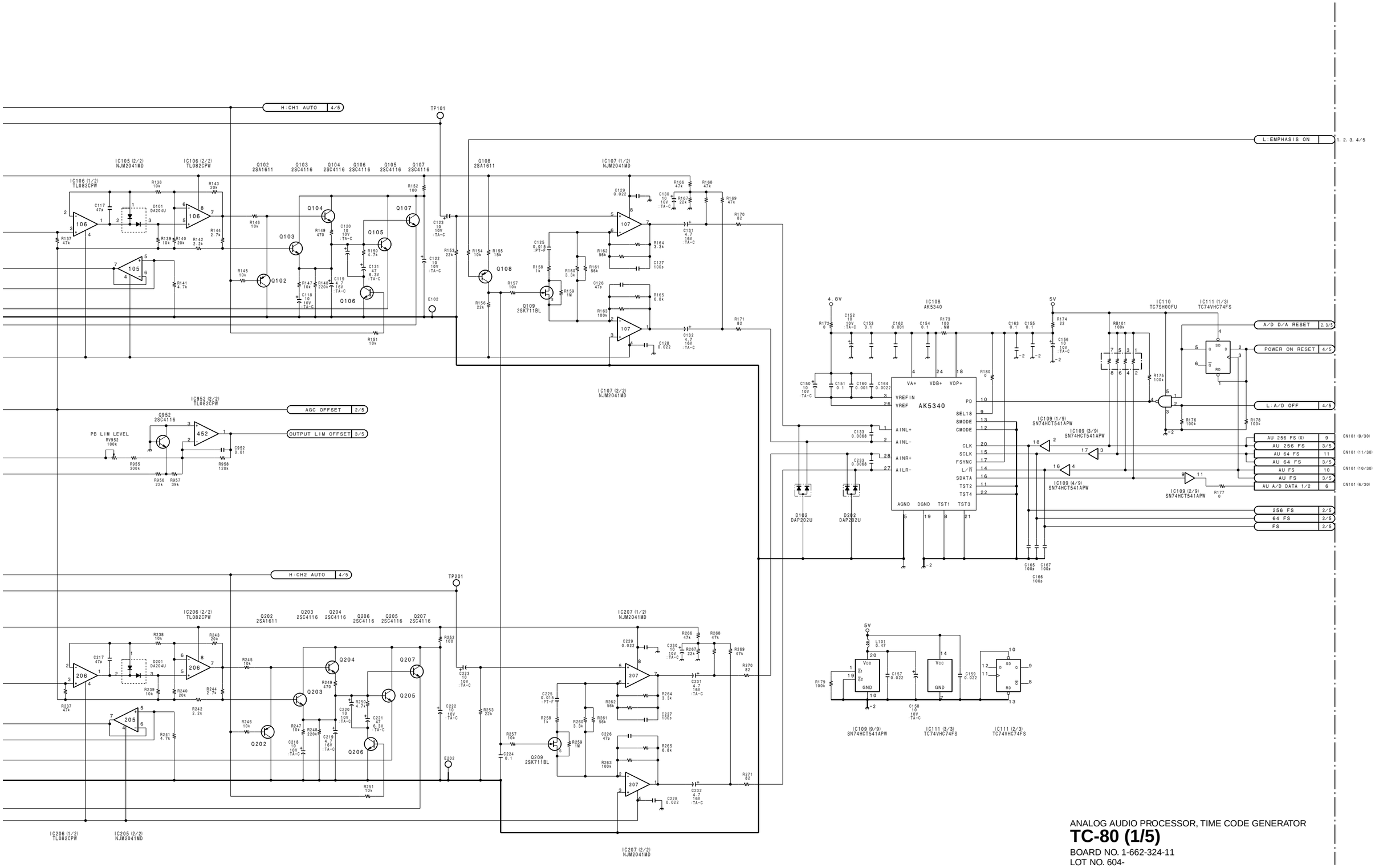

ANALOG AUDIO PROCESSOR, TIME CODE GENERATOR

TC-80 (1/5)

BOARD NO. 1-662-324-11
LOT NO. 604-
B-¥DNW7-TC80-X1

DNW-7/90/90WS(SY):S/N 10001 and Higher
DNW-7/90/90WS(J):S/N 30001 and Higher
DNW-7P/90P/90WSP(SY):S/N 40001 and Higher

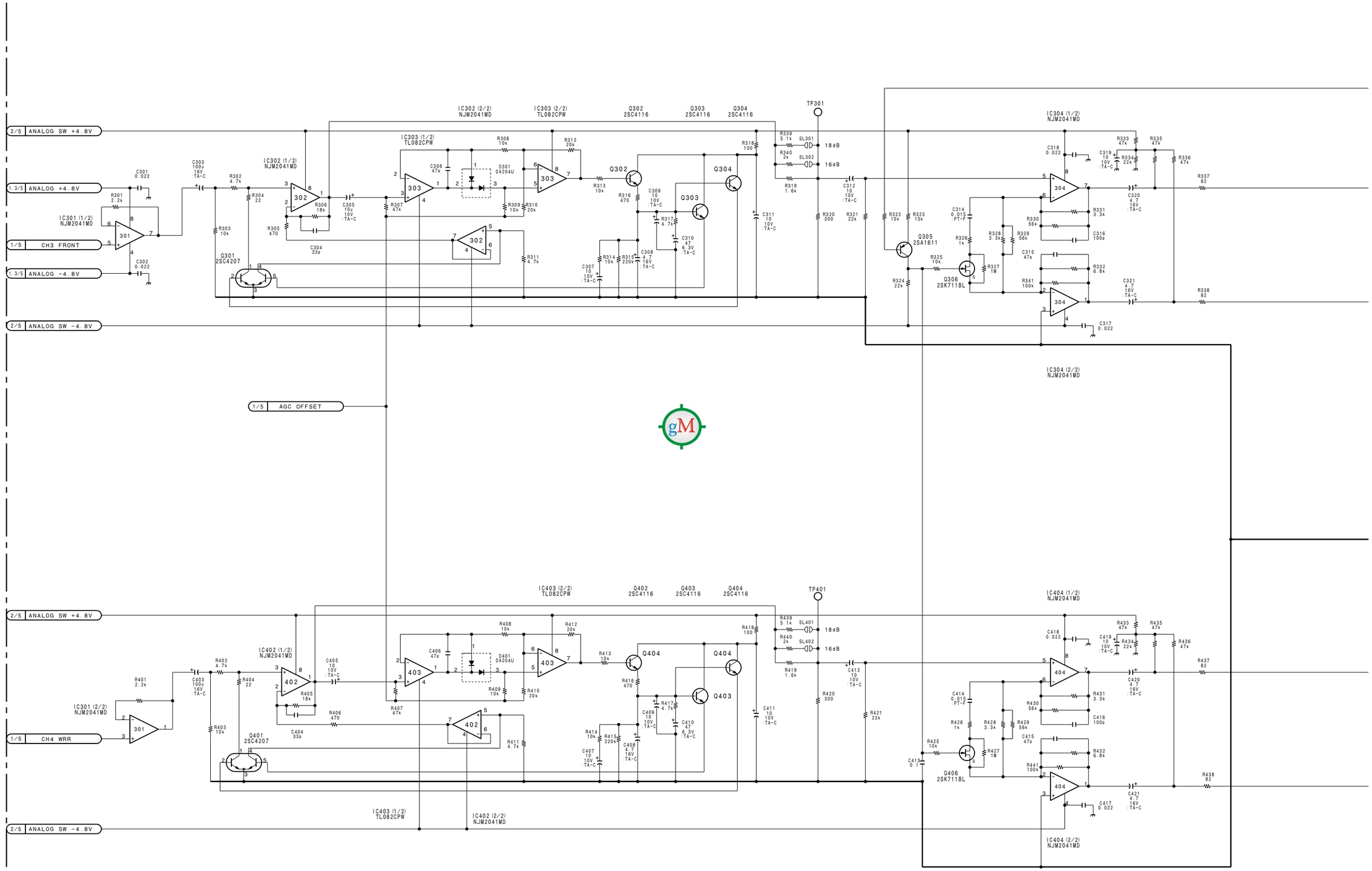

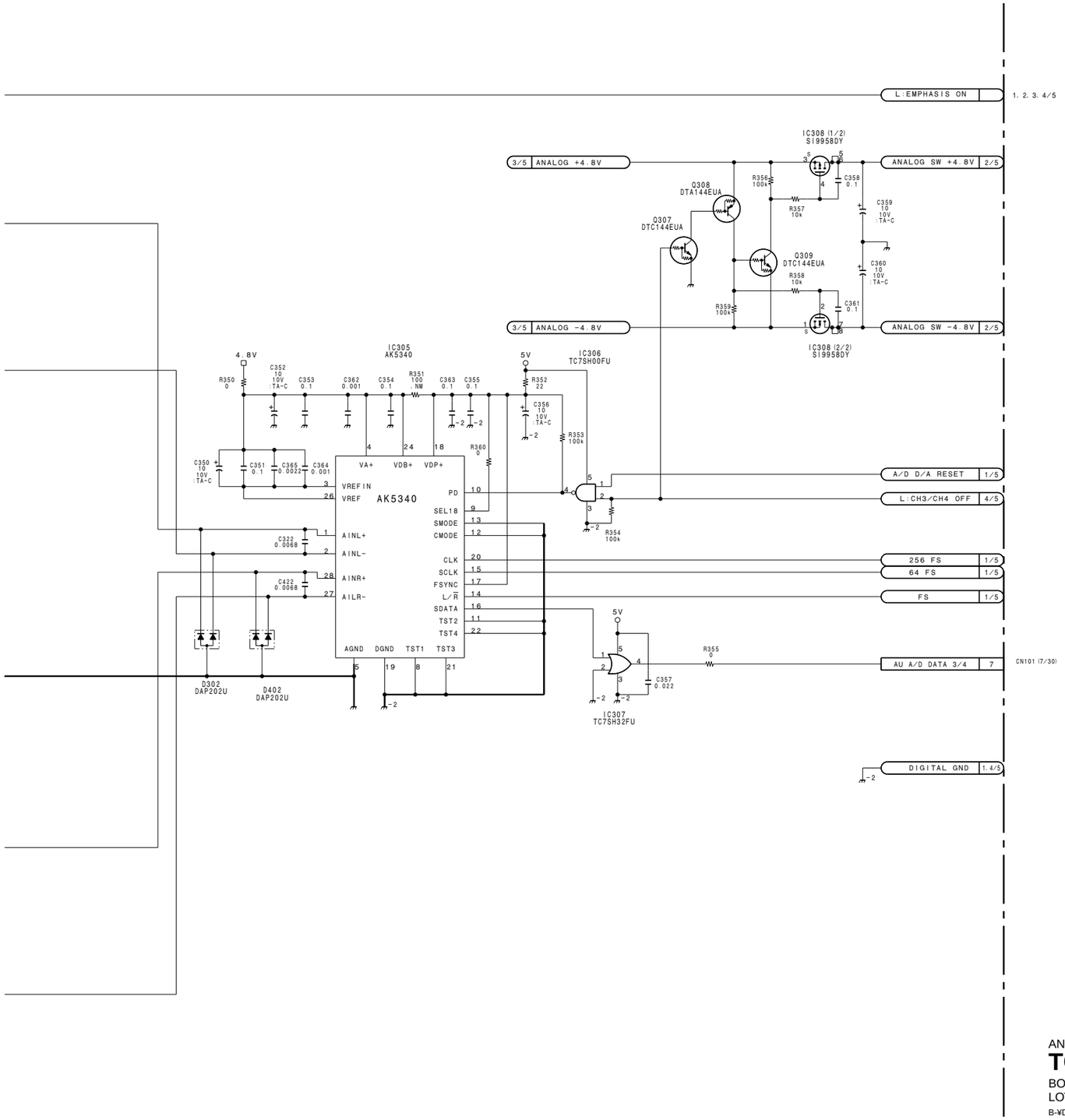

ANALOG AUDIO PROCESSOR, TIME CODE GENERATOR

TC-80 (2/5)

BOARD NO. 1-662-324-11
LOT NO. 604-
B-¥DNW7-TC80-X1

TC-80 (3/5) Camera/Video(DNW-7/90/90WS)

DNW-7/90/90WS(SY):S/N 10001 and Higher
DNW-7/90/90WS(J):S/N 30001 and Higher
DNW-7P/90P/90WSP(SY):S/N 40001 and Higher

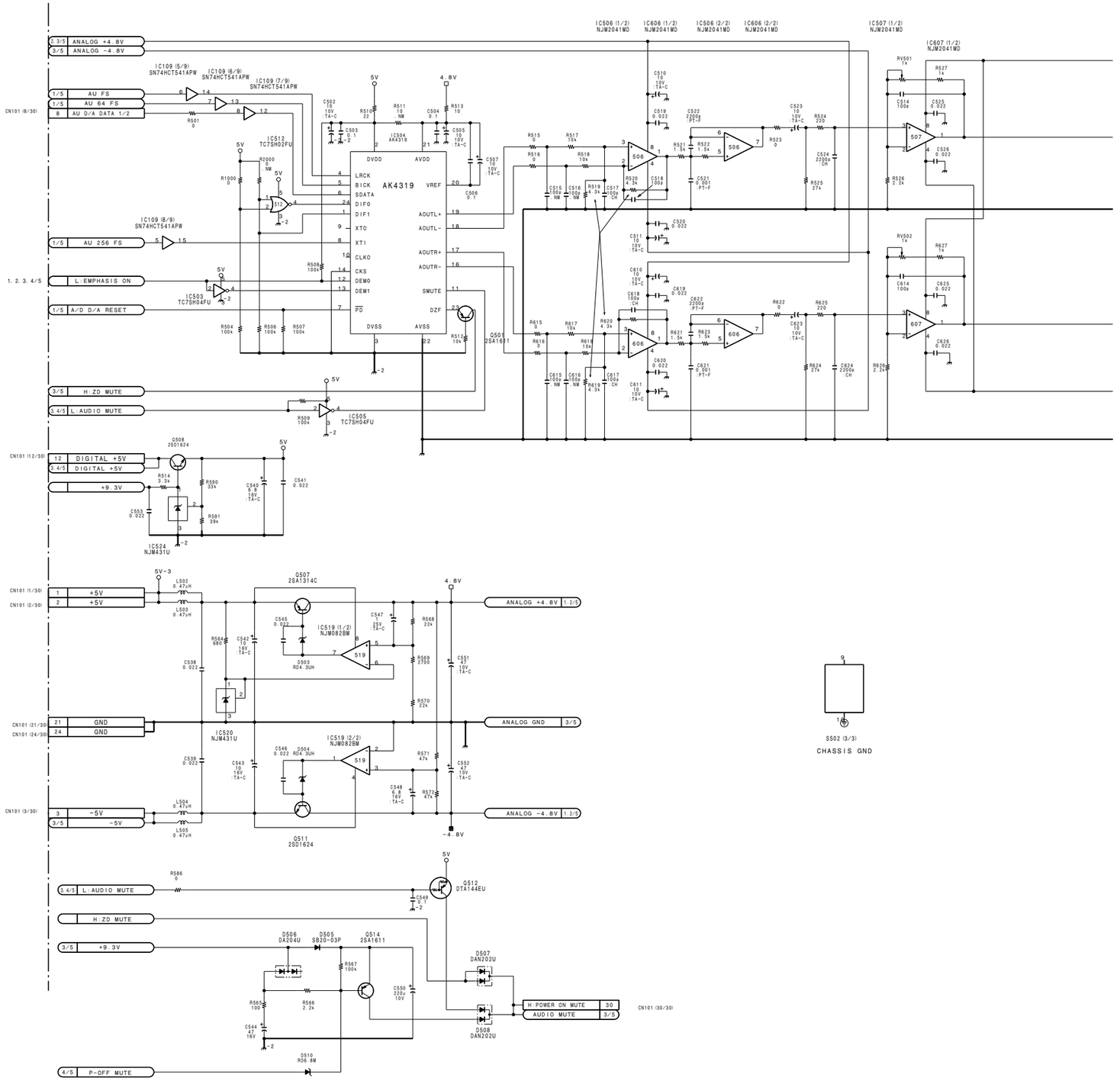

5-76

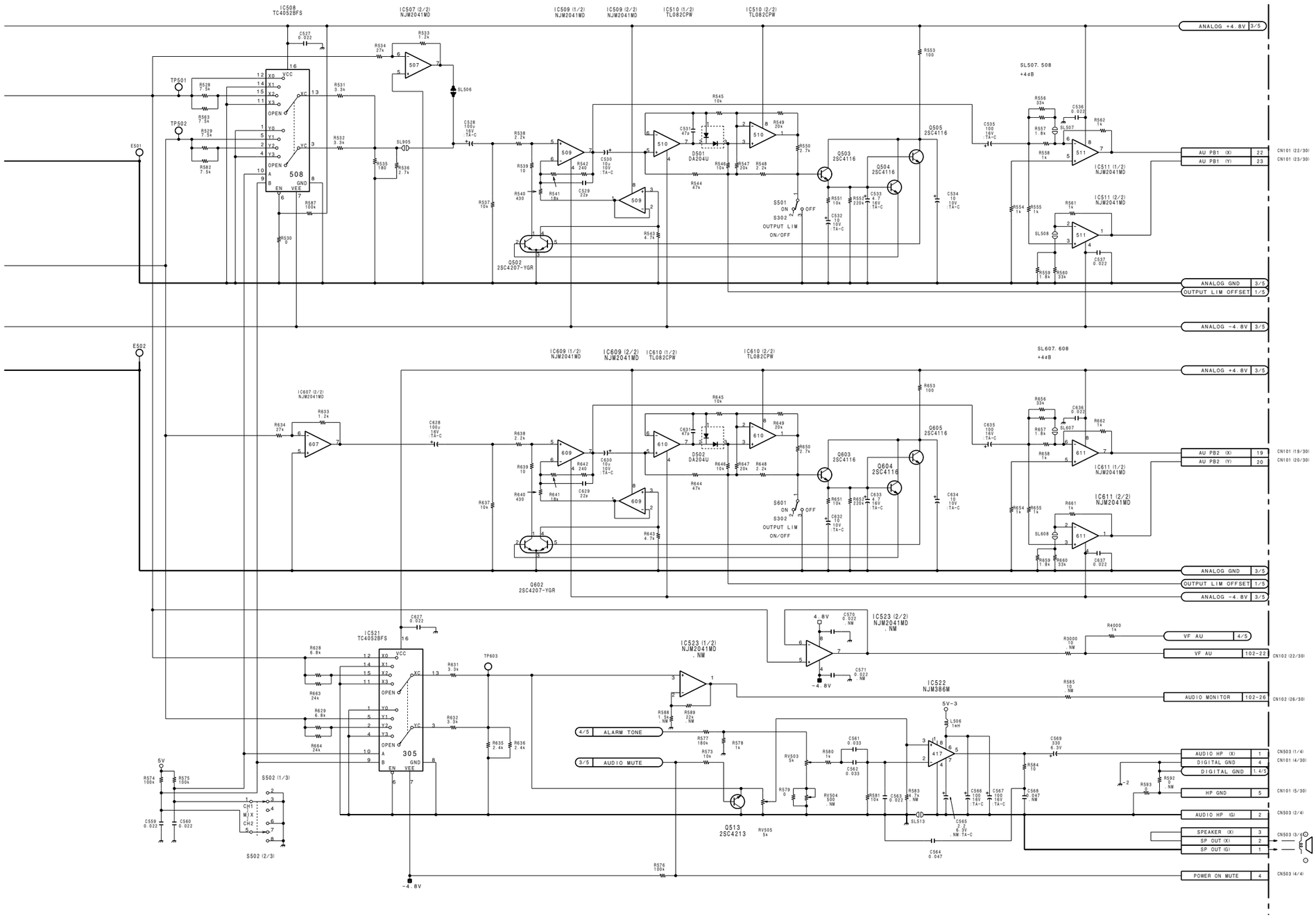

ANALOG AUDIO PROCESSOR, TIME CODE GENERATOR

TC-80 (3/5)

BOARD NO. 1-662-324-11
LOT NO. 604-
B-¥DNW7-TC80-X1

DNW-7/90/90WS(SY):S/N 10001 and Higher
DNW-7/90/90WS(J):S/N 30001 and Higher
DNW-7P/90P/90WSP(SY):S/N 40001 and Higher

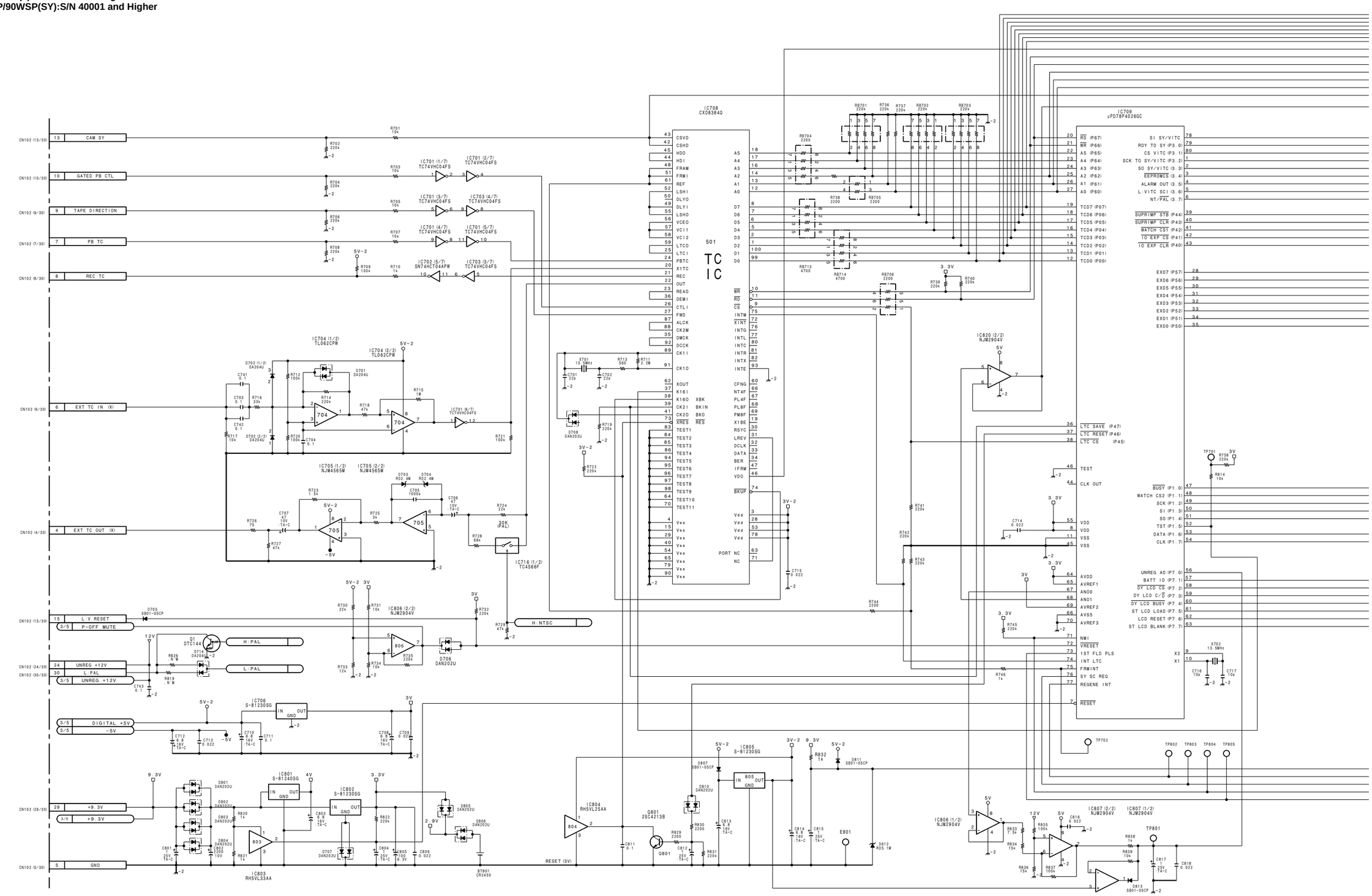

http://getMANUAL.com

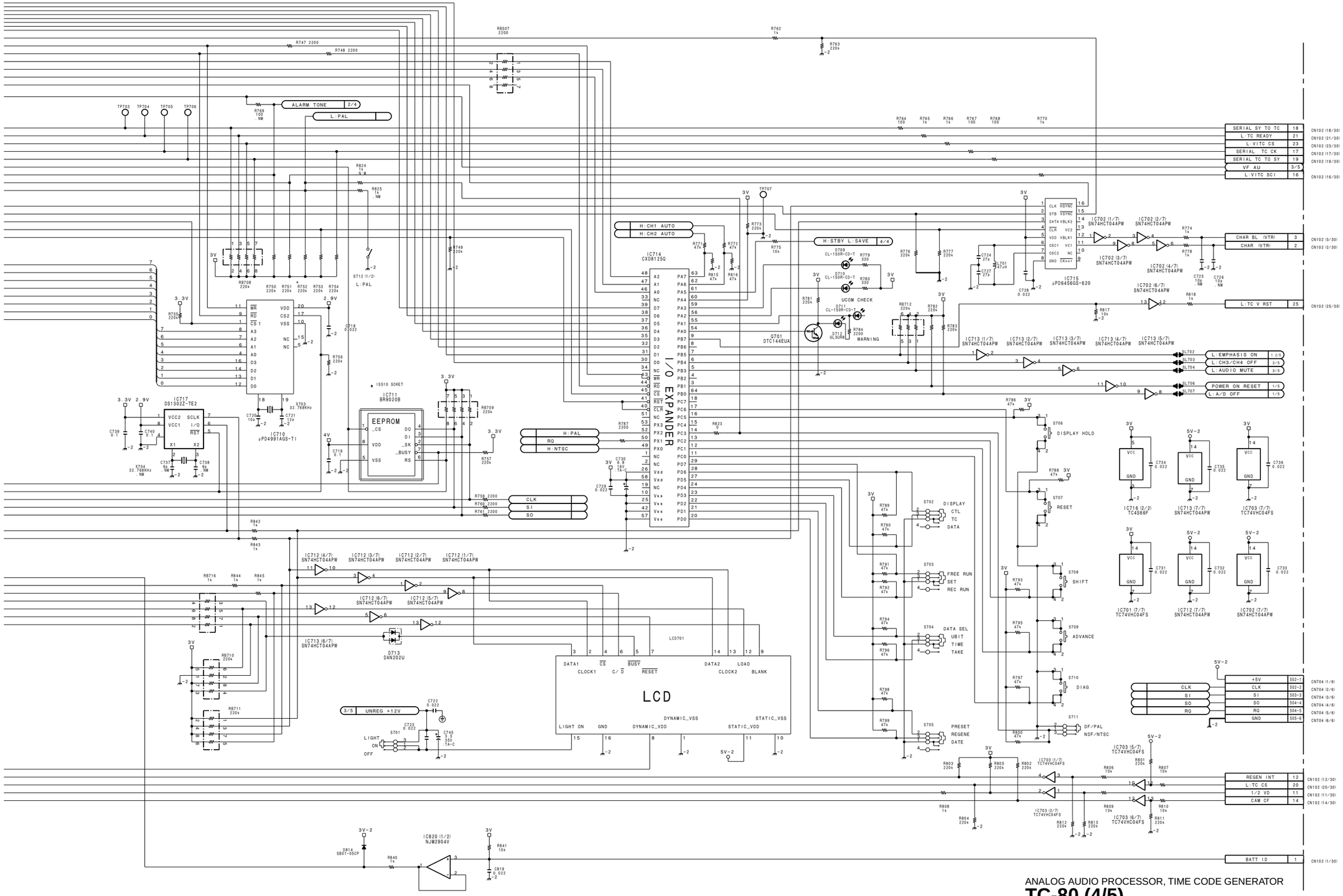

ANALOG AUDIO PROCESSOR, TIME CODE GENERATOR

TC-80 (4/5)

BOARD NO. 1-662-324-11
LOT NO. 604-

B-¥DNW7-TC80-X1

DNW-7/90/90WS(SY):S/N 10001 and Higher
DNW-7/90/90WS(J):S/N 30001 and Higher
DNW-7P/90P/90WSP(SY):S/N 40001 and Higher

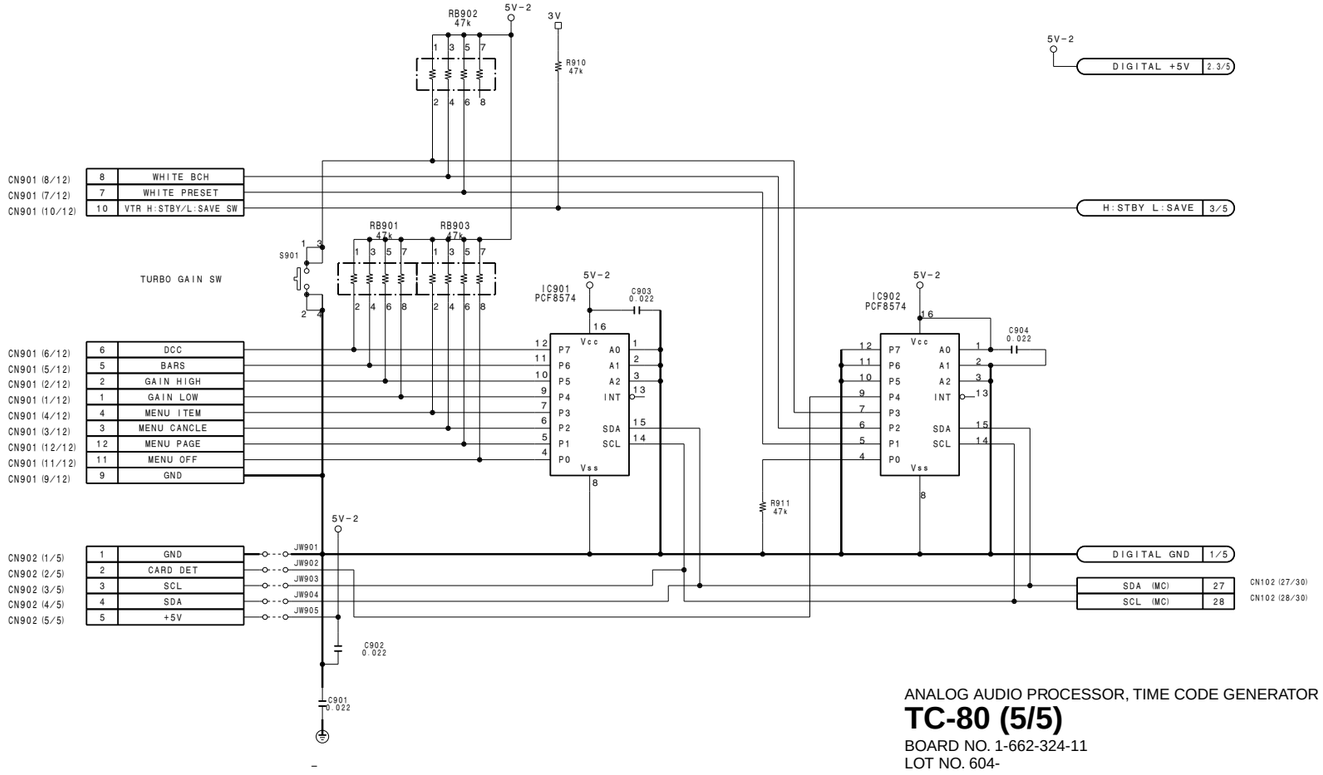

ANALOG AUDIO PROCESSOR, TIME CODE GENERATOR

TC-80 (5/5)

BOARD NO. 1-662-324-11
LOT NO. 604-
B-¥DNW7-TC80-X1

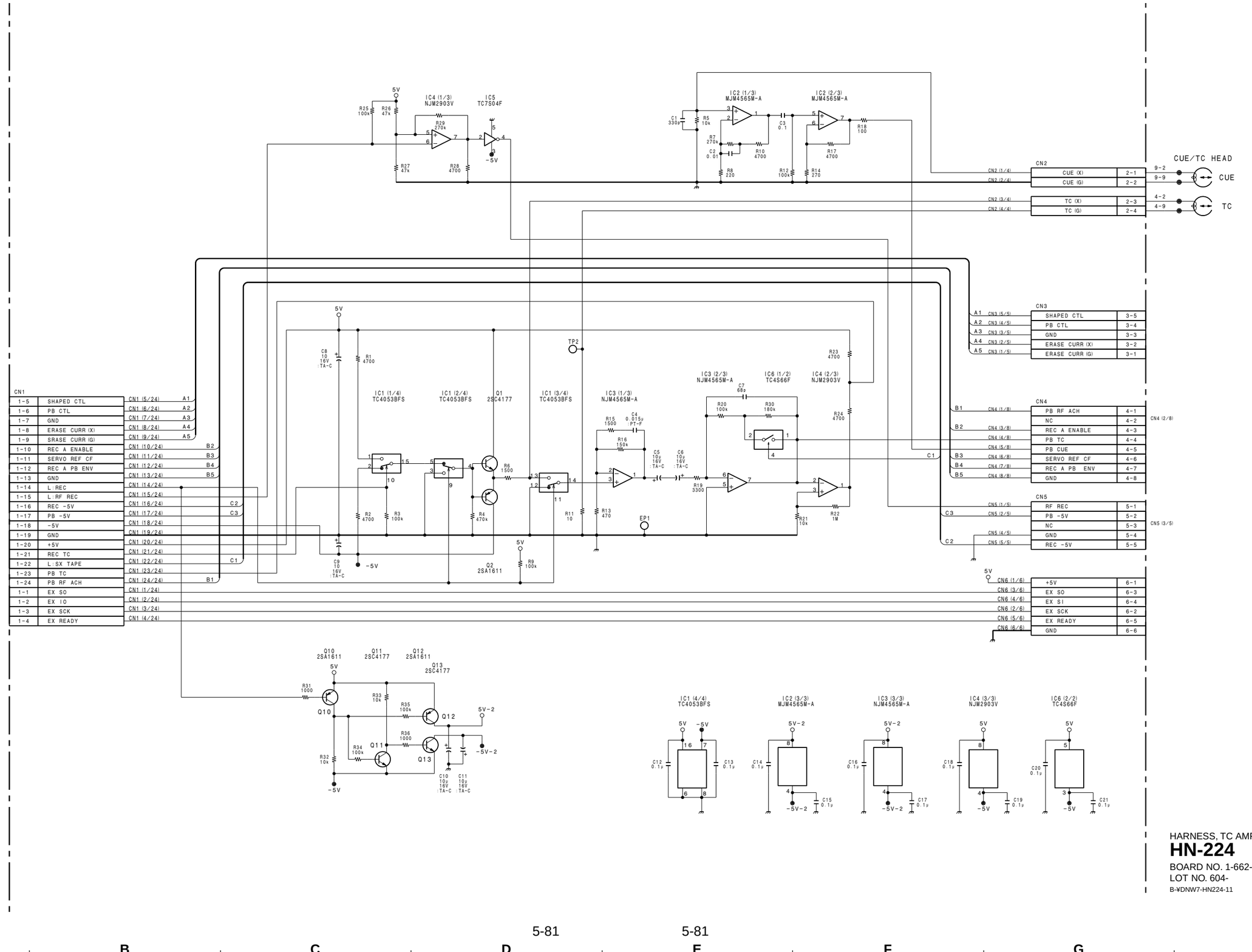

HARNESS, TC AMP
HN-224
BOARD NO. 1-662-315-11
LOT NO. 604-
B-¥DNW7-HN224-11

DNV-5(SY):S/N 10001 and Higher
DNV-5(J):S/N 30001 and Higher
DNW-7/90/90WS(SY):S/N 10001 and Higher
DNW-7/90/90WS(J):S/N 30001 and Higher
DNW-7P/90P/90WSP(SY):S/N 40001 and Higher

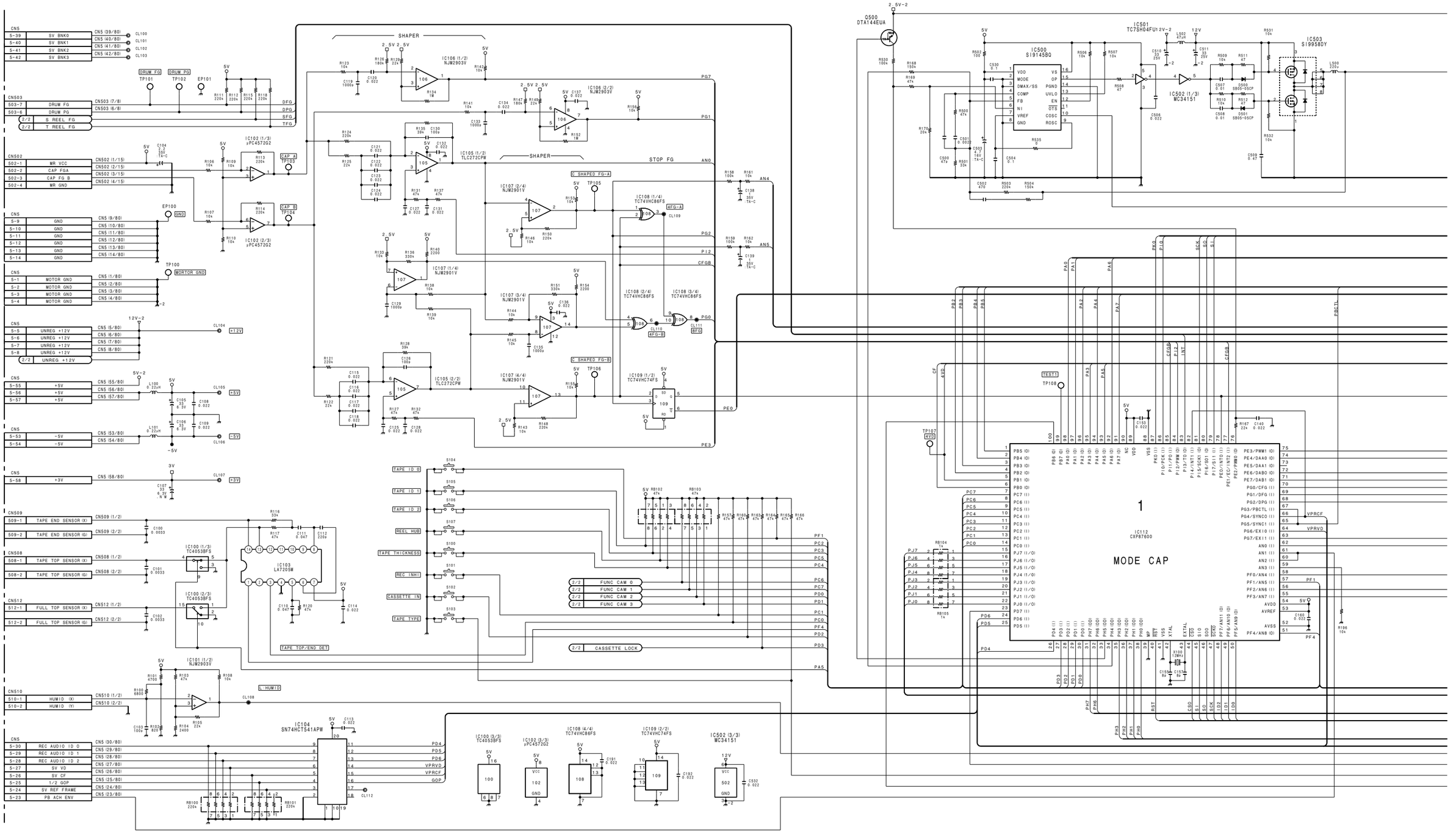

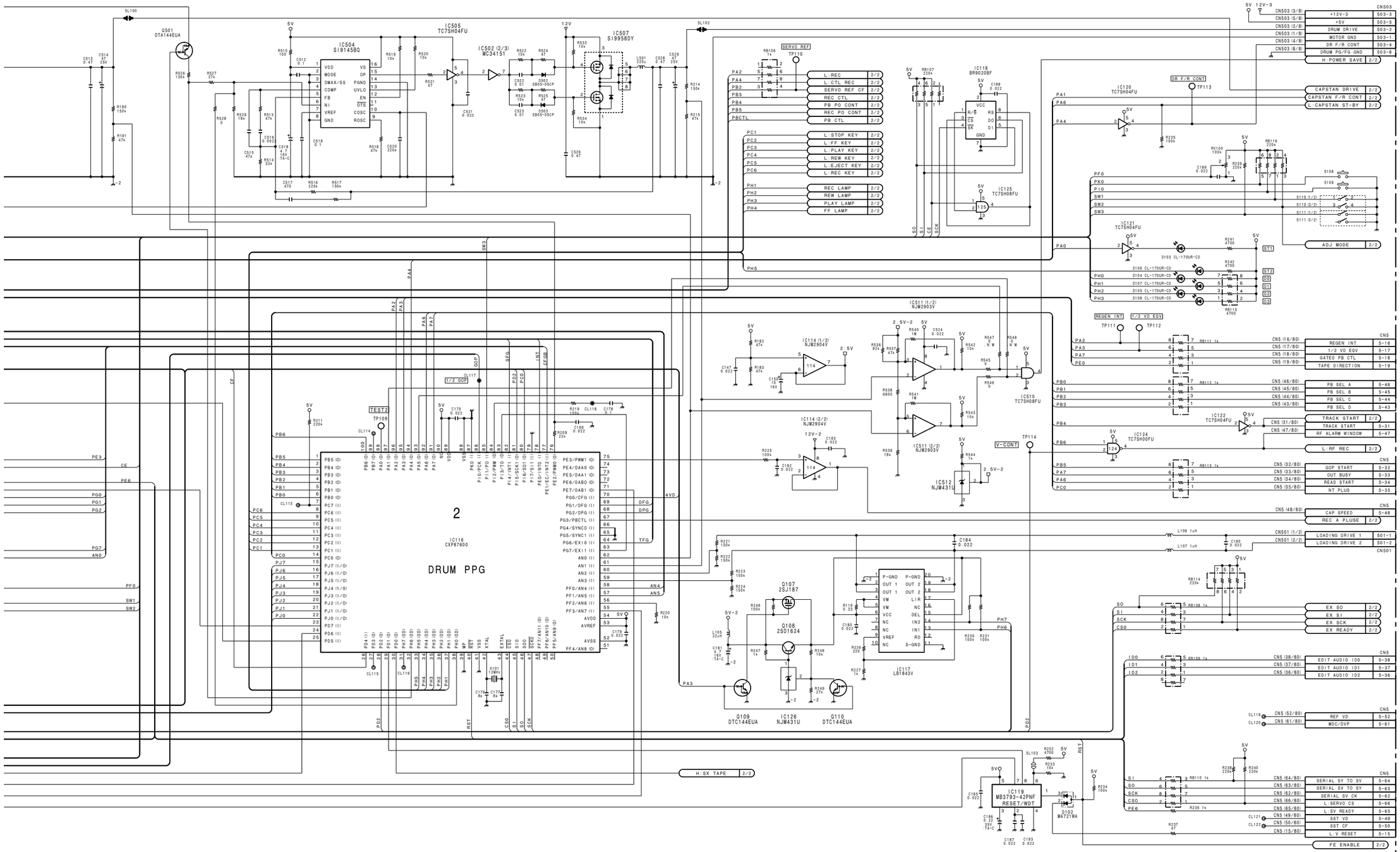

SERVO CONTROLLER

MDC-5 (1/2)

BOARD NO. 1-662-336-11

LOT NO. 604-

B-¥DNW7-MDC5-X1

MDC-5 (2/2) Drum/Servo

DNV-5(SY):S/N 10001 and Higher
DNV-5(J):S/N 30001 and Higher
DNW-7/90/90WS(SY):S/N 10001 and Higher
DNW-7/90/90WS(J):S/N 30001 and Higher
DNW-7P/90P/90WSP(SY):S/N 40001 and Higher

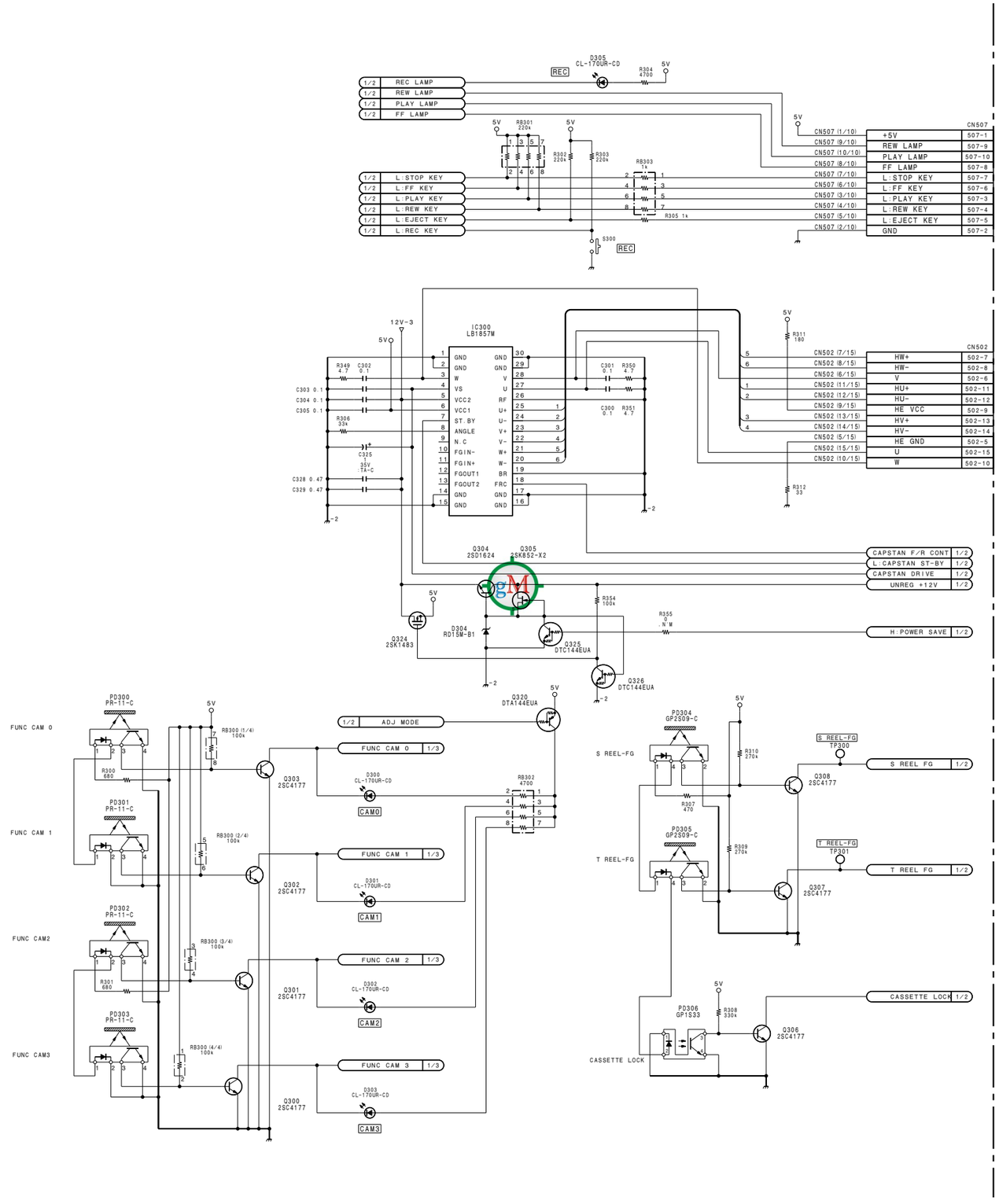

5-84

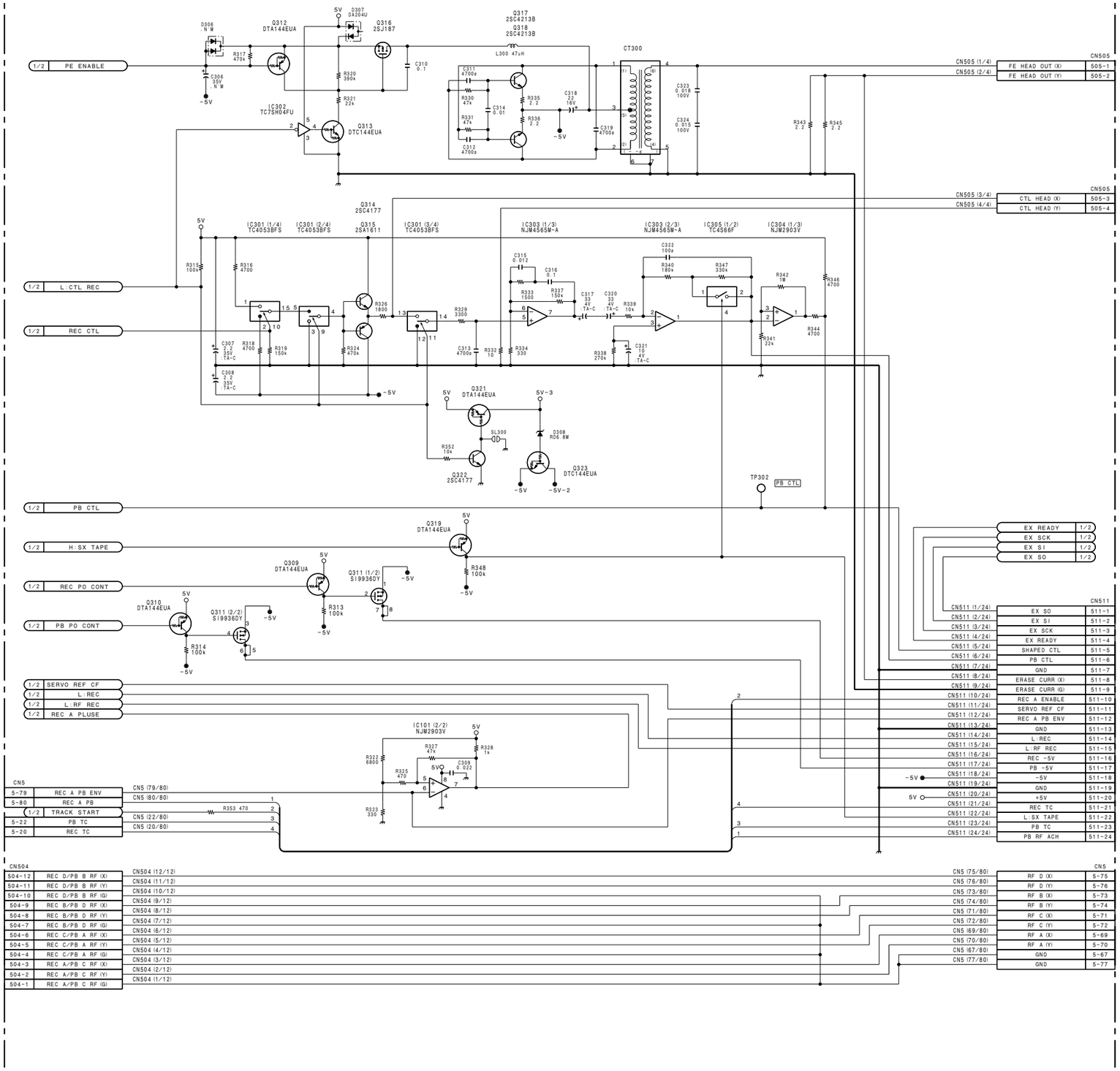

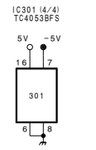

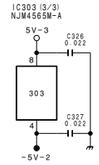

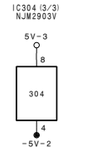

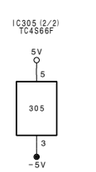

SERVO CONTROLLER
MDC-5 (2/2)
BOARD NO. 1-662-336-11
LOT NO. 604-
B-¥DNW7-MDC5-X1

DNV-5(SY):S/N 10001 and Higher
DNV-5(J):S/N 30001 and Higher
DNW-7/90/90WS(SY):S/N 10001 and Higher
DNW-7/90/90WS(J):S/N 30001 and Higher
DNW-7P/90P/90WSP(SY):S/N 40001 and Higher

DRUM DRIVE IC

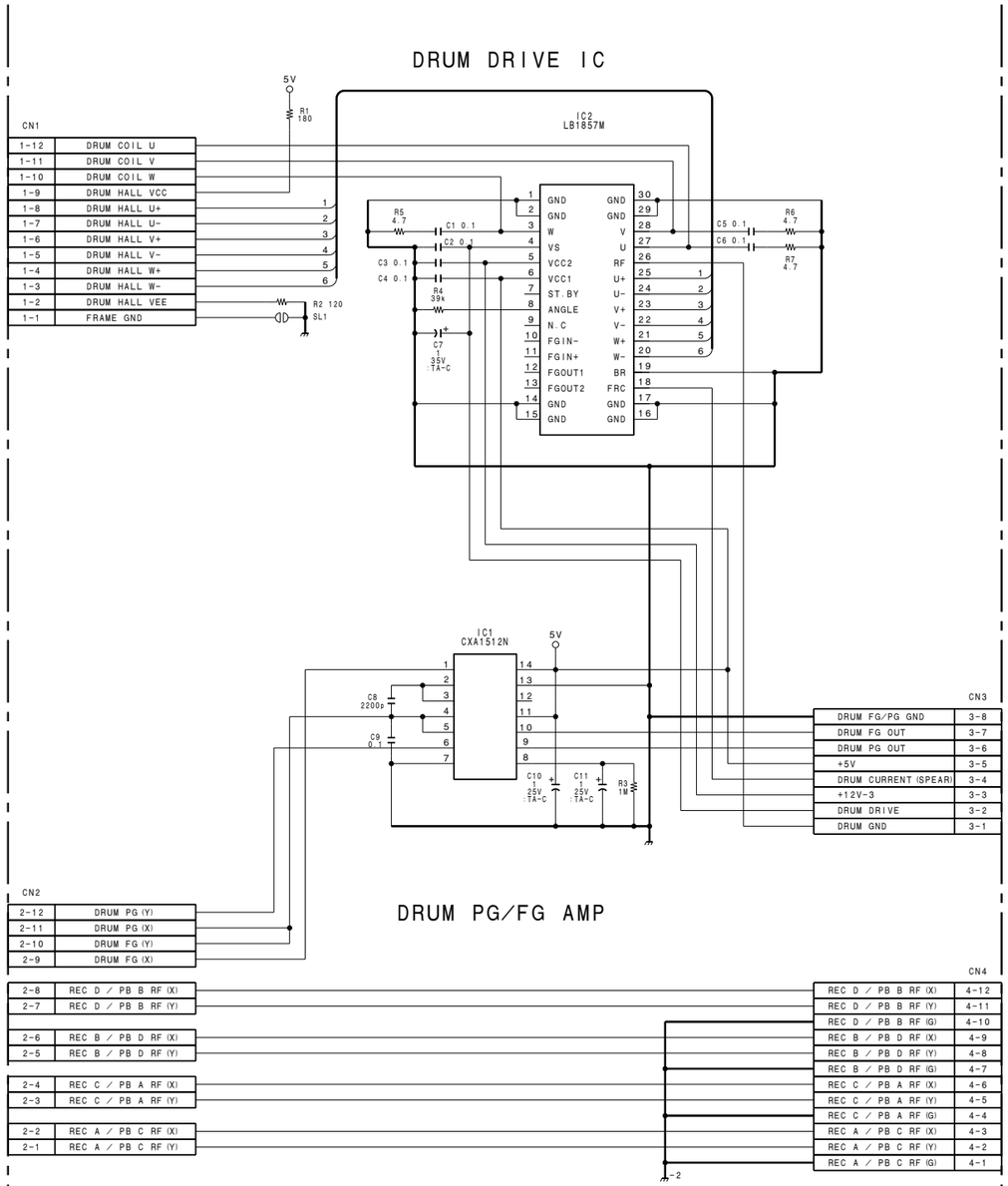

DRUM MOTOR DRIVER
MDR-1
BOARD NO. 1-662-314-11
LOT NO. 604-
B-¥DNW7-MDR1-11

DNW-7/90/90WS(SY):S/N 10001 and Higher
DNW-7/90/90W(J):S/N 30001 and Higher
DNW-7P/90P/90WSP(SY):S/N 40001 and Higher

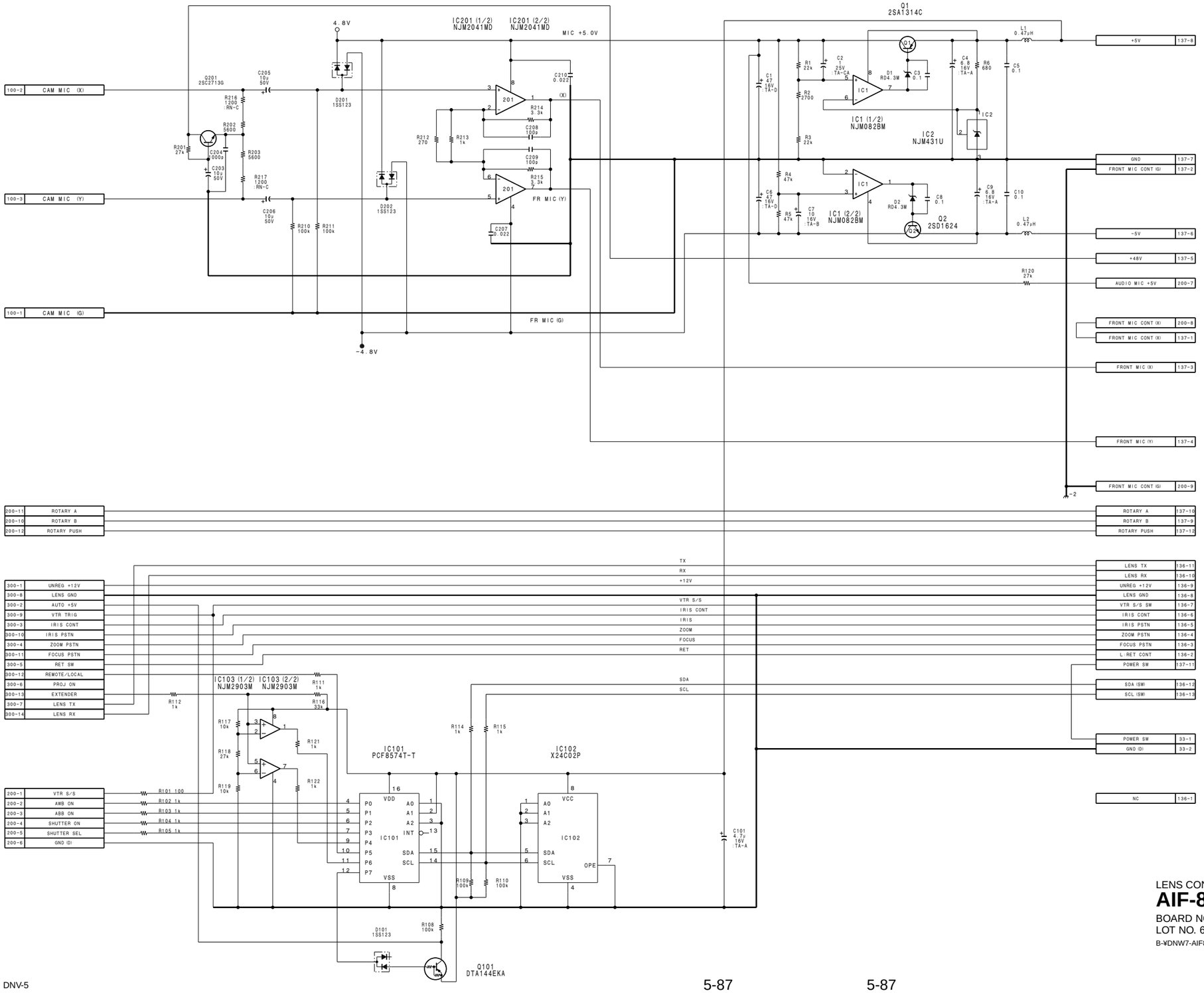

LENS CONTROL, MIC AMP

AIF-8

BOARD NO. 1-662-313-11
LOT NO. 604-
B-¥DNW7-AIF8-X1

DNW-7/90/90WS(SY):S/N 10001 and Higher
DNW-7/90/90WS(J):S/N 30001 and Higher
DNW-7P/90P/90WSP(SY):S/N 40001 and Higher

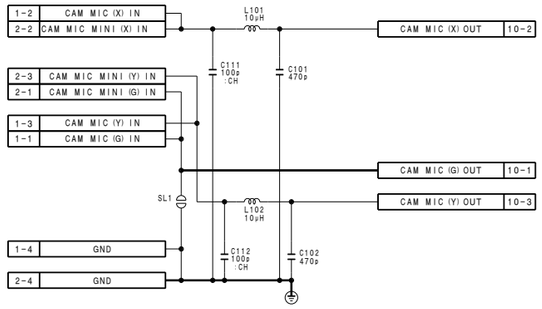

CAMERA MIC PRE-AMP
MA-68
BOARD NO. 1-662-329-11
LOT NO. 604-
B-¥DNW7-MA68-11

http://getMANUAL.com

DNV-5(SY):S/N 10001 and Higher
DNV-5(J):S/N 30001 and Higher
DNW-7/90/90WS(SY):S/N 10001 and Higher
DNW-7/90/90W(J):S/N 30001 and Higher
DNW-7P/90P/90WSP(SY):S/N 40001 and Higher

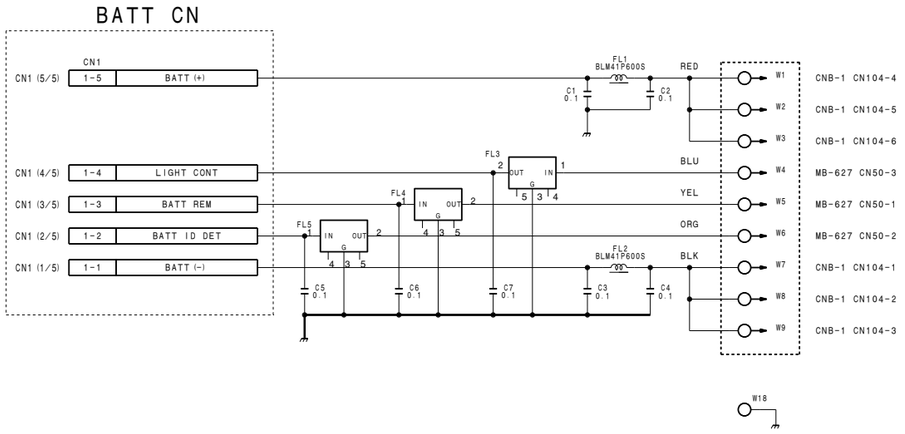

BATTERY DC FILTER
DC-87
BOARD NO. 1-662-332-11
LOT NO. 604-
B-¥DNW7-DC87-12

DNV-5(SY):S/N 10001 and Higher
DNV-5(J):S/N 30001 and Higher
DNW-7/90/90WS(SY):S/N 10001 and Higher
DNW-7/90/90W(J):S/N 30001 and Higher
DNW-7P/90P/90WSP(SY):S/N 40001 and Higher

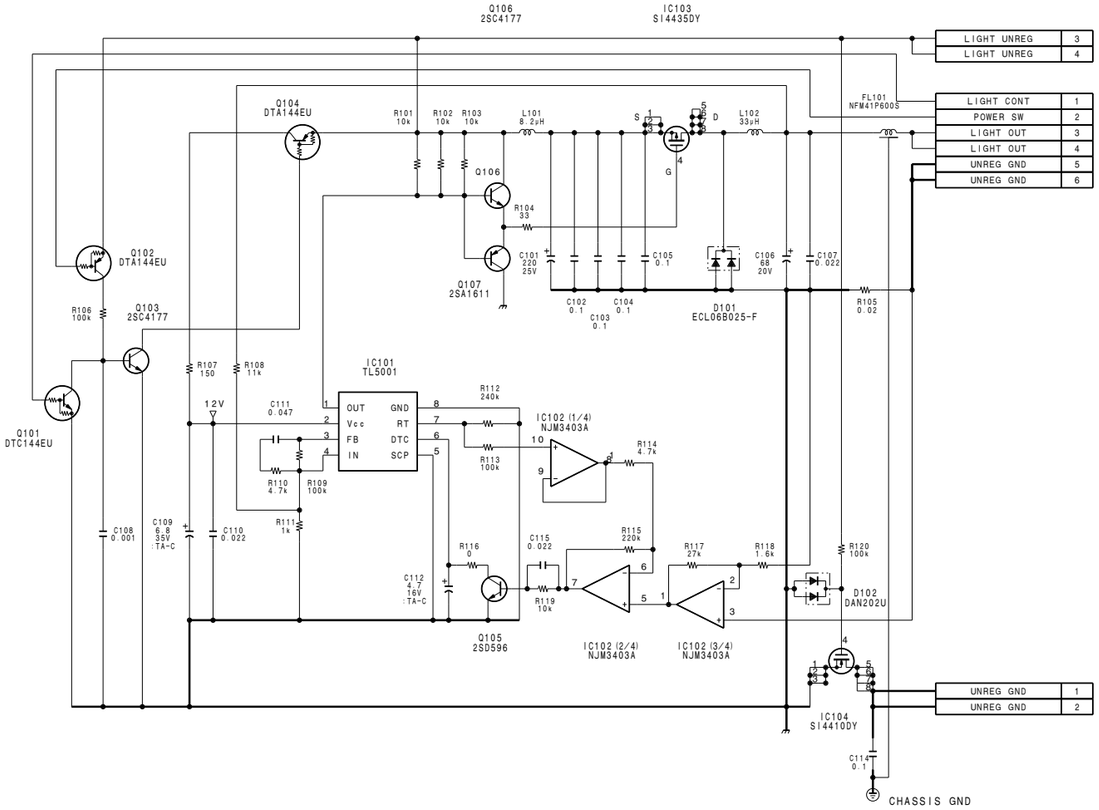

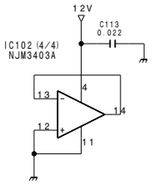

POWER SUPPLY(LIGHT)
PS-390
BOARD NO. 1-662-311-11
LOT NO. 604-
B-¥DNW7-PS390-X1

DNV-5(SY):S/N 10001 and Higher
DNV-5(J):S/N 30001 and Higher

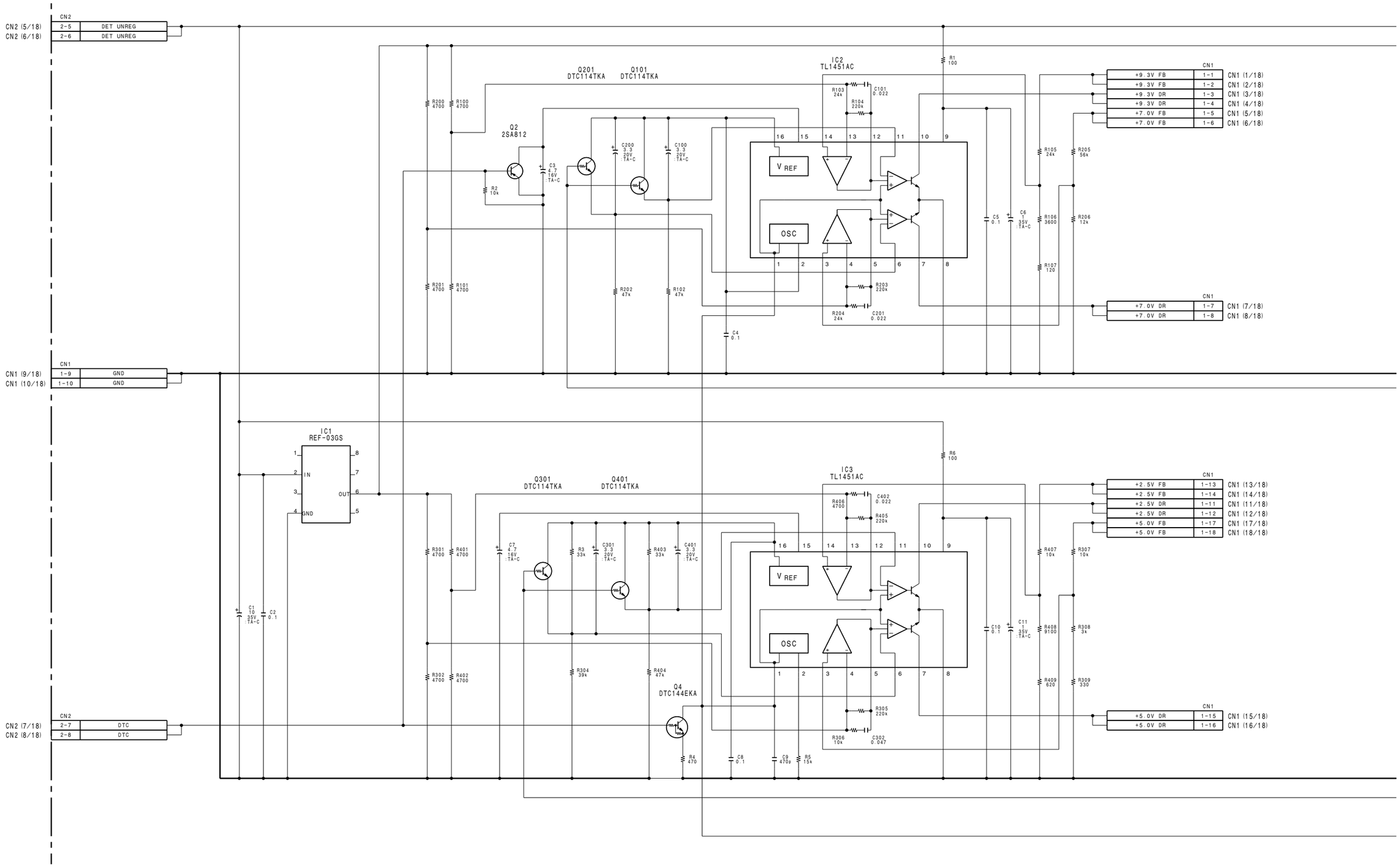

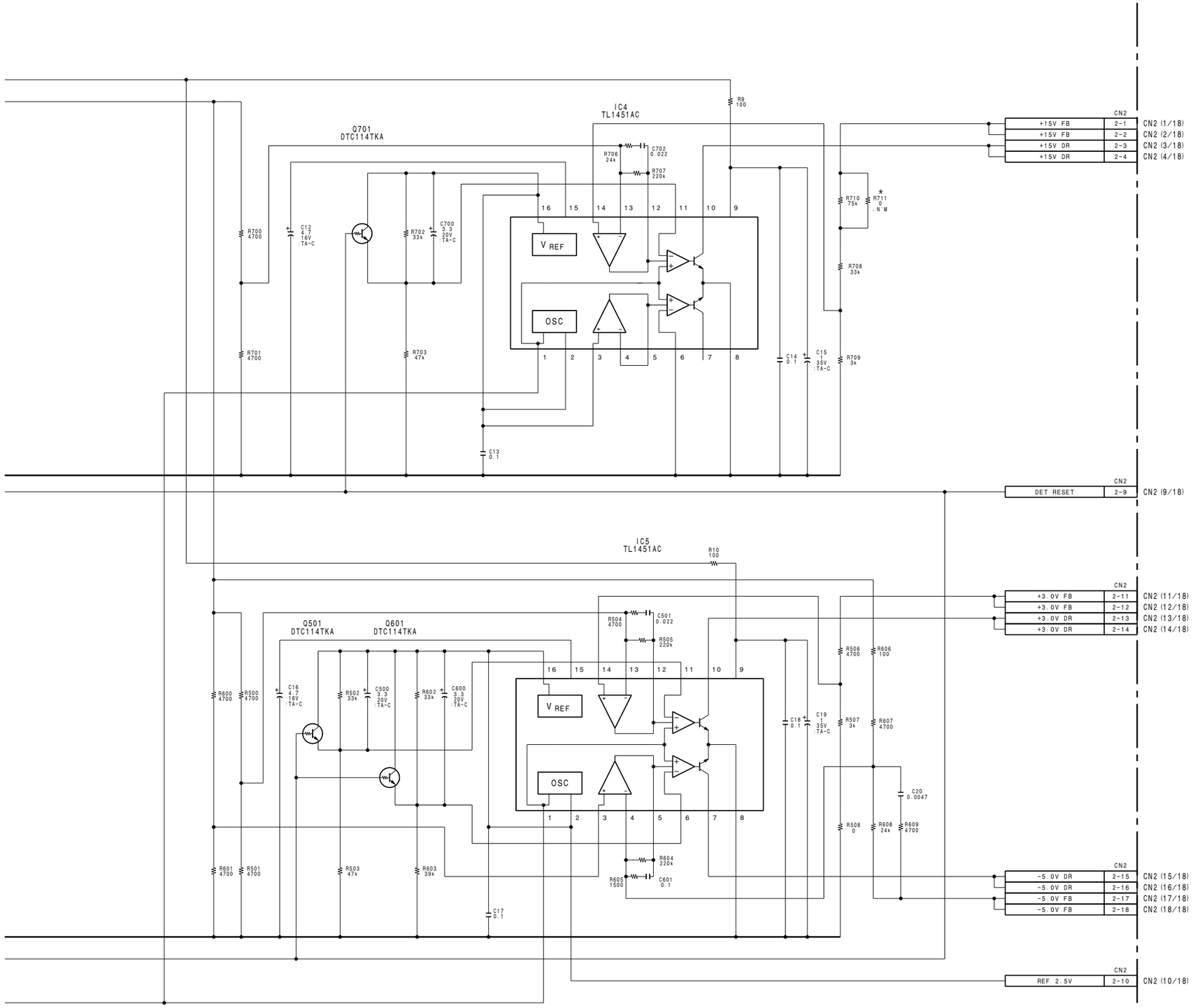

REGULATOR, SWITCHING CONTROL

RE-118

BOARD NO. 1-662-325-11
LOT NO. 605-
B-¥DNV5-RE118-X1

DNW-7/90/90WS(SY):S/N 10001 and Higher
DNW-7/90/90WS(J):S/N 30001 and Higher
DNW-7P/90P/90WSP(SY):S/N 40001 and Higher

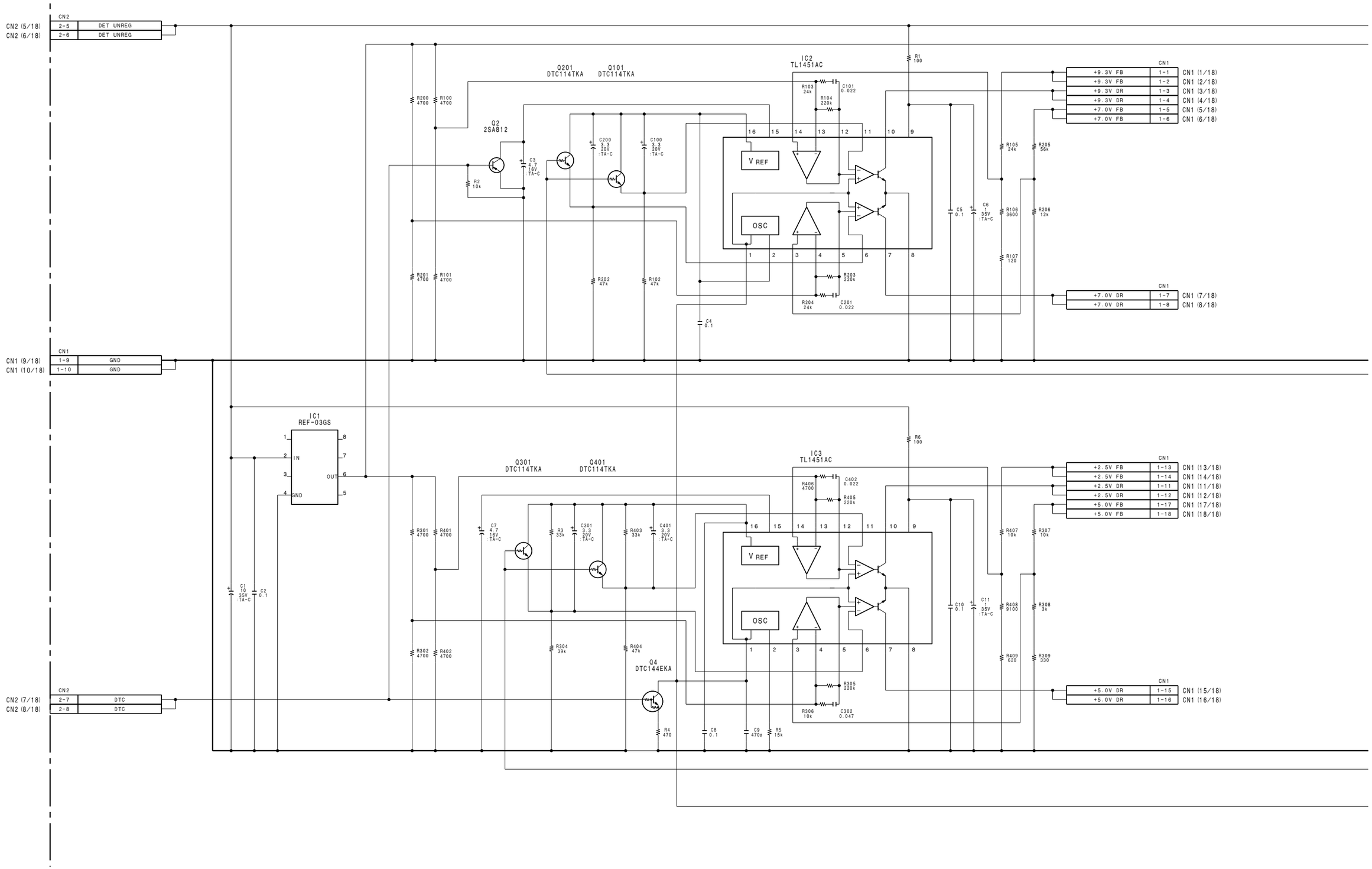

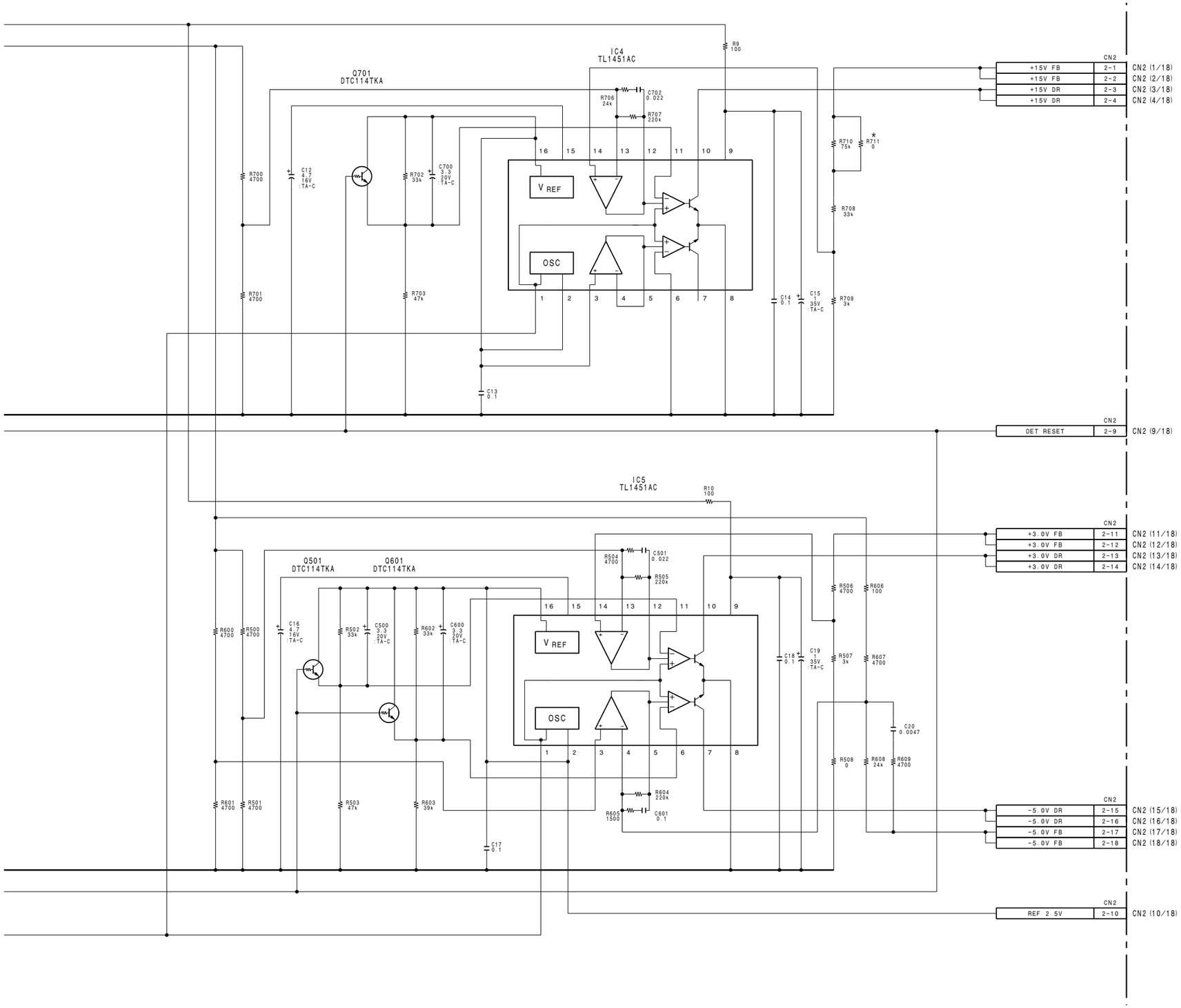

REGULATOR, SWITCHING CONTROL

RE-118

BOARD NO. 1-662-325-11
LOT NO. 604-
B-¥DNW7-RE118-X1

DNV-5(SY):S/N 10001 and Higher
DNV-5(J):S/N 30001 and Higher

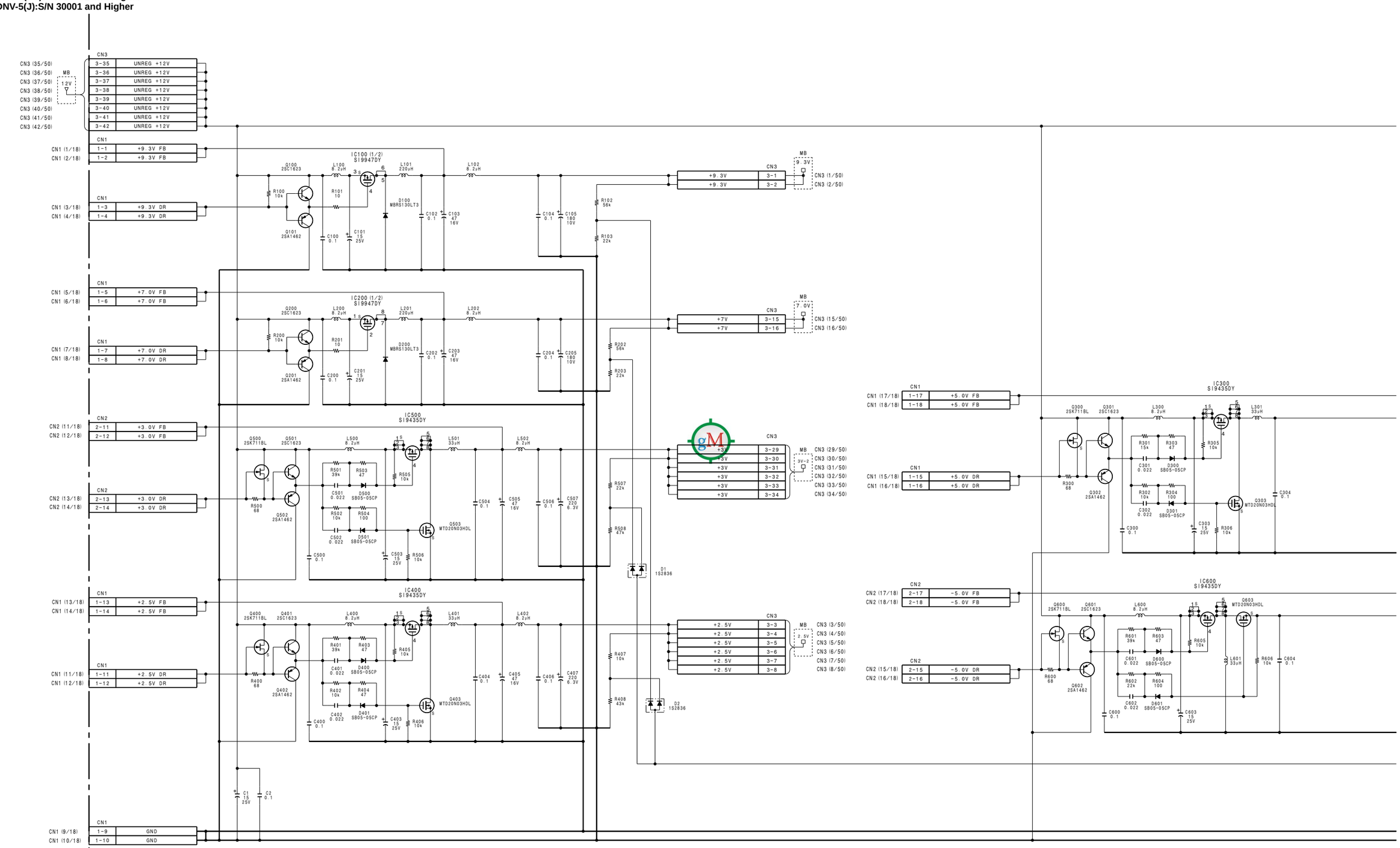

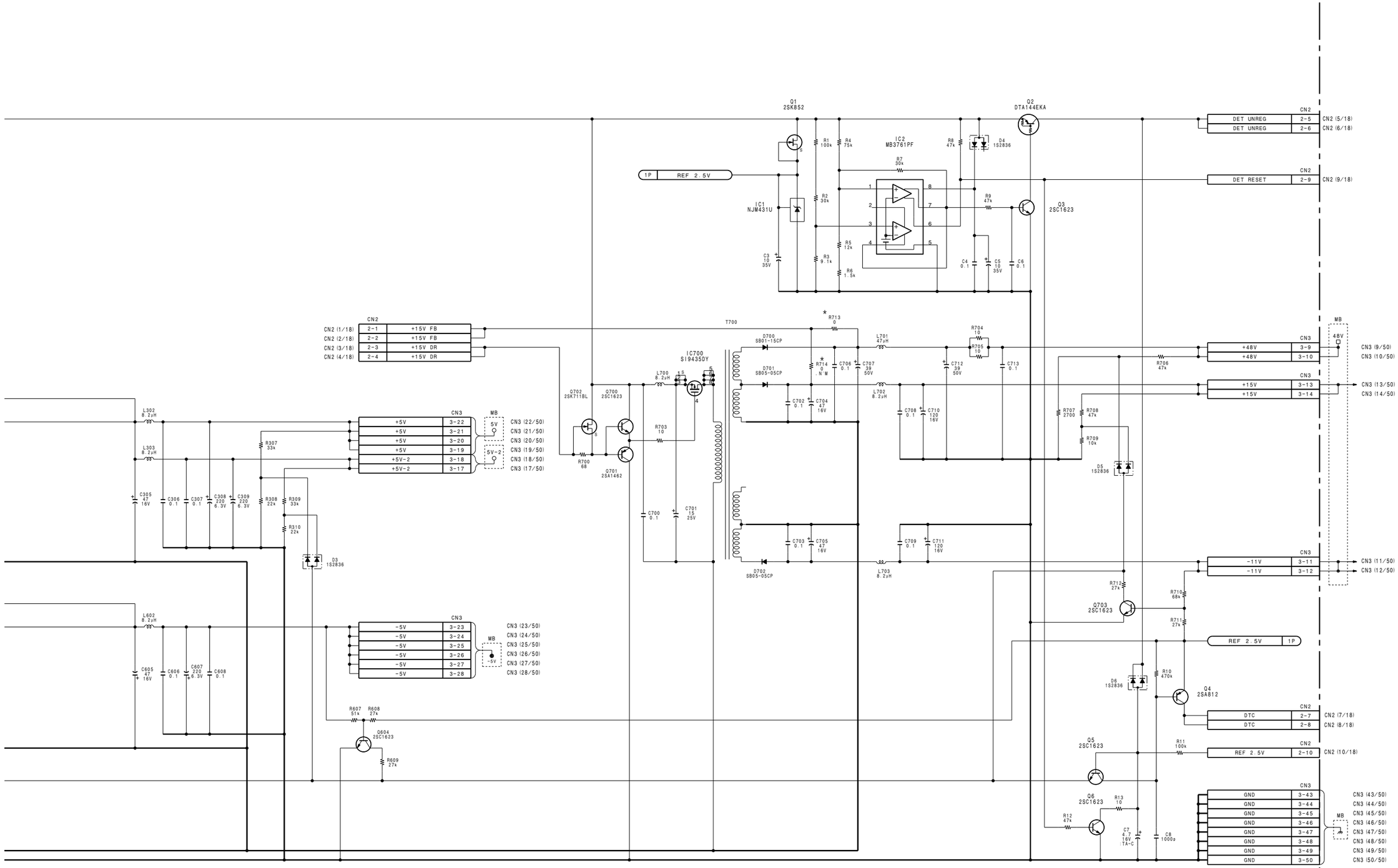

REGULATOR

RE-119

BOARD NO.1-662-326-11
LOT NO. 605-
B-¥DNV5-RE119-11

DNW-7/90/90WS(SY):S/N 10001 and Higher
DNW-7/90/90WS(J):S/N 30001 and Higher
DNW-7P/90P/90WSP(SY):S/N 40001 and Higher

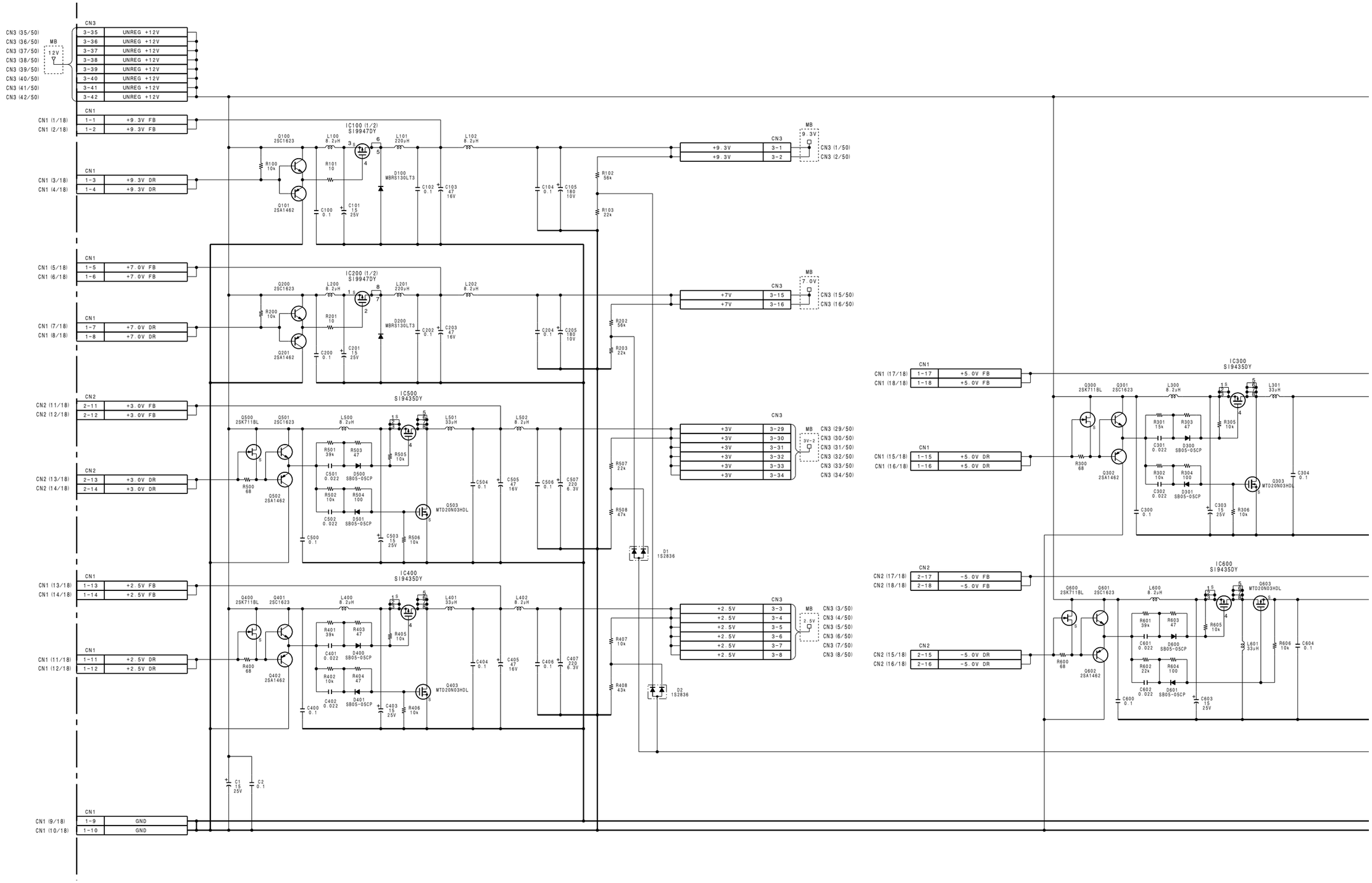

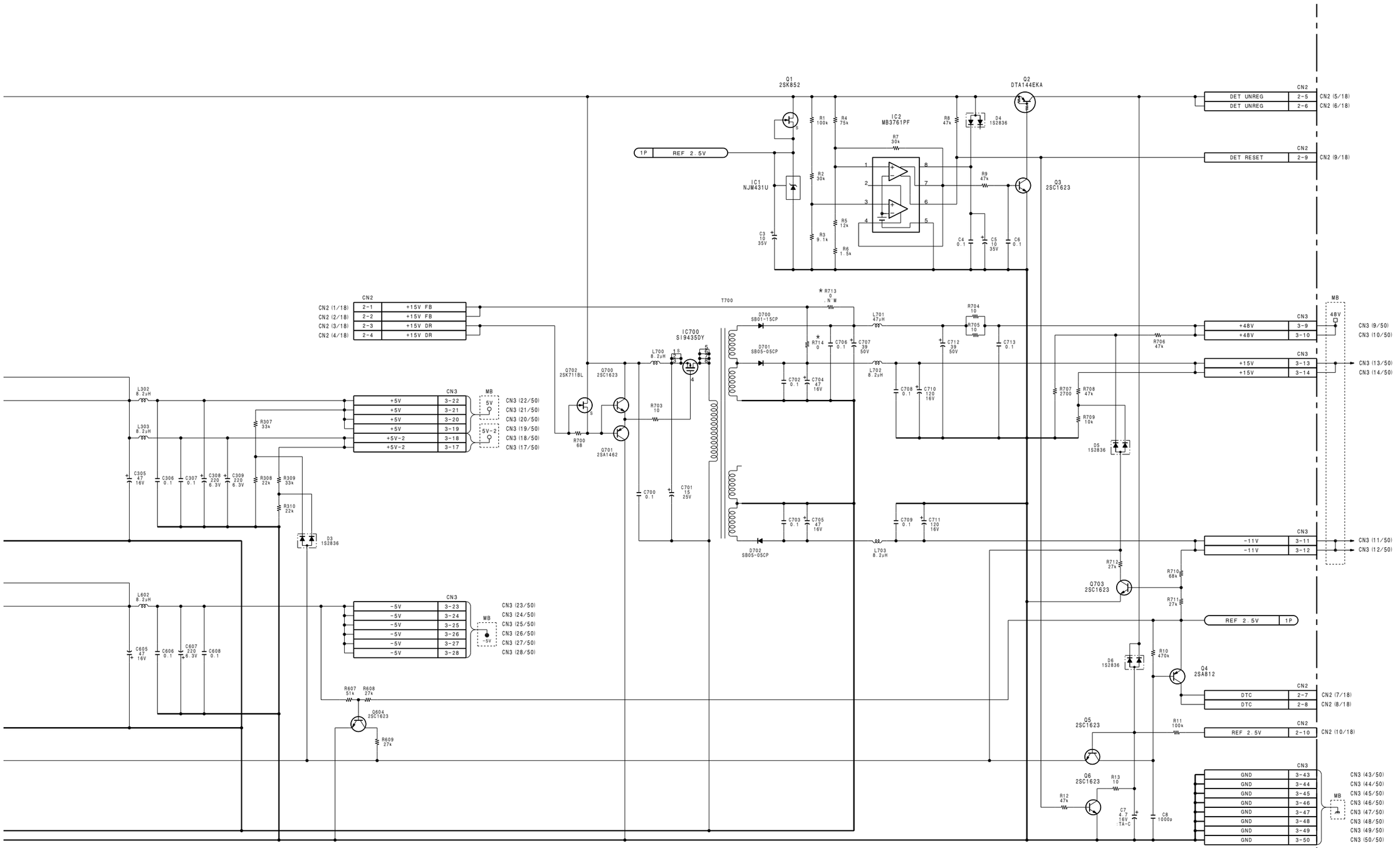

REGULATOR

RE-119

BOARD NO.1-662-326-11
LOT NO. 604-
B-¥DNW7-RE119-11

DNV-5(SY):S/N 10001 and Higher
DNV-5(J):S/N 30001 and Higher
DNW-7/90/90WS(SY):S/N 10001 and Higher
DNW-7/90/90WS(J):S/N 30001 and Higher
DNW-7P/90P/90WSP(SY):S/N 40001 and Higher

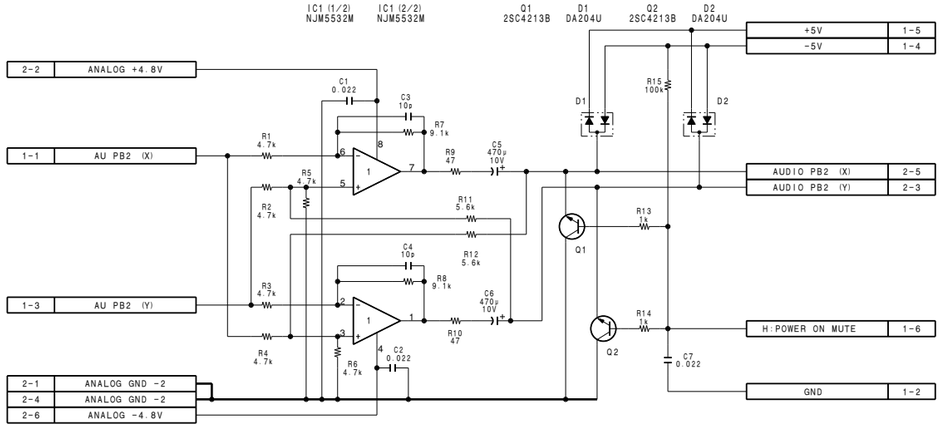

AUDIO CH-2 LINE OUT AMP
AL-40
BOARD NO. 1-662-343-11
LOT NO. 604-
B-¥DNW7-AL40-11

DNV-5(SY):S/N 10001 and Higher
DNV-5(J):S/N 30001 and Higher

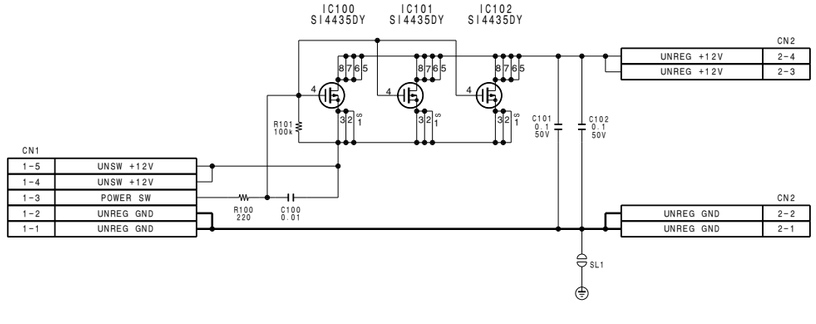

POWER SUPPLY FOR 50-PIN
CT-185
BOARD NO. 1-662-480-11
LOT NO. 605-
B-¥DNV5-CT185-11

http://getMANUAL.com

DNV-5(SY):S/N 10001 and Higher
DNV-5(J):S/N 30001 and Higher
DNW-7/90/90WS(SY):S/N 10001 and Higher
DNW-7/90/90WS(J):S/N 30001 and Higher
DNW-7P/90P/90WSP(SY):S/N 40001 and Higher

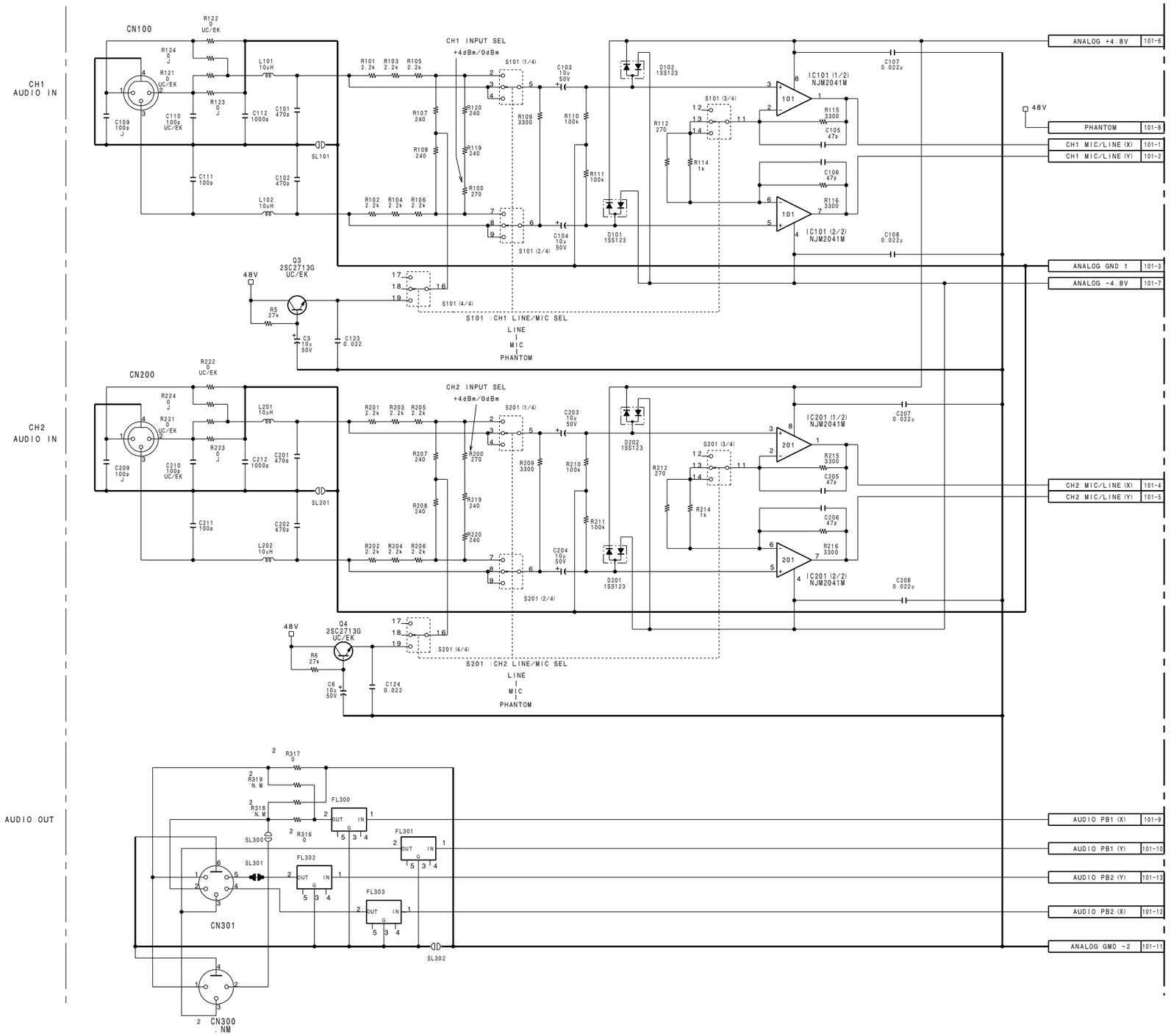

	UC/EK	J
R121	0	:N'M
R122	0	:N'M
R123	:N'M	0
R124	:N'M	0
R221	0	:N'M
R222	0	:N'M
R223	:N'M	0
R224	:N'M	0
C109	:N'M	100P
C110	100P	:N'M
C209	:N'M	100P
C210	100P	:N'M
Q3	2SC2713G	:N'M
Q4	2SC2713G	:N'M
CN100	1-573-594-11	1-573-593-11
CN200	1-573-594-11	1-573-593-11

2	UC/EK	J
CN300	1-573-594-11	1-573-593-11
R316	0	:N'M
R317	0	:N'M
R318	:N'M	0
R319	:N'M	0

CONNECTOR (AUDIO IN/OUT), AUDIO PRE-AMP

AXM-14

BOARD NO. 1-662-339-11
LOT NO. 604-

B-¥DNW7-AXM14-X1

DNV-5(SY):S/N 10001 and Higher
DNV-5(J):S/N 30001 and Higher

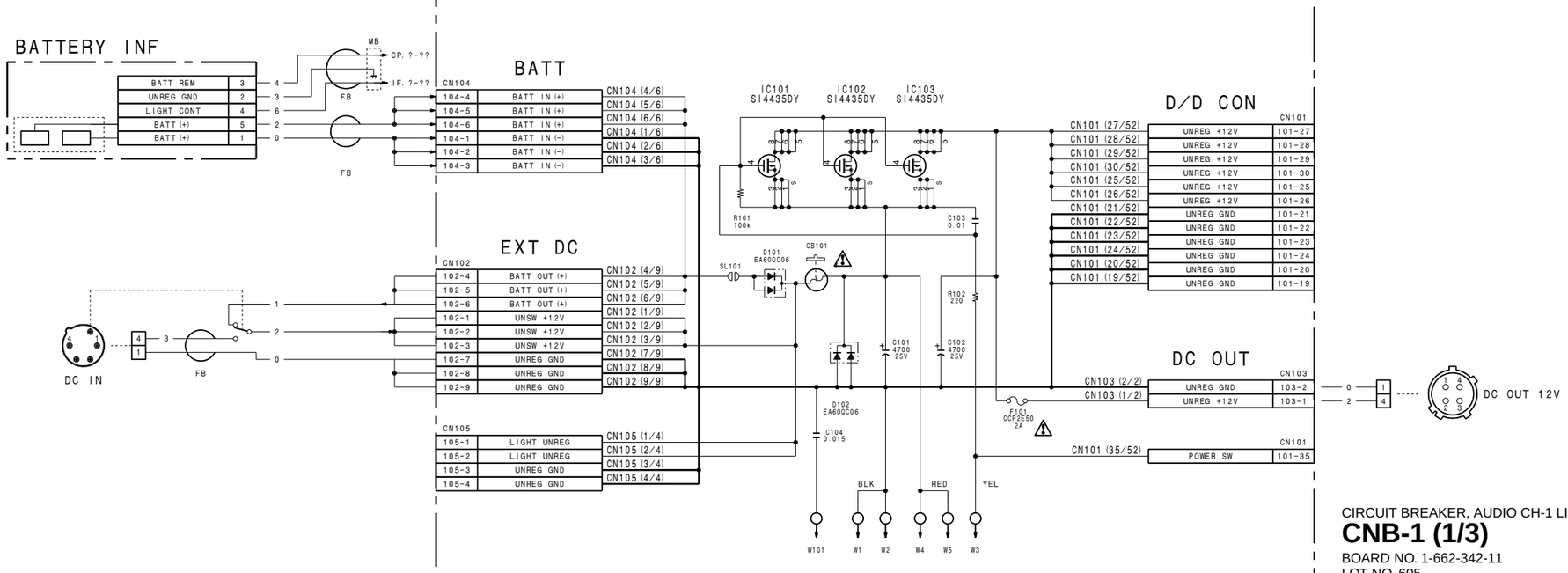

CIRCUIT BREAKER, AUDIO CH-1 LINE OUT AMP

CNB-1 (1/3)

BOARD NO. 1-662-342-11
LOT NO. 605-
B-¥DNV5-CNB-X1

DNV-5(SY):S/N 10001 and Higher
DNV-5(J):S/N 30001 and Higher

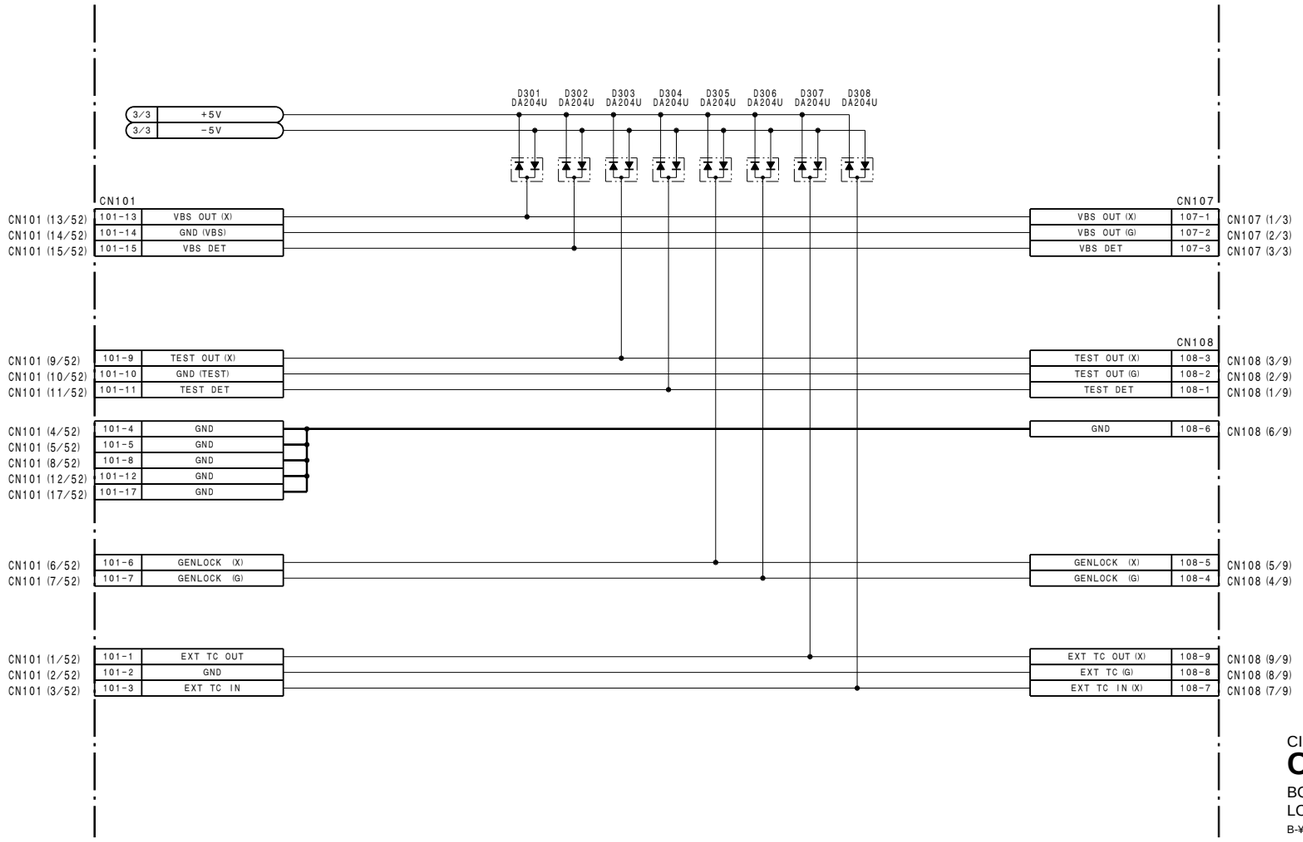

CIRCUIT BREAKER, AUDIO CH-1 LINE OUT AMP

CNB-1 (2/3)

BOARD NO. 1-662-342-11
LOT NO. 605-
B-¥DNV5-CNB1-X1

DNV-5(SY):S/N 10001 and Higher
DNV-5(J):S/N 30001 and Higher

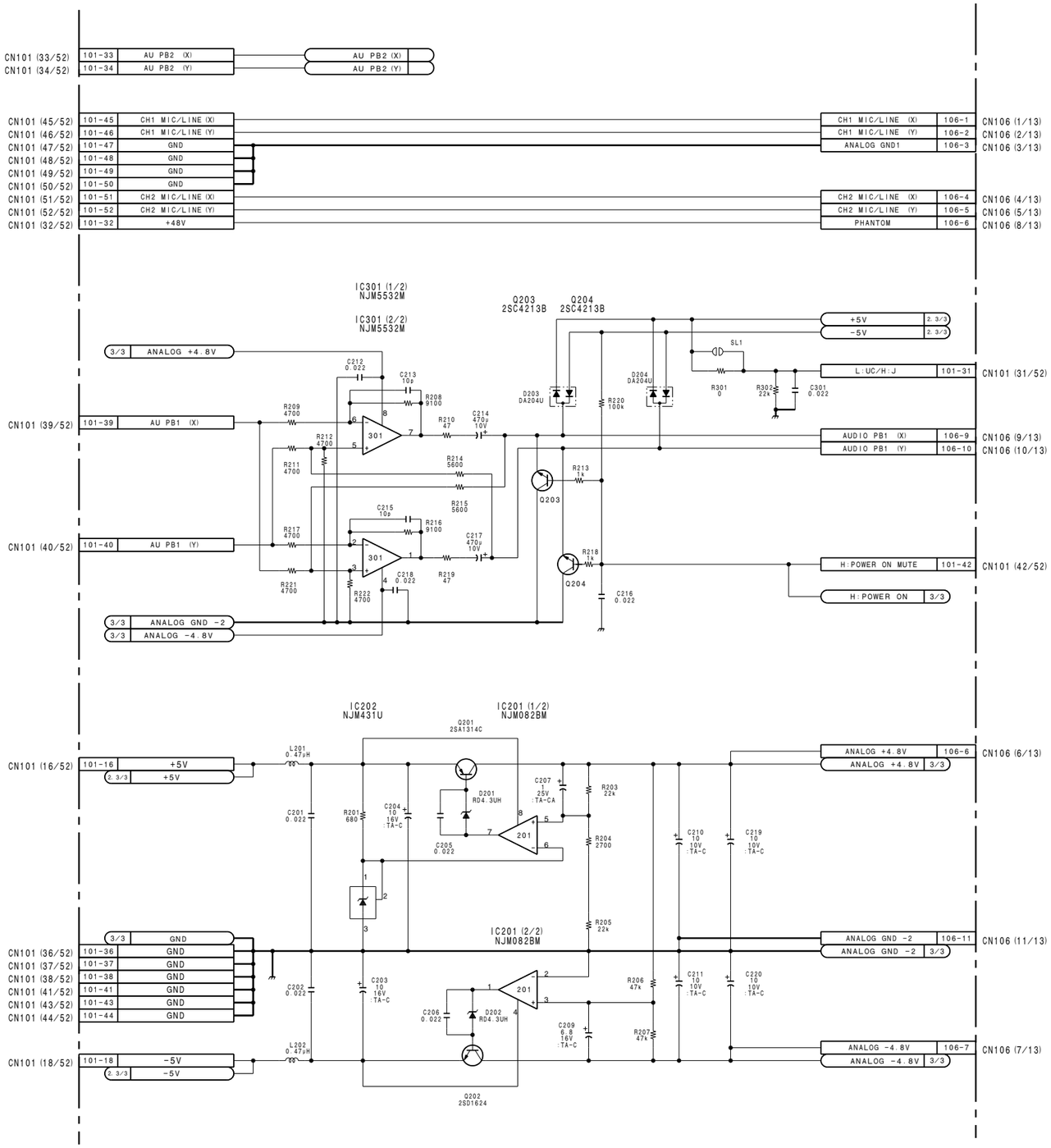

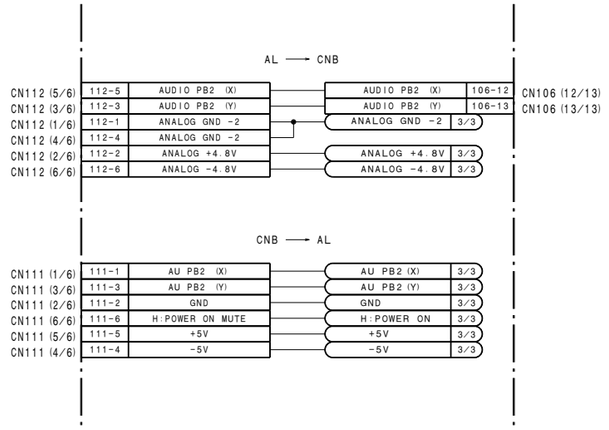

CIRCUIT BREAKER, AUDIO CH-1 LINE OUT AMP

CNB-1 (3/3)

BOARD NO. 1-662-342-11
LOT NO. 605-
B-¥DNV5-CNB1-X1

DNW-7/90/90WS(SY):S/N 10001 and Higher
DNW-7/90/90WS(J):S/N 30001 and Higher
DNW-7P/90P/90WSP(SY):S/N 40001 and Higher

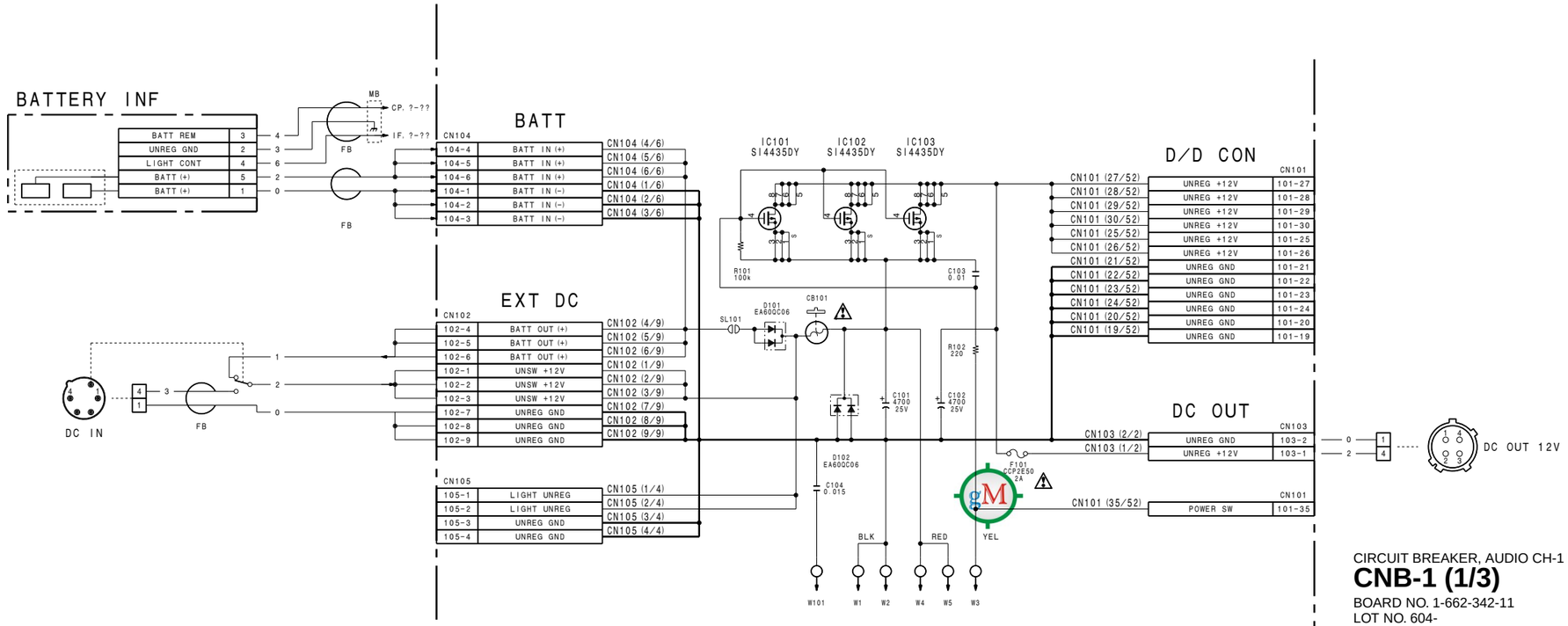

CIRCUIT BREAKER, AUDIO CH-1 LINE OUT AMP

CNB-1 (1/3)

BOARD NO. 1-662-342-11
LOT NO. 604-
B-¥DNW7-CNB1-X1

DNW-7/90/90WS(SY):S/N 10001 and Higher
DNW-7/90/90WS(J):S/N 30001 and Higher
DNW-7P/90P/90WSP(SY):S/N 40001 and Higher

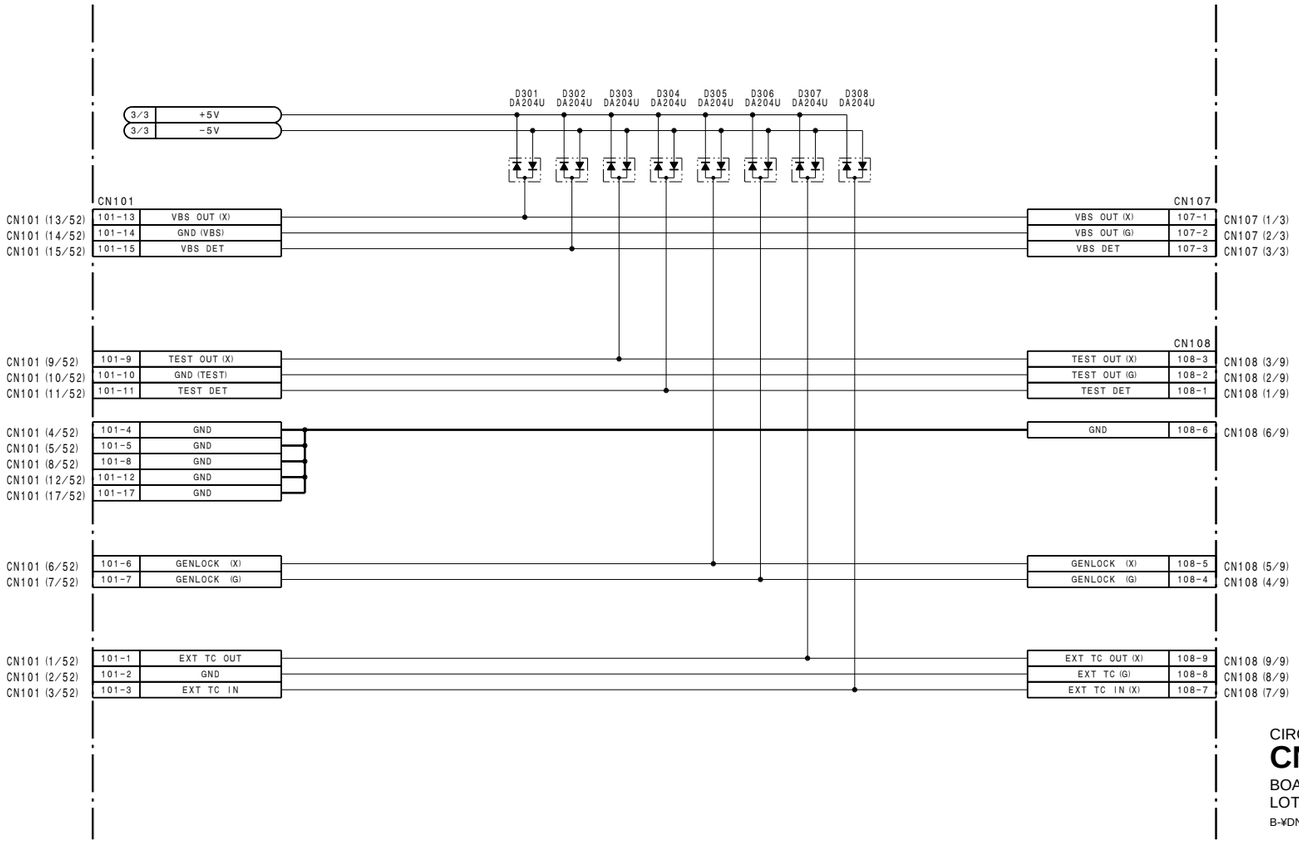

CIRCUIT BREAKER, AUDIO CH-1 LINE OUT AMP

CNB-1 (2/3)

BOARD NO. 1-662-342-11
LOT NO. 604-

B-¥DNW7-CNB1-X1

DNW-7/90/90WS(SY):S/N 10001 and Higher
DNW-7/90/90WS(J):S/N 30001 and Higher
DNW-7P/90P/90WSP(SY):S/N 40001 and Higher

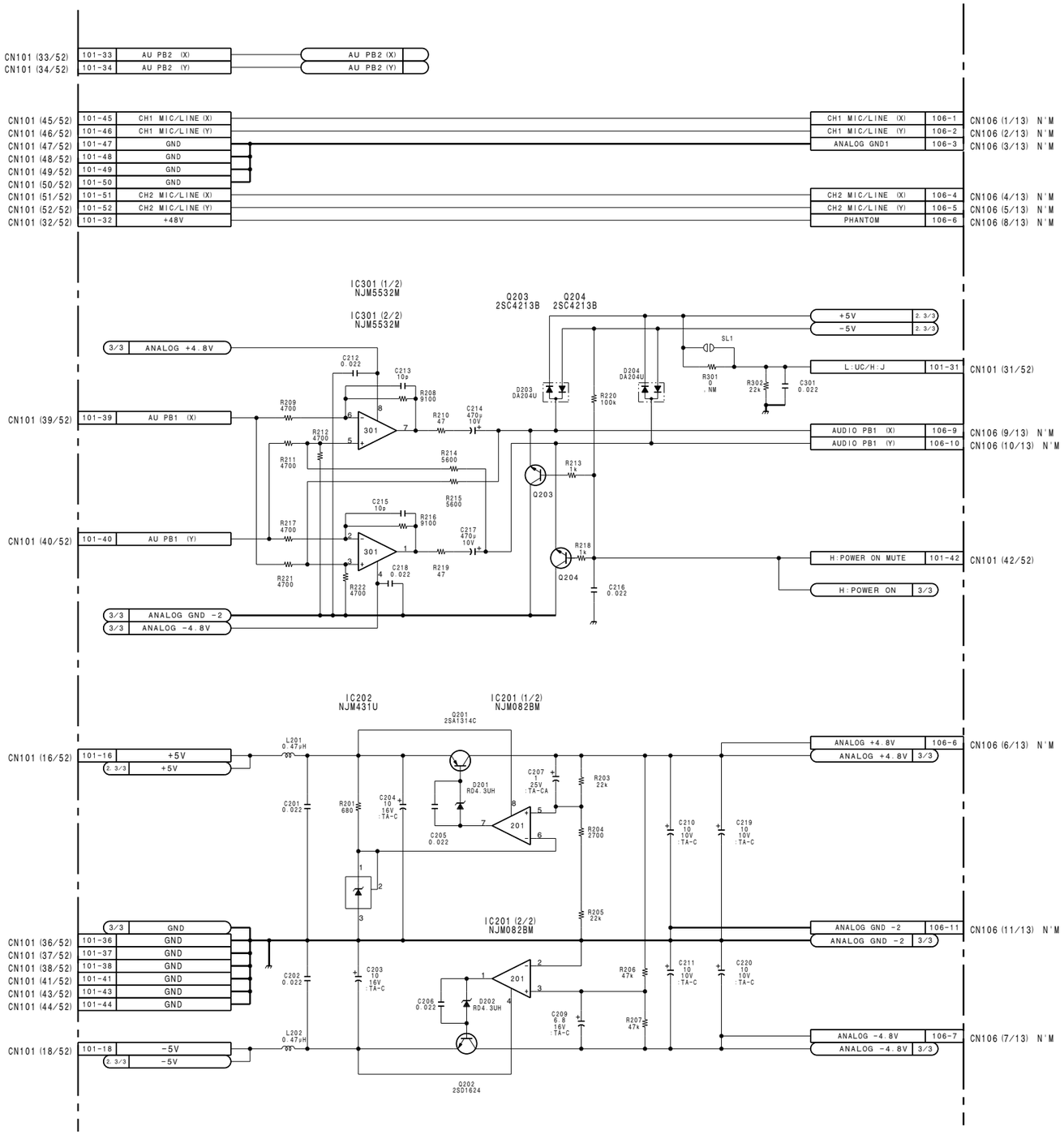

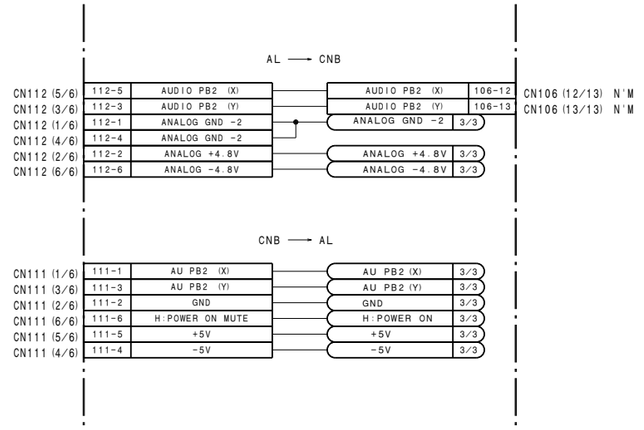

CIRCUIT BREAKER, AUDIO CH-1 LINE OUT AMP

CNB-1 (3/3)

BOARD NO. 1-662-342-11
LOT NO. 604-
B-¥DNW7-CNB1-X1

DNV-5(SY):S/N 10001 and Higher
DNV-5(J):S/N 30001 and Higher
DNW-7/90/90WS(SY):S/N 10001 and Higher
DNW-7/90/90WS(J):S/N 30001 and Higher
DNW-7P/90P/90WSP(SY):S/N 40001 and Higher

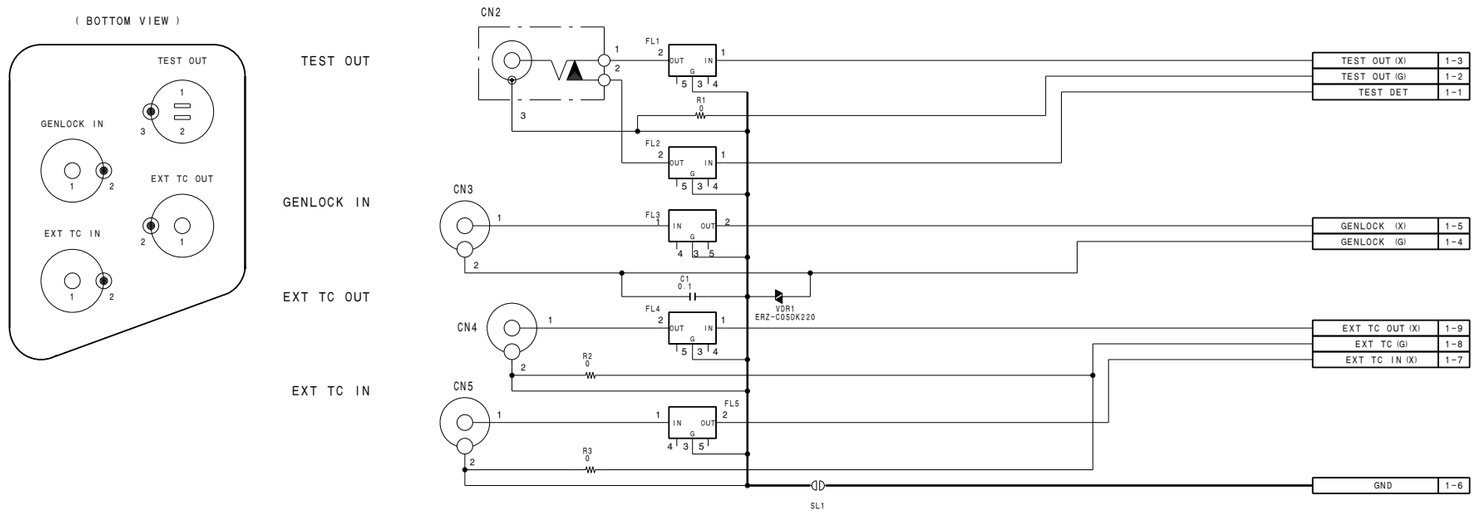

CONNECTOR (GEN LOCK IN, TEST OUT, TC IN, TC OUT)

IO-117

BOARD NO. 1-662-338-11
LOT NO. 604-
B-¥DNW7-IO117-11

DNV-5(SY):S/N 10001 and Higher
DNV-5(J):S/N 30001 and Higher
DNW-7/90/90WS(SY):S/N 10001 and Higher
DNW-7/90/90WS(J):S/N 30001 and Higher
DNW-7P/90P/90WSP(SY):S/N 40001 and Higher

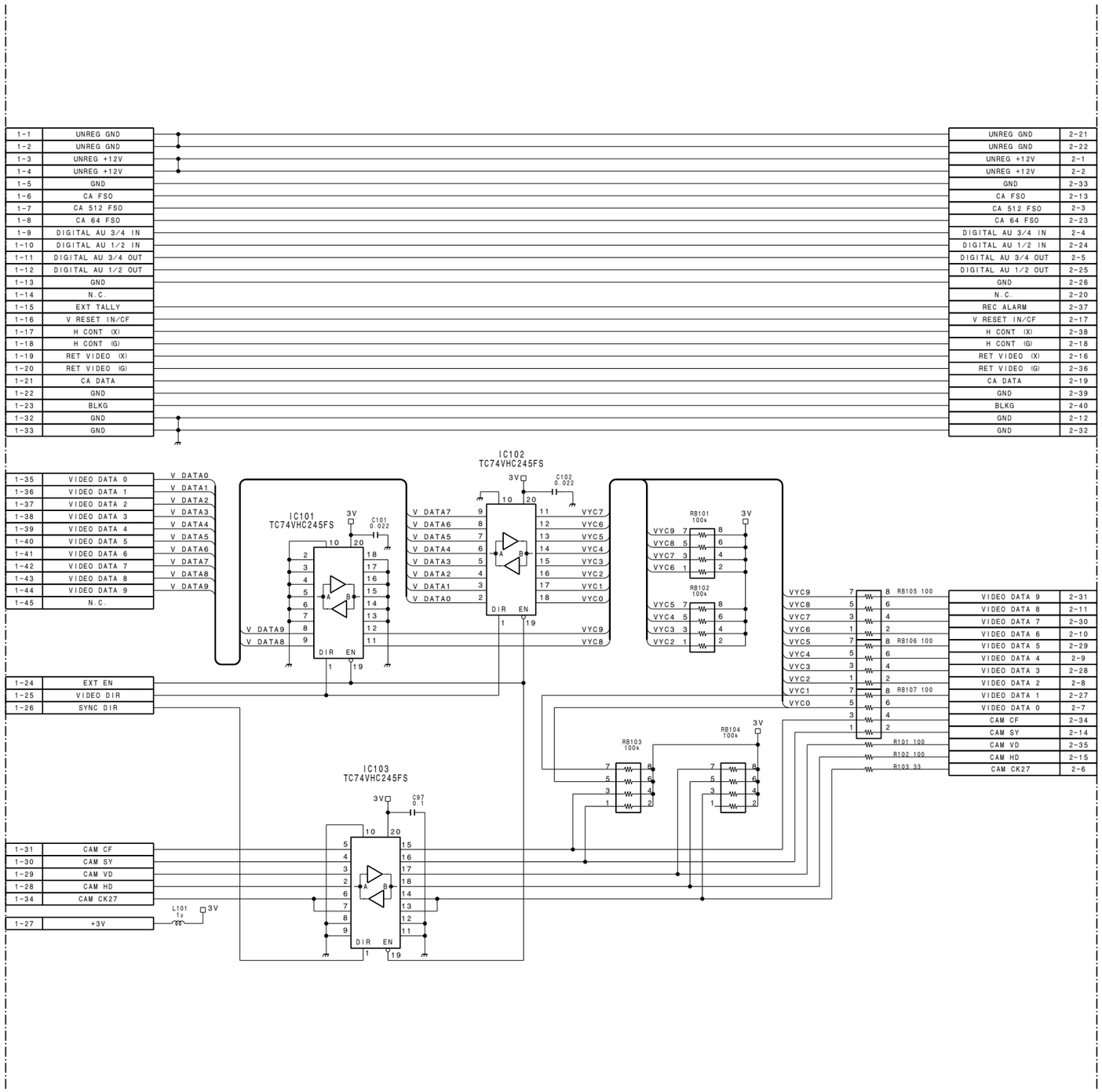

40-PIN ADAPTOR INTERFACE

CI-12

BOARD NO.1-662-327-11
LOT NO. 604-

B-¥DNW7-CI12-11

http://getMANUAL.com

DNV-5(SY):S/N 10001 and Higher
DNV-5(J):S/N 30001 and Higher
DNW-7/90/90WS(SY):S/N 10001 and Higher
DNW-7/90/90WS(J):S/N 30001 and Higher
DNW-7P/90P/90WSP(SY):S/N 40001 and Higher

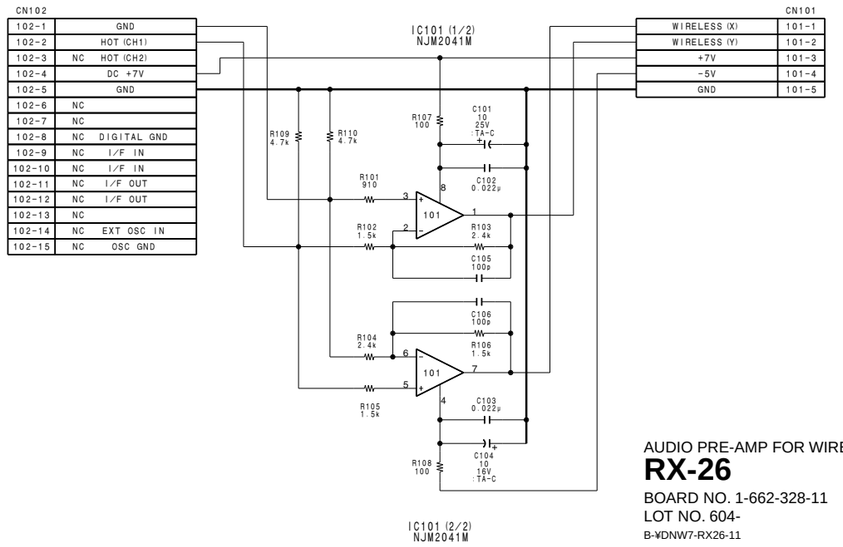

AUDIO PRE-AMP FOR WIRELESS MICROPHONE
RX-26
BOARD NO. 1-662-328-11
LOT NO. 604-
B-¥DNW7-RX26-11

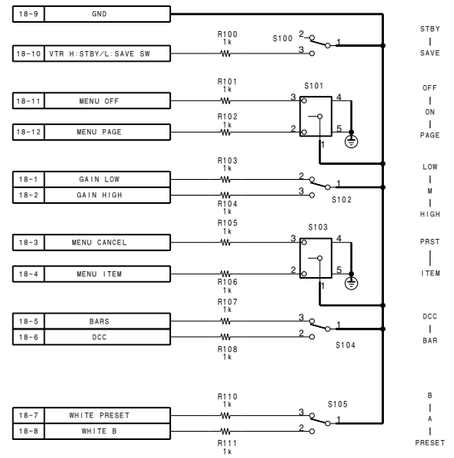

SWITCH PANEL
SW-780
BOARD NO. 1-662-346-11
LOT NO. 604-
B-¥DNW7-SW780-11

DNV-5(SY):S/N 10001 and Higher
DNV-5(J):S/N 30001 and Higher

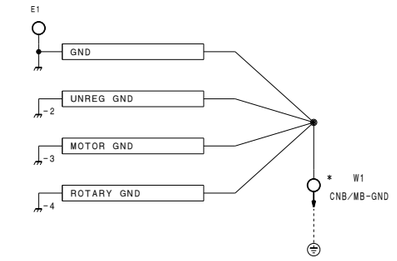

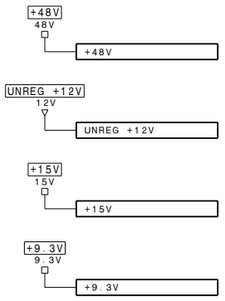

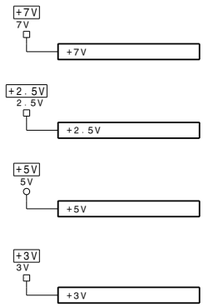

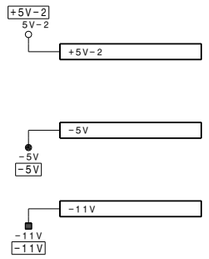

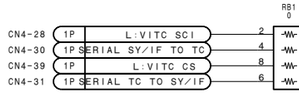

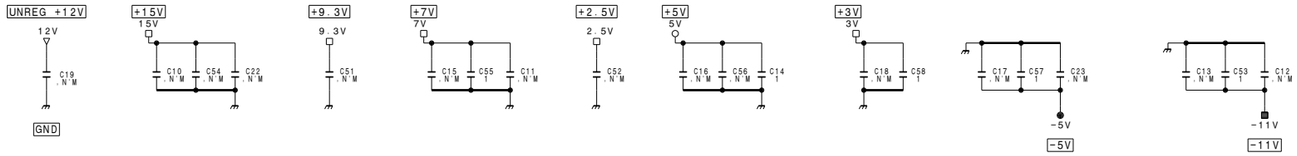

IF-634 CN1

CN1 50P

1	B-Y VIDEO	CN34-29	2	B-Y VIDEO (G)	CN34-30
3	LD (VA8) A=NC	CN34-27	4	GND	
5	MIC CONT	CN33-13 /R12	6	B BSH A=NC	CN34-26
7	MIC CONT (G)	CN33-12	8	ENCODE VIDEO (G)	CN34-24
9	LUMINANCE	CN34-21	10	LUMINANCE (G)	CN34-22
11	GND		12	GND	
13	COLOR FRAMING	CN34-17	14	B WSH A=NC	CN34-18
15	SYNC	CN34-15	16	REW CONT	CN34-16
17	H:SAVE	CN34-13	18	AU MON	CN34-14 /R11
19	AU CH-1 CONT	CN34-11	20	GND	
21	R-Y VIDEO	CN34-9	22	R-Y (GND)	CN34-10
23	R GND A=NC	CN34-7	24	B FB A=NC	CN34-8
25	BATT IND	CN34-5	26	PB/CAM	CN34-6
27	TAPE IND 2	CN34-3	28	REC/TALLY	CN34-4
29	TAPE IND 1	CN34-1	30	GND	
31	GND		32	AU LEVEL IND	CN35-20 /R10
33	GND		34	PB VIDEO	CN35-18
35	SG FLD A=NC	CN35-15	36	VD A=NC	CN35-16
37	HTSG A=NC	CN35-13	38	SERIAL CONT	CN35-14
39	VCO CONT (G) A=NC	CN35-11	40	GENLOCK IN (G)	CN35-12
41	L:50P VITC SCI	CN35-9 /RB1-1	42	SRL TC CK	CN35-10 /R17
43	SRL SY/IF TO TC	CN35-7 /CN34-25 /RB1-3	44	SRL TC TO SY/IF	CN35-8 /RB1-5
45	L:50P VITC CS	CN35-5 /RB1-7	46	ENCODE VIDEO	CN35-6 /CN34-23
47	H:+9V CAM	CN35-3	48	GENLOCK IN (X)	CN35-4
49	GND		50	GND	

IF-634 CN2

CN2 100P

1	GND		2	GND	
3	L:REC ENABLE	CN4-4	4	SCK AT-SY	CN4-3
5	REF 4	CN4-6	6	CAM SYNC DET	CN4-5
7	ROTARY PUSH A=NC	CN25-12	8	L:TC V RST	CN22-6
9	ROTARY A A=NC	CN25-10	10	ROTARY B A=NC	CN25-9
11	ROTARY PUSH SW	CN33-5	12	ROTARY A SW	CN33-4
13	ROTARY B SW	CN33-3	14	VTR S/S SW	CN33-6
15	LENS TX	CN33-11	16	LENS RX	CN33-10
17	+9.3V		18	+9.3V	
19	UNREG +12V		20	UNREG +12V	
21	H:BATT ALARM	CN4-22	22	H:CA ENABLE	CN4-21
23	L:UC/H:J	CN20-31	24	H:VTR SAVE LAMP	CN4-23
25	EXT TALLY	CN53-31	26	BACK TALLY	CN51-2 /L1
27	GND		28	GND	
29	GND		30	GND	
31	BATT REM	CN50-1	32	V RESET IN/CF	CN53-30
33	CHAR (VTR)	CN22-29	34	CHAR BLK (VTR)	CN22-28
35	TEST DET	CN20-11	36	VBS DET	CN20-15
37	H CONT (X)	CN53-29	38	H CONT (G)	CN53-28
39	RET VIDEO (X)	CN53-27	40	RET VIDEO (G)	CN53-26
41	GENLOCK (X)	CN20-6	42	GENLOCK (G)	CN20-7
43	GND (TEST GND)		44	TEST OUT (X)	CN20-9
45	GND (VBS GND)		46	VBS OUT (X)	CN20-13
47	RM TEST (X)	CN31-4	48	-5V	
49	-5V		50	-5V	
51	+7V		52	+7V	
53	+5V		54	+5V	
55	+5V		56	VTR SAVE	CN4-1
57	SCI SY TO AT	CN4-26	58	SCI AT TO SY	CN4-25
59	CK27	R19	60	H:NT/L:PAL	CN3-35 /CN22-1
61	SCL (MC)	CN22-3	62	SDA (MC) I/O	CN22-4
63	VF AU	CN22-9/R10	64	SD I/O (RM)	CN31-2
65	SD (RM)	CN31-1	66	CA DATA	CN53-25
67	GND		68	GND	
69	VTR EN	CN4-69	70	+3V	
71	+3V		72	+3V	
73	+3V		74	+3V	
75	GND		76	GND	
77	GND		78	GND	
79	GND		80	BLKG	CN53-23
81	EXT EN	CN53-22	82	VIDEO DIR	CN53-21
83	SYNC DIR	CN53-20	84	CAM CK27	R16/R18
85	CAM HD	CN4-86 /CN53-18	86	CAM VD	CN4-85 /CN53-17
87	CAM SY	CN22-18 /CN4-88 /CN53-16	88	CAM CF	CN22-17 /CN4-87 /CN53-15
89	VIDEO DATA 0	CN4-90 /CN53-11	90	VIDEO DATA 1	CN4-89 /CN53-10
91	VIDEO DATA 2	CN4-92 /CN53-9	92	VIDEO DATA 3	CN4-91 /CN53-8
93	VIDEO DATA 4	CN4-94 /CN53-7	94	VIDEO DATA 5	CN4-93 /CN53-6
95	VIDEO DATA 6	CN4-96 /CN53-5	96	VIDEO DATA 7	CN4-95 /CN53-4
97	VIDEO DATA 8	CN4-98 /CN53-3	98	VIDEO DATA 9	CN4-97 /CN53-2
99	GND		100	GND	

R17 0
R18 0
R19 .N/M

KY-293 CN30

CN30 10P

1	+5V	
2	GND	
3	L:PLAY KEY	CN4-47
4	L:REW KEY	CN4-46
5	L:EJECT KEY	CN4-45
6	L:FF KEY	CN4-44
7	L:STOP KEY	CN4-43
8	L:FF LAMP	CN4-42
9	L:REW LAMP	CN4-41
10	L:PLAY LAMP	CN4-40

REMOTE CN31

CN31 6P

1	SD (RM)	CN2-65
2	SD I/O (RM)	CN2-64
3	UNREG GND	
4	RM TEST (X)	CN2-47
5	GND	
6	UNREG +12V	

PS-390 (AGL GRAY) CN32

CN32 2P

1	POWER SW	CN20-35 /CN25-11 /CN27-1
2	LIGHT CONT (PS)	R14 /R15

50PIN CONNECTOR CN34

CN34 30P

30	B-Y VIDEO (G)	CN1-2	29	B-Y VIDEO	CN1-1
28	GND		27	LD (VA8) A=NC	CN1-3
26	B BSH A=NC	CN1-6	25	SRL SY/IF TO TC	CN1-43 /CN35-7 /RB1-3
24	ENCODE VIDEO (G)	CN1-8	23	ENCODE VIDEO	CN1-46 /CN35-6
22	LUMINANCE (G)	CN1-10	21	LUMINANCE	CN1-9
20	GND		19	GND	
18	B WSH A=NC	CN1-14	17	COLOR FRAMING	CN1-13
16	REW CONT	CN1-16	15	SYNC	CN1-15
14	AU MON	CN1-18 /R11	13	H:SAVE	CN1-17
12	GND		11	AU CH-1 CONT	CN1-19
10	R-Y (GND)	CN1-22	9	R-Y VIDEO	CN1-21
8	B FB A=NC	CN1-24	7	R GND A=NC	CN1-23
6	PB/CAM	CN1-26	5	BATT IND	CN1-25
4	REC/TALLY	CN1-28	3	TAPE IND 2	CN1-27
2	GND		1	TAPE IND 1	CN1-29

50PIN CONNECTOR CN35

CN35 20P

19	GND		20	AU LEVEL IND	CN1-32 /R10
17	GND		18	PB VIDEO	CN1-34
15	SG FLD A=NC	CN1-35	16	VD A=NC	CN1-36
13	HTSG A=NC	CN1-37	14	SERIAL CONT	CN1-38
11	VCO CONT (G) A=NC	CN1-39	12	GENLOCK IN (G)	CN1-40
9	L:50P VITC SCI	CN1-41 /RB1-1	10	SRL TC CK	CN1-42 /R17
7	SRL SY/IF TO TC	CN1-43 /CN34-25 /RB1-3	8	SRL TC TO SY/IF	CN1-44 /RB1-5
5	L:50P VITC CS	CN1-45 /RB1-7	6	ENCODE VIDEO	CN1-46 /CN34-23
3	H:+9V CAM	CN1-47	4	GENLOCK IN (X)	CN1-48
1	GND	CN1-49	2	GND	CN1-50

DVP-1 CN3

CN3 50P

1	VTR S/S SW	CN33-7	2	L:LIGHT ON	CN27-3 /R14
3	L:RETURN CONT	CN33-2	4	REC A ENABLE	CN5-59
5	MDC/DVP	CN5-61	6	SERIAL SV CK	CN5-62
7	SERIAL SV TO SY	CN5-63	8	SERIAL SY TO SV	CN5-64
9	L:SV READY	CN5-65	10	L:SERVO CS	CN5-66
11	PB SEL D	CN5-43	12	PB SEL C	CN5-44
13	PB SEL B	CN5-45	14	PB SEL A	CN5-46
15	SST VD	CN5-49	16	CAP SPEED	CN5-48
17	REF VD	CN5-52	18	SST CF	CN5-50
19	MDC/DVP1	CN5-51	20	MDC/DVP0	CN5-60
21	FAN DRIVE	R5	22	SV BNK3	CN5-42
23	SV BNK2	CN5-41	24	SV BNK1	CN5-40
25	SV BNK0	CN5-39	26	EDIT AUDIO ID1	CN5-37
27	EDIT AUDIO ID0	CN5-38	28	NT PULS	CN5-35
29	EDIT AUDIO ID2	CN5-36	30	OUT BUSY	CN5-33
31	READ START	CN5-34	32	TRACK START	CN5-31
33	GOP START	CN5-32	34	PB ACH ENV	CN5-23
35	H:NT/L:PAL	CN2-60 /CN22-1	36		
37	REC A PB	CN5-80	38	REC A PB ENV	CN5-79
39	GND		40	GND	
41	GND		42	GND	
43	RF A (Y)	CN5-70	44	RF A (X)	CN5-69
45	RF B (Y)	CN5-74	46	RF B (X)	CN5-73
47	RF C (Y)	CN5-72	48	RF C (X)	CN5-71
49	RF D (Y)	CN5-76	50	RF D (X)	CN5-75

DVP-1 CN4

CN4 100P

1	VTR SAVE	CN2-56	2	SV REF FRAME	CN5-24
3	SCK AT-SY	CN2-4	4	L:REC ENABLE	CN2-3
5	CAM SYNC DET	CN2-6	6	REF 4	CN2-5
7	GATED PB CTL	CN5-18 /CN22-21	8	RF ALARM WINDOW	CN5-47
9	REC AUDIO ID0	CN5-30	10	REC AUDIO ID1	CN5-29
11	REC AUDIO ID2	CN5-28	12	SV VD	CN5-27
13	SV CF	CN5-26	14	SV 1/2 GOP	CN5-25
15	TAPE DIRECTION	CN5-19 /CN22-22	16	1/2 VD EQV	CN5-17 /CN22-20
17	+9.3V		18		
19	UNREG +12V		20	UNREG +12V	
21	H:CA ENABLE	CN2-22	22	H:BATT ALARM	CN2-21
23	H:VTR SAVE LAMP	CN2-24	24		
25	SCI AT TO SY	CN2-58	26	SCI SY TO AT	CN2-57
27	L:V RESET	CN22-16 /CN5-15	28	L:VITC SCI	CN22-15 /RB1-2
29	SERIAL TC CK	CN22-14 /R17	30	SERIAL SY/IF TO TC	CN22-13 /RB1-4
31	SERIAL TC TO SY/IF	CN22-12 /RB1-6	32	L:TC CS	CN22-11
33	+2.5V		34	+2.5V	
35	+2.5V		36	+2.5V	
37	L:TC READY	CN22-10	38		
39	L:VITC CS	CN22-8 /RB1-8	40	L:PLAY LAMP	CN30-10
41	L:REW LAMP	CN30-9	42	L:FF LAMP	CN30-8
43	L:STOP KEY	CN30-7	44	L:FF KEY	CN30-6
45	L:EJECT KEY	CN30-5	46	L:REW KEY	CN30-4
47	L:PLAY KEY	CN30-3	48	-5V	
49	-5V		50	-5V	
51	+7V		52	+7V	
53	+5V		54	+5V	
55	+5V		56	GND	
57	GND		58	GND	
59	GND		60	GND	
61	GND		62	AU A/D DATA 3/4	CN23-24
63	AU D/A DATA 1/2	CN23-23	64	AU A/D DATA 1/2	CN23-25
65	AU FS	CN23-21	66	AU 256 FS	CN23-22
67	BATT ID DATA	CN22-30 /L2	68	AU 64 FS	CN23-20
69	VTR EN	CN2-69	70	+3V	
71	+3V		72	+3V	
73	+3V		74	+3V	
75	CA FSO	CN53-40	76	CA 512 FSO	CN53-39
77	CA 64 FSO	CN53-38	78	DIGITAL AU 3/4 IN	CN53-37
79	DIGITAL AU 1/2 IN	CN53-36	80	DIGITAL AU 3/4 OUT	CN53-35
81	GND		82	DIGITAL AU 1/2 OUT	CN53-34
83	VTR CK27	R18/R19	84	GND	
85	CAM VD	CN2-86 /CN53-17	86	CAM HD	CN2-85 /CN53-18
87	CAM CF	CN2-88 /CN22-17 /CN53-15	88	CAM SY	CN2-87 /CN22-18 /CN53-16
89	VIDEO DATA 1	CN2-90 /CN53-10	90	VIDEO DATA 0	CN2-89 /CN53-11
91	VIDEO DATA 3	CN2-92 /CN53-8	92	VIDEO DATA 2	CN2-91 /CN53-9
93	VIDEO DATA 5	CN2-94 /CN53-6	94	VIDEO DATA 4	CN2-93 /CN53-7
95	VIDEO DATA 7	CN2-96 /CN53-4	96	VIDEO DATA 6	CN2-95 /CN53-5
97	VIDEO DATA 9	CN2-98 /CN53-2	98	VIDEO DATA 8	CN2-97 /CN53-3
99	GND		100	GND	

MDC-5 CN5

CN5 80P

79	REC A PB ENV	CN3-38	80	REC A PB	CN3-37
77	GND		78		
75	RF D (X)	CN3-50	76	RF D (Y)	CN3-49
73	RF B (X)	CN3-46	74	RF B (Y)	CN3-45
71	RF C (X)	CN3-48	72	RF C (Y)	CN3-47
69	RF A (X)	CN3-44	70	RF A (Y)	CN3-43
67	GND		68		
65	L:SV READY	CN3-9	66	L:SERVO CS	CN3-10
63	SERIAL SV TO SY	CN3-7	64	SERIAL SY TO SV	CN3-8
61	MDC/DVP	CN3-5	62	SERIAL SV CK	CN3-6
59	REC A ENABLE	CN3-4	60	MDC/DVP0	CN3-20
57	+5V		58	+3V	
55	+5V		56	+5V	
53	-5V		54	-5V	
51	MDC/DVP1	CN3-19	52	REF VD	CN3-17
49	SST VD	CN3-15	50	SST CF	CN3-18
47	RF ALARM WINDOW	CN4-8	48	CAP SPEED	CN3-16
45	PB SEL B	CN3-13	46	PB SEL A	CN3-14
43	PB SEL D	CN3-11	44	PB SEL C	CN3-12
41	SV BNK2	CN3-23	42	SV BNK3	CN3-22
39	SV BNK0	CN3-25	40	SV BNK1	CN3-24
37	EDIT AUDIO ID1	CN3-26	38	EDIT AUDIO ID0	CN3-27
35	NT PULS	CN3-28	36	EDIT AUDIO ID2	CN3-29
33	OUT BUSY	CN3-30	34	READ START	CN3-31
31	TRACK START	CN3-32	32	GOP START	CN3-33
29	REC AUDIO ID1	CN4-10	30	REC AUDIO ID0	CN4-9
27	SV VD	CN4-12	28	REC AUDIO ID2	CN4-11
25	SV 1/2 GOP	CN4-14	26	SV CF	CN4-13
23	PB ACH ENV	CN3-34	24	SV REF FRAME	CN4-2
21			22	PB TC	CN22-24
19	TAPE DIRECTION	CN4-15 /CN22-22	20	REC TC	CN22-23
17	1/2 VD EQV	CN4-16 /CN22-20	18	GATED PB CTL	CN22-21 /CN4-7
15	L:V RESET	CN4-27 /CN22-16	16	REGEN INT	CN22-19
13	GND		14	GND	
11	GND		12	GND	
9	GND		10	GND	
7	UNREG +12V		8	UNREG +12V	
5	UNREG +12V		6	UNREG +12V	
3	MOTOR GND		4	MOTOR GND	
1	MOTOR GND		2	MOTOR GND	

RE-119 CN6

CN6 50P

50	UNREG GND		49	UNREG GND	
48	UNREG GND		47	UNREG GND	
46	UNREG GND		45	UNREG GND	
44	UNREG GND		43	UNREG GND	
42	UNREG +12V		41	UNREG +12V	
40	UNREG +12V		39	UNREG +12V	
38	UNREG +12V		37	UNREG +12V	
36	UNREG +12V		35	UNREG +12V	
34	+3V		33	+3V	
32	+3V		31	+3V	
30	+3V		29	+3V	
28	-5V		27	-5V	
26	-5V		25	-5V	
24	-5V		23	-5V	
22	+5V		21	+5V	
20	+5V		19	+5V	
18	+5V-2		17	+5V-2	
16	+7V		15	+7V	
14	+15V		13	+15V	
12	-11V		11	-11V	
10	+48V		9	+48V	
8	+2.5V		7	+2.5V	
6	+2.5V		5	+2.5V	
4	+2.5V		3	+2.5V	
2	+9.3V		1	+9.3V	

MOTHER BOARD
MB-627 (1/2)
BOARD NO. 1-662-310-12
LOT NO. 605-
B-¥DNV5-MB627A-12

DNV-5(SY):S/N 10001 and Higher
DNV-5(J):S/N 30001 and Higher

AIF-8 CN33

CN33 13P

13	13	MIC CONT	CN1-5 /R12
12	12	MIC CONT (G)	CN1-7 /R13
11	11	LENS TX A=NC	CN2-15
10	10	LENS RX A=NC	CN2-16
9	9	UNREG +12V	
8	8	ROTARY GND	
7	7	VTR S/S SW	CN3-1
6	6	VTR S/S SW	CN2-14
5	5	ROTARY PUSH SW	CN2-11
4	4	ROTARY A SW	CN2-12
3	3	ROTARY B SW	CN2-13
2	2	L:RETURN CONT	CN3-3
1	1		

DNV-5
Solder
SL1

AIF-8 CN25

CN25 12P

12	12	ROTARY PUSH A=NC	CN2-7
11	11	POWER SW	CN20-35 /CN27-1 /CN32-1
10	10	ROTARY A A=NC	CN2-9
9	9	ROTARY B A=NC	CN2-10
8	8	+5V	
7	7	GND	
6	6	-5V	
5	5	+48V	
4	4	FRONT MIC (Y)	CN23-18
3	3	FRONT MIC (X)	CN23-17
2	2	FRONT MIC CONT (G)	CN23-13 /R13
1	1	FRONT MIC CONT (X)	CN23-16 /R12

R12 0
R13 0

TC-80 CN22

CN22 30P

30	30	BATT ID DATA	CN4-67 /L2
29	29	CHAR (VTR)	CN2-33
28	28	CHAR BLK (VTR)	CN2-34
27	27	EXT TC OUT	CN20-1
26	26	GND	
25	25	EXT TC IN	CN20-3
24	24	PB TC	CN5-22
23	23	REC TC	CN5-20
22	22	TAPE DIRECTION	CN5-19 /CN4-15
21	21	GATED PB CTL	CN5-18 /CN4-7
20	20	1/2 VD EQV	CN5-17 /CN4-16
19	19	REGEN INT	CN5-16
18	18	CAM SY	CN2-87 /CN4-88 /CN53-16
17	17	CAM CF	CN2-88 /CN4-87 /CN53-15
16	16	L:V RESET	CN4-27 /CN5-15
15	15	L:VITC SCI	CN4-28 /RB1-2
14	14	SERIAL TC CK	CN4-29 /R17
13	13	SERIAL SY/IF TO TC	CN4-30 /RB1-4
12	12	SERIAL TC TO SY/IF	CN4-31 /RB1-6
11	11	L:TC CS	CN4-32
10	10	L:TC READY	CN4-37
9	9	VF AU	CN2-63 /R10
8	8	L:VITC CS	CN4-39 /RB1-8
7	7	UNREG +12V	
6	6	L:TC V RST	CN2-8
5	5	AUDIO MONITOR	R11
4	4	SDA(MC) I/O	CN2-62
3	3	SCL (MC)	CN2-61
2	2	+9.3V	
1	1	H:NT/L:PAL	CN2-60 /CN3-35

R11 0 — AU MON 1P — CN1-18 /CN34-14

R10 0 — AU LEVEL IND 1P — CN1-32 /CN35-20

TC-80 CN23

CN23 30P

30	+5V	
29	+5V	
28	-5V	
27	GND	
26	GND	
25	AU A/D DATA 1/2	CN4-64
24	AU A/D DATA 3/4	CN4-62
23	AU D/A DATA 1/2	CN4-63
22	AU 256 FS	CN4-66
21	AU FS	CN4-65
20	AU 64 FS	CN4-68
19	+5V	
18	FRONT MIC (Y)	CN25-4
17	FRONT MIC (X)	CN25-3
16	FRONT MIC CONT (X)	CN25-1 /R12
15	WIRELESS (X)	CN52-1
14	WIRELESS (Y)	CN52-2
13	FRONT MIC CONT (G)	CN25-2
12	AU PB2 (X)	CN20-33
11	AU PB2 (Y)	CN20-34
10	GND	
9	AU PB1 (X)	CN20-39
8	AU PB1 (Y)	CN20-40
7	GND	
6	CH1 MIC/LINE (X)	CN20-45
5	CH1 MIC/LINE (Y)	CN20-46
4	GND	
3	CH2 MIC/LINE (X)	CN20-51
2	CH2 MIC/LINE (Y)	CN20-52
1	H:POWER ON MUTE	CN20-42

CHB (DR-291) CN26

CN26 ,N'M

1	GND	
2	-11V	
3	-11V	
4	+15V	
5	+7V	
6	+7V	
7	+5V-2	
8	+5V-2	
9	-5V	
10	-5V	

POWER SW (AGL RED) CN27

CN27 4P

1	1	POWER SW	CN20-35 /CN25-11 /CN32-1
2	2	GND	
3	3	L:LIGHT ON	CN3-2 /R14
4	4	LIGHT SW	R15

R14 ,N'M — R15 0 — LIGHT CONT (PS) 1P — CN32-2

CNB-1 CN20

CN20 52P

1	EXT TC OUT	CN22-27
2	GND	
3	EXT TC IN	CN22-25
4	GND	
5	GND	
6	GENLOCK (X)	CN2-41
7	GENLOCK (G)	CN2-42
8	GND	
9	TEST OUT (X)	CN2-44
10	GND (TEST)	
11	TEST DET	CN2-35
12	GND	
13	VBS OUT (X)	CN2-46
14	GND (VBS)	
15	VBS DET	CN2-36
16	+5V	
17	GND	
18	-5V	
19	UNREG GND	
20	UNREG GND	
21	UNREG GND	
22	UNREG GND	
23	UNREG GND	
24	UNREG GND	
25	UNREG +12V	
26	UNREG +12V	
27	UNREG +12V	
28	UNREG +12V	
29	UNREG +12V	
30	UNREG +12V	
31	L:UC/H:J	CN2-23
32	+48V	
33	AU PB2 (X)	CN23-12
34	AU PB2 (Y)	CN23-11
35	POWER SW	CN25-11 /CN27-1 /CN32-1
36	GND	
37	GND	
38	GND	
39	AU PB1 (X)	CN23-9
40	AU PB1 (Y)	CN23-8
41	GND	
42	H:POWER ON MUTE	CN23-1
43	GND	
44	GND	
45	CH1 MIC/LINE (X)	CN23-6
46	CH1 MIC/LINE (Y)	CN23-5
47	GND	
48	GND	
49	GND	
50	GND	
51	CH2 MIC/LINE (X)	CN23-3
52	CH2 MIC/LINE (Y)	CN23-2

CI-12 CN53

CN53 45P

45	UNREG GND	
44	UNREG GND	
43	UNREG +12V	
42	UNREG +12V	
41	GND	
40	CA FSO	CN4-75
39	CA 512 FSO	CN4-76
38	CA 64 FSO	CN4-77
37	DIGITAL AU 3/4 IN	CN4-78
36	DIGITAL AU 1/2 IN	CN4-79
35	DIGITAL AU 3/4 OUT	CN4-80
34	DIGITAL AU 1/2 OUT	CN4-82
33	GND	
32		
31	EXT TALLY	CN2-25
30	V RESET IN/CF	CN2-32
29	H CONT (X)	CN2-37
28	H CONT (G)	CN2-38
27	RET VIDEO (X)	CN2-39
26	RET VIDEO (G)	CN2-40
25	CA DATA	CN2-66
24	GND	
23	BLKG	CN2-80
22	EXT EN	CN2-81
21	VIDEO DIR	CN2-82
20	SYNC DIR	CN2-83
19	+3V	
18	CAM HD	CN2-85 /CN4-86
17	CAM VD	CN2-86 /CN4-85
16	CAM SY	CN2-87 /CN4-88 /CN22-18
15	CAM CF	CN2-88 /CN4-87 /CN22-17
14	GND	
13	GND	
12	40P CAM CK27	R16
11	VIDEO DATA 0	CN2-89 /CN4-90
10	VIDEO DATA 1	CN2-90 /CN4-89
9	VIDEO DATA 2	CN2-91 /CN4-92
8	VIDEO DATA 3	CN2-92 /CN4-91
7	VIDEO DATA 4	CN2-93 /CN4-94
6	VIDEO DATA 5	CN2-94 /CN4-93
5	VIDEO DATA 6	CN2-95 /CN4-96
4	VIDEO DATA 7	CN2-96 /CN4-95
3	VIDEO DATA 8	CN2-97 /CN4-98
2	VIDEO DATA 9	CN2-98 /CN4-97
1		

R16 47

CN2-84 /CN4-83
CAM CK27 1P

LP-86 (BACK TALLY) CN51

CN51 2P

1	+5V	
2	BACK TALLY	CN2-26 /L1

CN4-67 /CN22-30
2P 1P BATT ID DATA
L2 47μH
C2 0.01 -2
C3 0.01 -2

CN2-26 /CN51-2
1P BACK TALLY
L1 47μH
C1 0.01 -2

BATTERY INTF CN50

CN50 3P

1	BATT REM	CN2-31 /C2
2	BATT ID DET	C3 /L2
3	LIGHT CONT	L1 /C1

RX-26 (WIRELESS) CN52

CN52 5P

1	WIRELESS (X)	CN23-15
2	WIRELESS (Y)	CN23-14
3	+7V	
4	-5V	
5	GND	

FAN CN54

CN54 2P

1	MOTOR GND	
2	FAN	R1 /R5 /C4

R1 1/2W .N'M
R4 .N'M
R5 0
C4 220 16V -3

CN3-21
1P FAN DRIVE

CN50-2	2P	BATT ID DET
CN50-3	2P	LIGHT CONT
CN54-2	2P	FAN
CN22-5	2P	AUDIO MONITOR
CN27-4	2P	LIGHT SW
CN53-12	2P	40P CAM CK27
CN22-9	2P	VF AU
CN2-59	1P	CK27
CN4-83	1P	VTR CK27

BATT ID DET
LIGHT CONT
FAN
AUDIO MONITOR
LIGHT SW
40P CAM CK27
VF AU
CK27
VTR CK27

MOTHER BOARD
MB-627 (2/2)
BOARD NO. 1-662-310-12
LOT NO. 605-
B-¥DNV5-MB627A-12

DNW-7/90/90WS(SY):S/N 10001 and Higher
DNW-7/90/90WS(J):S/N 30001 and Higher
DNW-7P/90P/90WSP(SY):S/N 40001 and Higher

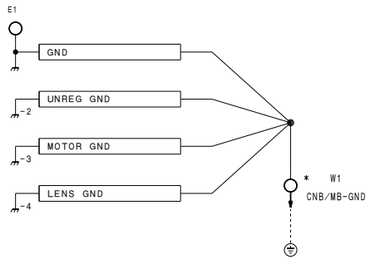

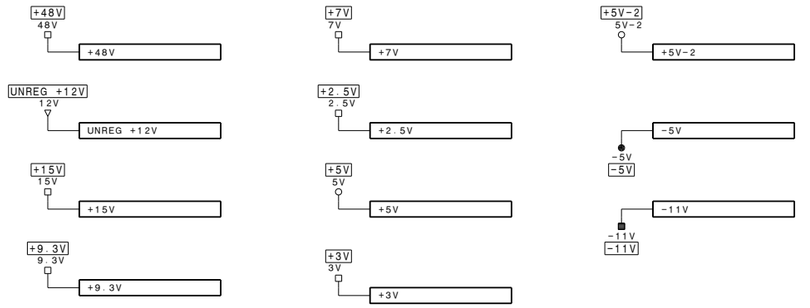

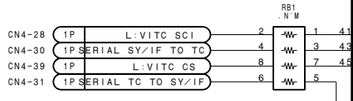

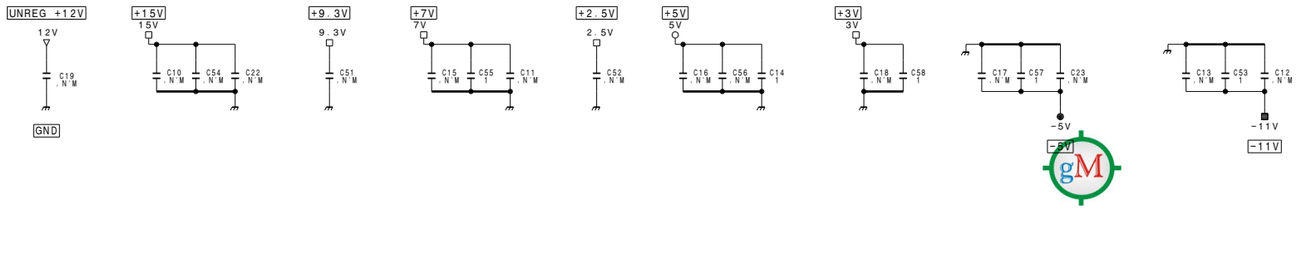

DCP-1 CN1

CN1 50P

1	LD (VA12-1)	CN34-29	2	L:POWER SAVE	CN34-30
3	LD (VA8)	CN34-27	4	GND	
5	SCL (SW)	CN33-13 /R12	6	B BSH	CN34-26
7	SDA (SW)	CN33-12	8	R BSH	CN34-24
9	LD (VA12-2)	CN34-21	10	G BSH	CN34-22
11	GND		12	GND	
13	B IN (G)	CN34-17	14	B WSH	CN34-18
15	B IN (X)	CN34-15	16	R WSH	CN34-16
17	B GND	CN34-13	18	G WSH	CN34-14 /R11
19	R IN (G)	CN34-11	20	GND	
21	R IN (X)	CN34-9	22	TEST SAW	CN34-10
23	R GND	CN34-7	24	B FB	CN34-8
25	G IN (G)	CN34-5	26	R FB	CN34-6
27	G IN (X)	CN34-3	28	G FB	CN34-4
29	G GND	CN34-1	30	GND	
31	GND		32	TG18/14M (X)	CN35-20
33	GND		34	TG36/28M (X)	CN35-18
35	SG FLD	CN35-15	36	VD	CN35-16
37	HTSG	CN35-13	38	HD	CN35-14
39	VCO CONT (G)	CN35-11	40	VCO CONT (X)	CN35-12
41	LD (DR8)	CN35-9 /RB1-1	42	F MIC CONT	CN35-10 /R17
43	SCL (CHB)	CN35-7 /CN34-25 /RB1-3	44	LD (TG/BC)	CN35-8 /RB1-5
45	TEMP IN	CN35-5 /RB1-7	46	SDA (CHB)	CN35-6 /CN34-23
47	ND PSTN	CN35-3	48	CC PSTN	CN35-4
49	GND		50	GND	

DCP-1 CN2

CN2 100P

1	GND		2	GND	
3	L:REC ENABLE	CN4-4	4	SCK AT-SY	CN4-3
5	REF 4	CN4-6	6	CAM SYNC DET	CN4-5
7	ROTARY PUSH	CN25-12	8	L:TC V RST	CN22-6
9	ROTARY A	CN25-10	10	ROTARY B	CN25-9
11	IRIS PSTN	CN33-5	12	ZOOM PSTN	CN33-4
13	FOCUS PSTN	CN33-3	14	IRIS CONT	CN33-6
15	LENS TX	CN33-11	16	LENS RX	CN33-10
17	+9.3V		18	+9.3V	
19	UNREG +12V		20	UNREG +12V	
21	H:BATT ALARM	CN4-22	22	H:CA ENABLE	CN4-21
23	L:UC/H:J	CN20-31	24	H:VTR SAVE LAMP	CN4-23
25	EXT TALLY	CN53-31	26	BACK TALLY	CN51-2 /L1
27	GND		28	GND	
29	GND		30	GND	
31	BATT REM	CN50-1	32	V RESET IN/CF	CN53-30
33	CHAR (VTR)	CN22-29	34	CHAR BLK (VTR)	CN22-28
35	TEST DET	CN20-11	36	VBS DET	CN20-15
37	H CONT (X)	CN53-29	38	H CONT (G)	CN53-28
39	RET VIDEO (X)	CN53-27	40	RET VIDEO (G)	CN53-26
41	GENLOCK (X)	CN20-6	42	GENLOCK (G)	CN20-7
43	GND (TEST GND)		44	TEST OUT (X)	CN20-9
45	GND (VBS GND)		46	VBS OUT (X)	CN20-13
47	RM TEST (X)	CN31-4	48	-5V	
49	-5V		50	-5V	
51	+7V		52	+7V	
53	+5V		54	+5V	
55	+5V		56	VTR SAVE	CN4-1
57	SCI SY TO AT	CN4-26	58	SCI AT TO SY	CN4-25
59	CK27	R19	60	H:NT/L:PAL	CN3-35 /CN22-1
61	SCL (MC)	CN22-3	62	SDA (MC) I/O	CN22-4
63	VF AU	CN22-9 /R10	64	SD I/O (RM)	CN31-2
65	SD (RM)	CN31-1	66	CA DATA	CN53-25
67	GND		68	GND	
69	VTR EN	CN4-69	70	+3V	
71	+3V		72	+3V	
73	+3V		74	+3V	
75	GND		76	GND	
77	GND		78	GND	
79	GND		80	BLKG	CN53-23
81	EXT EN	CN53-22	82	VIDEO DIR	CN53-21
83	SYNC DIR	CN53-20	84	CAM CK27	R16 /R18
85	CAM HD	CN4-86 /CN53-18	86	CAM VD	CN4-85 /CN53-17
87	CAM SY	CN22-18 /CN4-88 /CN53-16	88	CAM CF	CN22-17 /CN4-87 /CN53-15
89	VIDEO DATA 0	CN4-90 /CN53-11	90	VIDEO DATA 1	CN4-89 /CN53-10
91	VIDEO DATA 2	CN4-92 /CN53-9	92	VIDEO DATA 3	CN4-91 /CN53-8
93	VIDEO DATA 4	CN4-94 /CN53-7	94	VIDEO DATA 5	CN4-93 /CN53-6
95	VIDEO DATA 6	CN4-96 /CN53-5	96	VIDEO DATA 7	CN4-95 /CN53-4
97	VIDEO DATA 8	CN4-98 /CN53-3	98	VIDEO DATA 9	CN4-97 /CN53-2
99	GND		100	GND	

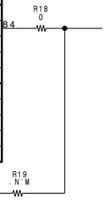

KY-293 CN30

CN30 10P

1	+5V	
2	GND	
3	L:PLAY KEY	CN4-47
4	L:REW KEY	CN4-46
5	L:EJECT KEY	CN4-45
6	L:FF KEY	CN4-44
7	L:STOP KEY	CN4-43
8	L:FF LAMP	CN4-42
9	L:REW LAMP	CN4-41
10	L:PLAY LAMP	CN4-40

REMOTE CN31

CN31 6P

1	SD (RM)	CN2-65
2	SD I/O (RM)	CN2-64
3	UNREG GND	
4	RM TEST (X)	CN2-47
5	GND	
6	UNREG +12V	

SW-823 (STR GRAY) CN32

CN32 2P

1	POWER SW	CN20-35 /CN25-11 /CN27-1
2	LIGHT CONT (PS)	R14 /R15

CHB (VA-167) CN34

CN34 30P

30	L:POWER SAVE	CN1-2	29	LD (VA12-1)	CN1-1
28	GND		27	LD (VA8)	CN1-3
26	B BSH	CN1-6	25	SCL (CHB)	CN1-43 /CN35-7 /RB1-3
24	R BSH	CN1-8	23	SDA (CHB)	CN1-46 /CN35-6
22	G BSH	CN1-10	21	LD (VA12-2)	CN1-9
20	GND		19	GND	
18	B WSH	CN1-14	17	B IN (G)	CN1-13
16	R WSH	CN1-16	15	B IN (X)	CN1-15
14	G WSH	CN1-18 /R11	13	B GND	CN1-17
12	GND		11	R IN (G)	CN1-19
10	TEST SAW	CN1-22	9	R IN (X)	CN1-21
8	B FB	CN1-24	7	R GND	CN1-23
6	R FB	CN1-26	5	G IN (G)	CN1-25
4	G FB	CN1-28	3	G IN (X)	CN1-27
2	GND		1	G GND	CN1-29

CHB (BC-25/-26) CN35

CN35 20P

19	GND		20	TG18/14M (X)	CN1-32 /R10
17	GND		18	TG36/28M (X)	CN1-34
15	SG FLD	CN1-35	16	VD	CN1-36
13	HTSG	CN1-37	14	HD	CN1-38
11	VCO CONT (G)	CN1-39	12	VCO CONT (X)	CN1-40
9	LD (DR8)	CN1-41 /RB1-1	10	F MIC CONT	CN1-42 /R17
7	SCL (CHB)	CN1-43 /CN34-25 /RB1-3	8	LD (TG/BC)	CN1-44 /RB1-5
5	TEMP IN	CN1-45 /RB1-7	6	SDA (CHB)	CN1-46 /CN34-23
3	ND PSTN	CN1-47	4	CC PSTN	CN1-48
1	GND	CN1-49	2	GND	CN1-50

DVP-1 CN3

CN3 50P

1	VTR S/S SW	CN33-7	2	L:LIGHT ON	CN27-3 /R14
3	L:RETURN CONT	CN33-2	4	REC A ENABLE	CN5-59
5	MDC/DVP	CN5-61	6	SERIAL SV CK	CN5-62
7	SERIAL SV TO SY	CN5-63	8	SERIAL SY TO SV	CN5-64
9	L:SV READY	CN5-65	10	L:SERVO CS	CN5-66
11	PB SEL D	CN5-43	12	PB SEL C	CN5-44
13	PB SEL B	CN5-45	14	PB SEL A	CN5-46
15	SST VD	CN5-49	16	CAP SPEED	CN5-48
17	REF VD	CN5-52	18	SST CF	CN5-50
19	MDC/DVP1	CN5-51	20	MDC/DVP0	CN5-60
21	FAN DRIVE	R5	22	SV BNK3	CN5-42
23	SV BNK2	CN5-41	24	SV BNK1	CN5-40
25	SV BNK0	CN5-39	26	EDIT AUDIO ID1	CN5-37
27	EDIT AUDIO ID0	CN5-38	28	NT PULS	CN5-35
29	EDIT AUDIO ID2	CN5-36	30	OUT BUSY	CN5-33
31	READ START	CN5-34	32	TRACK START	CN5-31
33	GOP START	CN5-32	34	PB ACH ENV	CN5-23
35	H:NT/L:PAL	CN2-60 /CN22-1	36		
37	REC A PB	CN5-80	38	REC A PB ENV	CN5-79
39	GND		40	GND	
41	GND		42	GND	
43	RF A(Y)	CN5-70	44	RF A(X)	CN5-69
45	RF B(Y)	CN5-74	46	RF B(X)	CN5-73
47	RF C(Y)	CN5-72	48	RF C(X)	CN5-71
49	RF D(Y)	CN5-76	50	RF D(X)	CN5-75

DVP-1 CN4

CN4 100P

1	VTR SAVE	CN2-56	2	SV REF FRAME	CN5-24
3	SCK AT-SY	CN2-4	4	L:REC ENABLE	CN2-3
5	CAM SYNC DET	CN2-6	6	REF 4	CN2-5
7	GATED PB CTL	CN5-18 /CN22-21	8	RF ALARM WINDOW	CN5-47
9	REC AUDIO ID0	CN5-30	10	REC AUDIO ID1	CN5-29
11	REC AUDIO ID2	CN5-28	12	SV VD	CN5-27
13	SV CF	CN5-26	14	SV 1/2 GOP	CN5-25
15	TAPE DIRECTION	CN5-19 /CN22-22	16	1/2 VD EQV	CN5-17 /CN22-20
17	+9.3V		18		
19	UNREG +12V		20	UNREG +12V	
21	H:CA ENABLE	CN2-22	22	H:BATT ALARM	CN2-21
23	H:VTR SAVE LAMP	CN2-24	24		
25	SCI AT TO SY	CN2-58	26	SCI SY TO AT	CN2-57
27	L:V RESET	CN22-16 /CN5-15	28	L:VITC SCI	CN22-15 /RB1-2
29	SERIAL TC CK	CN22-14 /R17	30	SERIAL SY/IF TO TC	CN22-13 /RB1-4
31	SERIAL TC TO SY/IF	CN22-12 /RB1-6	32	L:TC CS	CN22-11
33	+2.5V		34	+2.5V	
35	+2.5V		36	+2.5V	
37	L:TC READY	CN22-10	38		
39	L:VITC CS	CN22-8 /RB1-8	40	L:PLAY LAMP	CN30-10
41	L:REW LAMP	CN30-9	42	L:FF LAMP	CN30-8
43	L:STOP KEY	CN30-7	44	L:FF KEY	CN30-6
45	L:EJECT KEY	CN30-5	46	L:REW KEY	CN30-4
47	L:PLAY KEY	CN30-3	48	-5V	
49	-5V		50	-5V	
51	+7V		52	+7V	
53	+5V		54	+5V	
55	+5V		56	GND	
57	GND		58	GND	
59	GND		60	GND	
61	GND		62	AU A/D DATA 3/4	CN23-24
63	AU D/A DATA 1/2	CN23-23	64	AU A/D DATA 1/2	CN23-25
65	AU FS	CN23-21	66	AU 256 FS	CN23-22
67	BATT ID DATA	CN22-30 /L2	68	AU 64 FS	CN23-20
69	VTR EN	CN2-69	70	+3V	
71	+3V		72	+3V	
73	+3V		74	+3V	
75	CA FSO	CN53-40	76	CA 512 FSO	CN53-39
77	CA 64 FSO	CN53-38	78	DIGITAL AU 3/4 IN	CN53-37
79	DIGITAL AU 1/2 IN	CN53-36	80	DIGITAL AU 3/4 OUT	CN53-35
81	GND		82	DIGITAL AU 1/2 OUT	CN53-34
83	VTR CK27	R18 /R19	84	GND	
85	CAM VD	CN2-86 /CN53-17	86	CAM HD	CN2-85 /CN53-18
87	CAM CF	CN2-88 /CN22-17 /CN53-15	88	CAM SY	CN2-87 /CN22-18 /CN53-16
89	VIDEO DATA 1	CN2-90 /CN53-10	90	VIDEO DATA 0	CN2-89 /CN53-11
91	VIDEO DATA 3	CN2-92 /CN53-8	92	VIDEO DATA 2	CN2-91 /CN53-9
93	VIDEO DATA 5	CN2-94 /CN53-6	94	VIDEO DATA 4	CN2-93 /CN53-7
95	VIDEO DATA 7	CN2-96 /CN53-4	96	VIDEO DATA 6	CN2-95 /CN53-5
97	VIDEO DATA 9	CN2-98 /CN53-2	98	VIDEO DATA 8	CN2-97 /CN53-3
99	GND		100	GND	

MDC-5 CN5

CN5 80P

79	REC A PB ENV	CN3-38	80	REC A PB	CN3-37
77	GND		78		
75	RF D(X)	CN3-50	76	RF D(Y)	CN3-49
73	RF B(X)	CN3-46	74	RF B(Y)	CN3-45
71	RF C(X)	CN3-48	72	RF C(Y)	CN3-47
69	RF A(X)	CN3-44	70	RF A(Y)	CN3-43
67	GND		68		
65	L:SV READY	CN3-9	66	L:SERVO CS	CN3-10
63	SERIAL SV TO SY	CN3-7	64	SERIAL SY TO SV	CN3-8
61	MDC/DVP	CN3-5	62	SERIAL SV CK	CN3-6
59	REC A ENABLE	CN3-4	60	MDC/DVP0	CN3-20
57	+5V		58	+3V	
55	+5V		56	+5V	
53	-5V		54	-5V	
51	MDC/DVP1	CN3-19	52	REF VD	CN3-17
49	SST VD	CN3-15	50	SST CF	CN3-18
47	RF ALARM WINDOW	CN4-8	48	CAP SPEED	CN3-16
45	PB SEL B	CN3-13	46	PB SEL A	CN3-14
43	PB SEL D	CN3-11	44	PB SEL C	CN3-12
41	SV BNK2	CN3-23	42	SV BNK3	CN3-22
39	SV BNK0	CN3-25	40	SV BNK1	CN3-24
37	EDIT AUDIO ID1	CN3-26	38	EDIT AUDIO ID0	CN3-27
35	NT PULS	CN3-28	36	EDIT AUDIO ID2	CN3-29
33	OUT BUSY	CN3-30	34	READ START	CN3-31
31	TRACK START	CN3-32	32	GOP START	CN3-33
29	REC AUDIO ID1	CN4-10	30	REC AUDIO ID0	CN4-9
27	SV VD	CN4-12	28	REC AUDIO ID2	CN4-11
25	SV 1/2 GOP	CN4-14	26	SV CF	CN4-13
23	PB ACH ENV	CN3-34	24	SV REF FRAME	CN4-2
21			22	PB TC	CN22-24
19	TAPE DIRECTION	CN4-15 /CN22-22	20	REC TC	CN22-23
17	1/2 VD EQV	CN4-16 /CN22-20	18	GATED PB CTL	CN22-21 /CN4-7
15	L:V RESET	CN4-27 /CN22-16	16	REGEN INT	CN22-19
13	GND		14	GND	
11	GND		12	GND	
9	GND		10	GND	
7	UNREG +12V		8	UNREG +12V	
5	UNREG +12V		6	UNREG +12V	
3	MOTOR GND		4	MOTOR GND	
1	MOTOR GND		2	MOTOR GND	

RE-119 CN6

CN6 50P

50	UNREG GND		49	UNREG GND	
48	UNREG GND		47	UNREG GND	
46	UNREG GND		45	UNREG GND	
44	UNREG GND		43	UNREG GND	
42	UNREG +12V		41	UNREG +12V	
40	UNREG +12V		39	UNREG +12V	
38	UNREG +12V		37	UNREG +12V	
36	UNREG +12V		35	UNREG +12V	
34	+3V		33	+3V	
32	+3V		31	+3V	
30	+3V		29	+3V	
28	-5V		27	-5V	
26	-5V		25	-5V	
24	-5V		23	-5V	
22	+5V		21	+5V	
20	+5V		19	+5V	
18	+5V-2		17	+5V-2	
16	+7V		15	+7V	
14	+15V		13	+15V	
12	-11V		11	-11V	
10	+48V		9	+48V	
8	+2.5V		7	+2.5V	
6	+2.5V		5	+2.5V	
4	+2.5V		3	+2.5V	
2	+9.3V		1	+9.3V	

MOTHER BOARD
MB-627 (1/2)
BOARD NO. 1-662-310-12
LOT NO. 604-
B-¥DNW7-MB627-12

MB-627 (2/2) Others(DNW-7/90/90WS)

DNW-7/90/90WS(SY):S/N 10001 and Higher
DNW-7/90/90WS(J):S/N 30001 and Higher
DNW-7P/90P/90WSP(SY):S/N 40001 and Higher

AIF-8 CN33

CN33 13P

13	SCL (SW)	CN1-5 /R12
12	SDA (SW)	CN1-7 /R13
11	LENS TX	CN2-15
10	LENS RX	CN2-16
9	UNREG +12V	
8	LENS GND	
7	VTR S/S SW	CN3-1
6	IRIS CONT	CN2-14
5	IRIS PSTN	CN2-11
4	ZOOM PSTN	CN2-12
3	FOCUS PSTN	CN2-13
2	L:RETURN CONT	CN3-3
1		

SL1

AIF-8 CN25

CN25 12P

12	ROTARY PUSH	CN2-7
11	POWER SW	CN20-35 /CN27-1 /CN32-1
10	ROTARY A	CN2-9
9	ROTARY B	CN2-10
8	+5V	
7	GND	
6	-5V	
5	+48V	
4	FRONT MIC (Y)	CN23-18
3	FRONT MIC (X)	CN23-17
2	FRONT MIC CONT (G)	CN23-13 /R13
1	FRONT MIC CONT (X)	CN23-16 /R12

R12 .N·M
R13 .N·M

TC-80 CN22

CN22 30P

30	BATT ID DATA	CN4-67 /L2
29	CHAR (VTR)	CN2-33
28	CHAR BLK (VTR)	CN2-34
27	EXT TC OUT	CN20-1
26	GND	
25	EXT TC IN	CN20-3
24	PB TC	CN5-22
23	REC TC	CN5-20
22	TAPE DIRECTION	CN5-19 /CN4-15
21	GATED PB CTL	CN5-18 /CN4-7
20	1/2 VD EQV	CN5-17 /CN4-16
19	REGEN INT	CN5-16
18	CAM SY	CN2-87 /CN4-88 /CN53-16
17	CAM CF	CN2-88 /CN4-87 /CN53-15
16	L:V RESET	CN4-27 /CN5-15
15	L:VITC SCI	CN4-28 /RB1-2
14	SERIAL TC CK	CN4-29 /R17
13	SERIAL SY/IF TO TC	CN4-30 /RB1-4
12	SERIAL TC TO SY/IF	CN4-31 /RB1-6
11	L:TC CS	CN4-32
10	L:TC READY	CN4-37
9	VF AU	R10 /CN2-63
8	L:VITC CS	CN4-39 /RB1-8
7	UNREG +12V	
6	L:TC V RST	CN2-8
5	AUDIO MONITOR	R11
4	SDA (MC) I/O	CN2-62
3	SCL (MC)	CN2-61
2	+9.3V	
1	H:NT/L:PAL	CN2-60 /CN3-35

R11 .N·M — G WSH — 1P — CN34-14 /CN1-18

R10 .N·M — TG18/14M (X) — 1P — CN35-20

TC-80 CN23

CN23 30P

30	+5V	
29	+5V	
28	-5V	
27	GND	
26	GND	
25	AU A/D DATA 1/2	CN4-64
24	AU A/D DATA 3/4	CN4-62
23	AU D/A DATA 1/2	CN4-63
22	AU 256 FS	CN4-66
21	AU FS	CN4-65
20	AU 64 FS	CN4-68
19	+5V	
18	FRONT MIC (Y)	CN25-4
17	FRONT MIC (X)	CN25-3
16	FRONT MIC CONT (X)	CN25-1 /R12
15	WIRELESS (X)	CN52-1
14	WIRELESS (Y)	CN52-2
13	FRONT MIC CONT (G)	CN25-2
12	AU PB2 (X)	CN20-33
11	AU PB2 (Y)	CN20-34
10	GND	
9	AU PB1 (X)	CN20-39
8	AU PB1 (Y)	CN20-40
7	GND	
6	CH1 MIC/LINE (X)	CN20-45
5	CH1 MIC/LINE (Y)	CN20-46
4	GND	
3	CH2 MIC/LINE (X)	CN20-51
2	CH2 MIC/LINE (Y)	CN20-52
1	H:POWER ON MUTE	CN20-42

CHB (DR-291) CN26

CN26 10P

1	GND
2	-11V
3	-11V
4	+15V
5	+7V
6	+7V
7	+5V-2
8	+5V-2
9	-5V
10	-5V

POWER SW (AGL RED) CN27

CN27 .N·M

1	POWER SW	CN20-35 /CN25-11 /CN32-1
2	GND	
3	L:LIGHT ON	CN3-2 /R14
4	LIGHT SW	R15

R14 0 — CN32-2 — LIGHT CONT (PS) — 1P

R15 .N·M

5-116

CNB-1 CN20

CN20 52P

1	EXT TC OUT	CN22-27
2	GND	
3	EXT TC IN	CN22-25
4	GND	
5	GND	
6	GENLOCK (X)	CN2-41
7	GENLOCK (G)	CN2-42
8	GND	
9	TEST OUT (X)	CN2-44
10	GND (TEST)	
11	TEST DET	CN2-35
12	GND	
13	VBS OUT (X)	CN2-46
14	GND (VBS)	
15	VBS DET	CN2-36
16	+5V	
17	GND	
18	-5V	
19	UNREG GND	
20	UNREG GND	
21	UNREG GND	
22	UNREG GND	
23	UNREG GND	
24	UNREG GND	
25	UNREG +12V	
26	UNREG +12V	
27	UNREG +12V	
28	UNREG +12V	
29	UNREG +12V	
30	UNREG +12V	
31	L:UC/H:J	CN2-23
32	+48V	
33	AU PB2 (X)	CN23-12
34	AU PB2 (Y)	CN23-11
35	POWER SW	CN25-11 /CN27-1 /CN32-1
36	GND	
37	GND	
38	GND	
39	AU PB1 (X)	CN23-9
40	AU PB1 (Y)	CN23-8
41	GND	
42	H:POWER ON MUTE	CN23-1
43	GND	
44	GND	
45	CH1 MIC/LINE (X)	CN23-6
46	CH1 MIC/LINE (Y)	CN23-5
47	GND	
48	GND	
49	GND	
50	GND	
51	CH2 MIC/LINE (X)	CN23-3
52	CH2 MIC/LINE (Y)	CN23-2

CI-12 CN53

CN53 45P

45	UNREG GND	
44	UNREG GND	
43	UNREG +12V	
42	UNREG +12V	
41	GND	
40	CA FSO	CN4-75
39	CA 512 FSO	CN4-76
38	CA 64 FSO	CN4-77
37	DIGITAL AU 3/4 IN	CN4-78
36	DIGITAL AU 1/2 IN	CN4-79
35	DIGITAL AU 3/4 OUT	CN4-80
34	DIGITAL AU 1/2 OUT	CN4-82
33	GND	
32		
31	EXT TALLY	CN2-25
30	V RESET IN/CF	CN2-32
29	H CONT (X)	CN2-37
28	H CONT (G)	CN2-38
27	RET VIDEO (X)	CN2-39
26	RET VIDEO (G)	CN2-40
25	CA DATA	CN2-66
24	GND	
23	BLKG	CN2-80
22	EXT EN	CN2-81
21	VIDEO DIR	CN2-82
20	SYNC DIR	CN2-83
19	+3V	
18	CAM HD	CN2-85 /CN4-86
17	CAM VD	CN2-86 /CN4-85
16	CAM SY	CN2-87 /CN4-88 /CN22-18
15	CAM CF	CN2-88 /CN4-87 /CN22-17
14	GND	
13	GND	
12	40P CAM CK27	R16
11	VIDEO DATA 0	CN2-89 /CN4-90
10	VIDEO DATA 1	CN2-90 /CN4-89
9	VIDEO DATA 2	CN2-91 /CN4-92
8	VIDEO DATA 3	CN2-92 /CN4-91
7	VIDEO DATA 4	CN2-93 /CN4-94
6	VIDEO DATA 5	CN2-94 /CN4-93
5	VIDEO DATA 6	CN2-95 /CN4-96
4	VIDEO DATA 7	CN2-96 /CN4-95
3	VIDEO DATA 8	CN2-97 /CN4-98
2	VIDEO DATA 9	CN2-98 /CN4-97
1		

12

R16 47

CN2-84/CN4-83

CAM CK27 1P

LP-86 (BACK TALLY) CN51

CN51 2P

1	+5V	
2	BACK TALLY	CN2-26 /L1

BATTERY INTF CN50

CN50 3P

1	BATT REM	CN2-31 /C2
2	BATT ID DET	C3 /L2
3	LIGHT CONT	L1 /C1

CN4-67 /CN22-30

1P 2P BATT ID DATA

L2 47µH

C2 0.01 -2

C3 0.01 -2

CN2-26 /CN51-2

1P BACK TALLY

L1 47µH

C1 0.01 -2

RX-26 (WIRELESS) CN52

CN52 5P

1	WIRELESS (X)	CN23-15
2	WIRELESS (Y)	CN23-14
3	+7V	
4	-5V	
5	GND	

FAN CN54

CN54 2P

1	MOTOR GND	
2	FAN	R1 /R5/ C4

R1 1.2/2W .N'M

R4 .N'M

R5 0

C4 220 16V -3

CN3-21

1P FAN DRIVE

CN50-2	2P	BATT ID DET
CN50-3	2P	LIGHT CONT
CN54-2	2P	FAN
CN22-5	2P	AUDIO MONITOR
CN27-4	2P	LIGHT SW
CN53-12	2P	40P CAM CK27
CN4-83		VTR CK27
CN2-84		CAM CK27
CN2-59		CK27

BATT ID DET
LIGHT CONT
FAN
AUDIO MONITOR
LIGHT SW
40P CAM CK27
VTR CK27
CAM CK27
CK27

MOTHER BOARD
MB-627 (2/2)
BOARD NO. 1-662-310-12
LOT NO. 604-
B-¥DNW7-MB627-12

DNW-7/90/90WS(SY):S/N 10001 and Higher
DNW-7/90/90WS(J):S/N 30001 and Higher
DNW-7P/90P/90WSP(SY):S/N 40001 and Higher

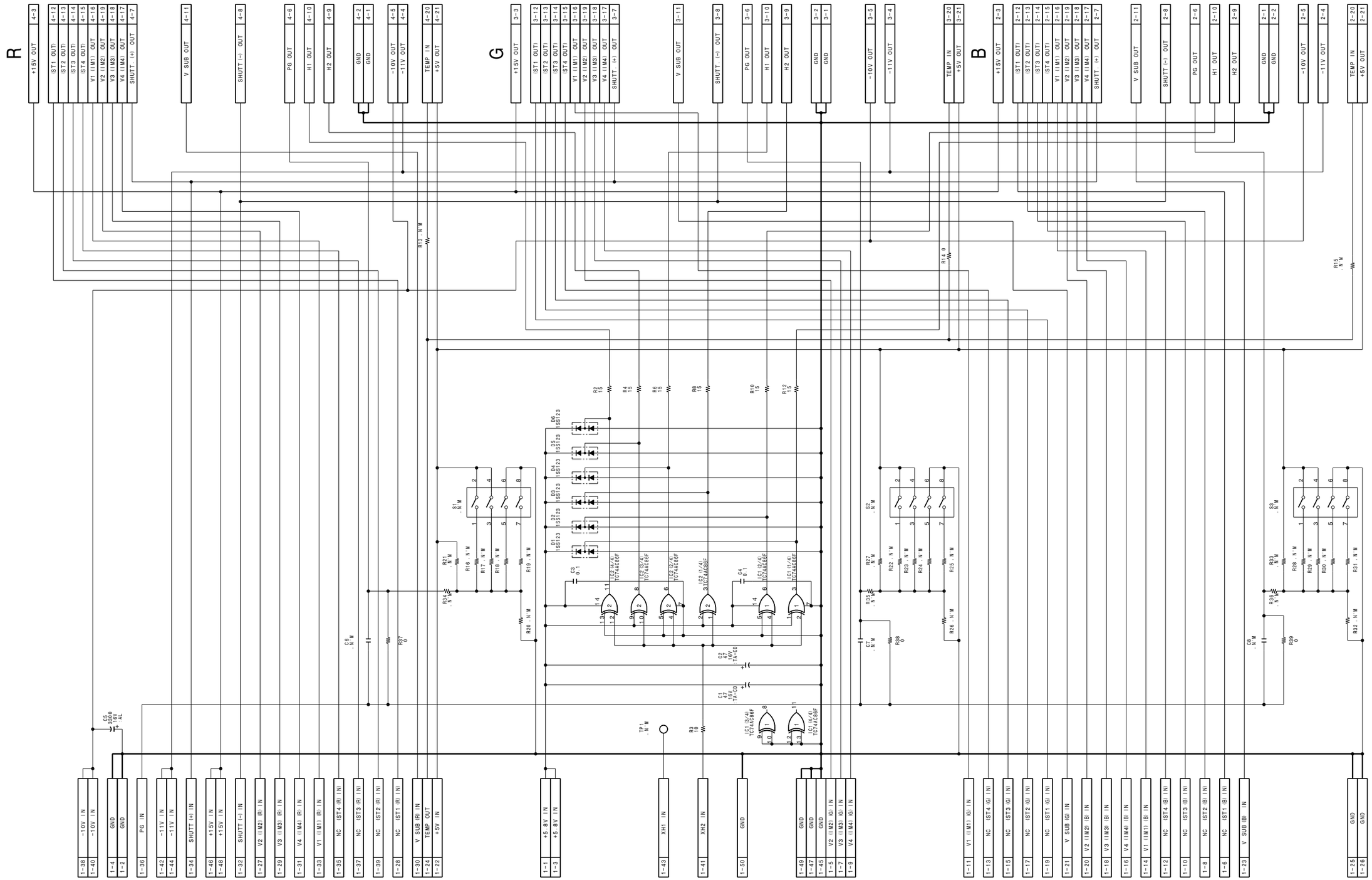

CONNECTOR BOARD FOR BI-96
CN-1183
BOARD NO. 1-662-322-11
LOT NO. 604-
B-¥DNW7-CN1183-X1

http://getMANUAL.com

DNW-7/90/90WS(SY):S/N 10001 and Higher
DNW-7/90/90WS(J):S/N 30001 and Higher
DNW-7P/90P/90WSP(SY):S/N 40001 and Higher

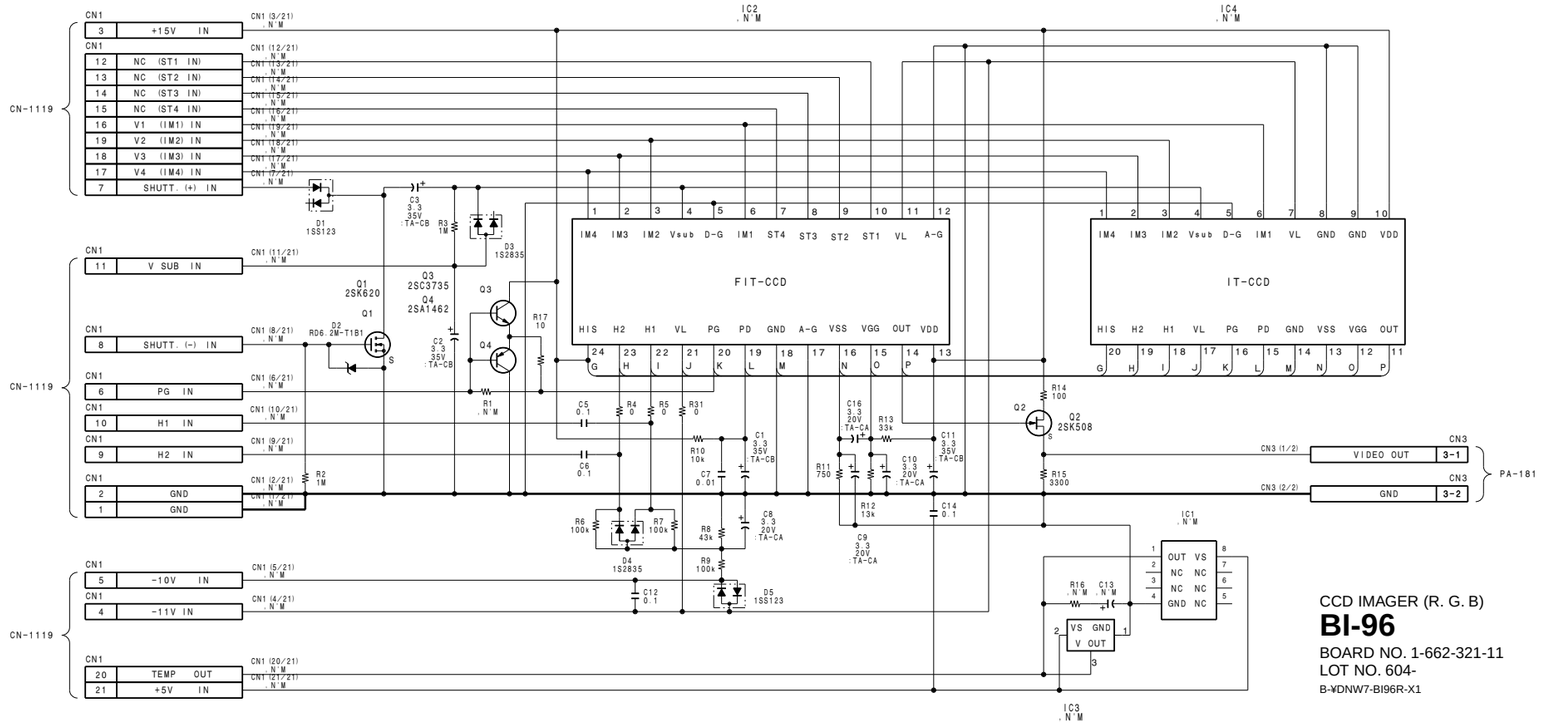

CCD IMAGER (R. G. B)

BI-96

BOARD NO. 1-662-321-11
LOT NO. 604-

B-¥DNW7-BI96R-X1

DNW-7/90/90WS(SY):S/N 10001 and Higher
DNW-7/90/90WS(J):S/N 30001 and Higher
DNW-7P/90P/90WSP(SY):S/N 40001 and Higher

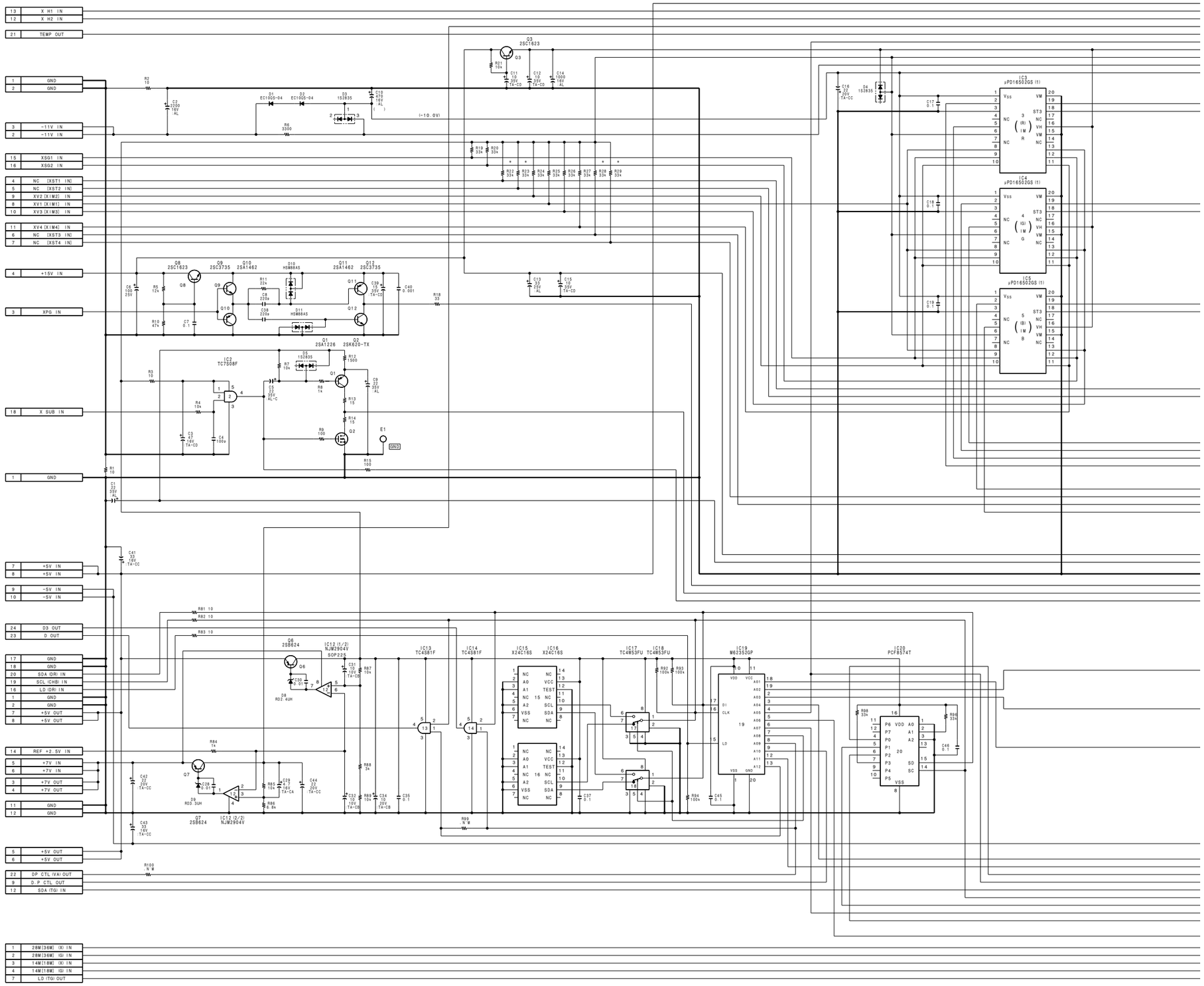

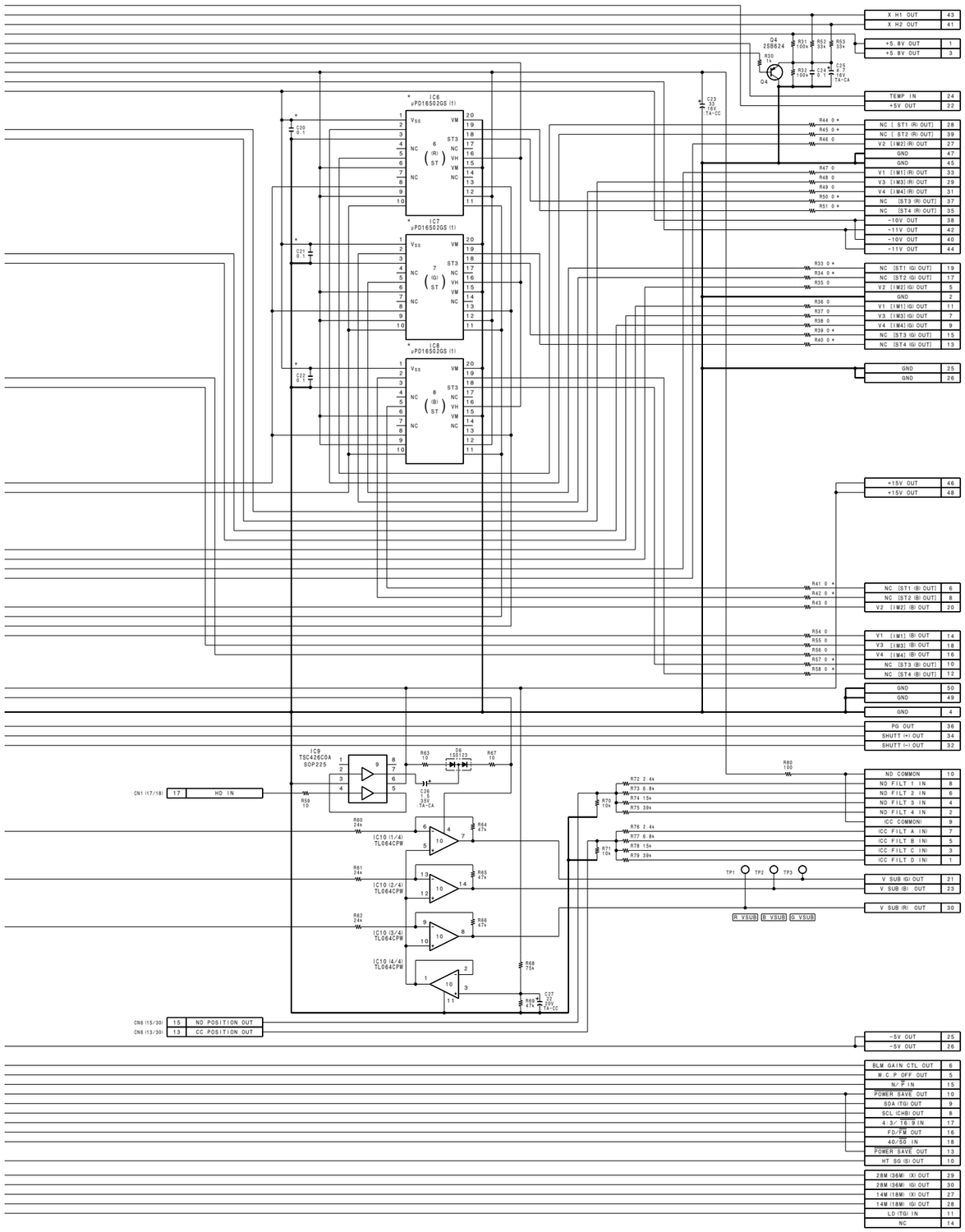

CCD DRIVER

DR-291

BOARD NO. 1-662-316-11

LOT NO. 604-

B-¥DNW7-DR291-X1

DNW-7/90/90WS(SY):S/N 10001 and Higher
DNW-7/90/90WS(J):S/N 30001 and Higher
DNW-7P/90P/90WSP(SY):S/N 40001 and Higher

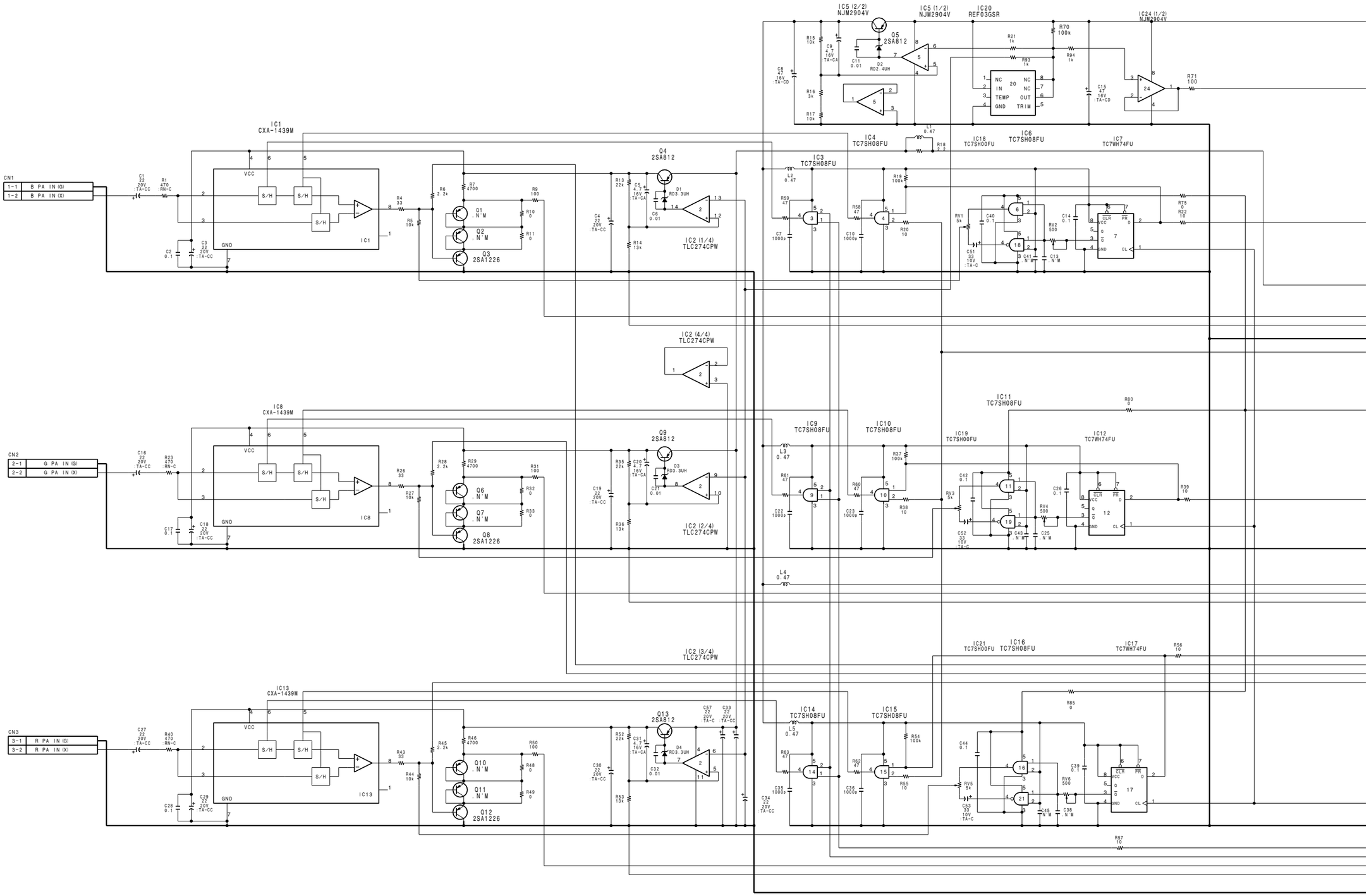

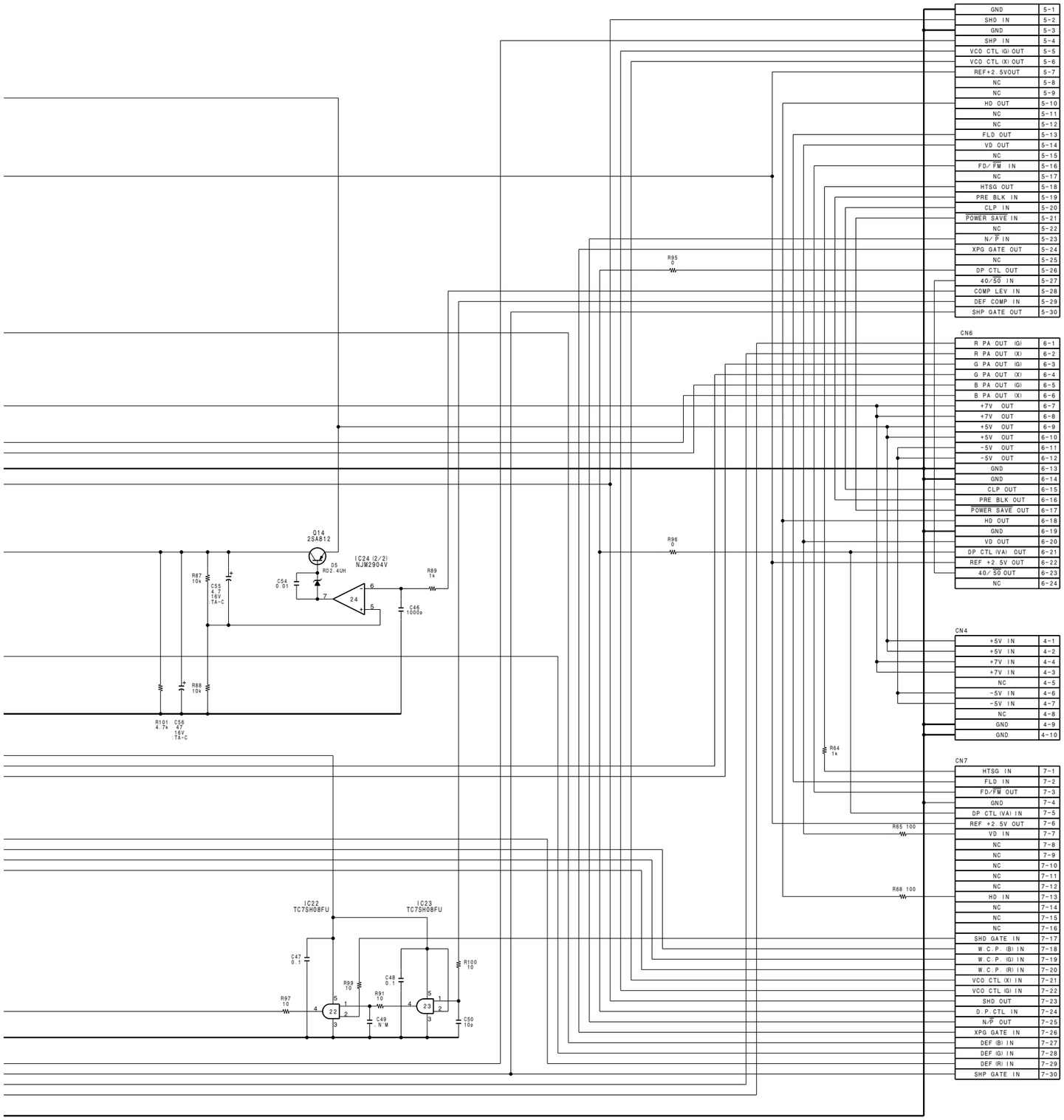

GND	5-1
SHD IN	5-2
GND	5-3
SHP IN	5-4
VCO CTL (G) OUT	5-5
VCO CTL (X) OUT	5-6
REF+2.5VOUT	5-7
NC	5-8
NC	5-9
HD OUT	5-10
NC	5-11
NC	5-12
FLD OUT	5-13
VD OUT	5-14
NC	5-15
FD/$\overline{FM}$ IN	5-16
NC	5-17
HTSG OUT	5-18
PRE BLK IN	5-19
CLP IN	5-20
$\overline{POWER\ SAVE}$ IN	5-21
NC	5-22
N/$\overline{P}$ IN	5-23
XPG GATE OUT	5-24
NC	5-25
DP CTL OUT	5-26
40/$\overline{50}$ IN	5-27
COMP LEV IN	5-28
DEF COMP IN	5-29
SHP GATE OUT	5-30

CN6

R PA OUT (G)	6-1
R PA OUT (X)	6-2
G PA OUT (G)	6-3
G PA OUT (X)	6-4
B PA OUT (G)	6-5
B PA OUT (X)	6-6
+7V OUT	6-7
+7V OUT	6-8
+5V OUT	6-9
+5V OUT	6-10
-5V OUT	6-11
-5V OUT	6-12
GND	6-13
GND	6-14
CLP OUT	6-15
PRE BLK OUT	6-16
$\overline{POWER\ SAVE}$ OUT	6-17
HD OUT	6-18
GND	6-19
VD OUT	6-20
DP CTL (VA) OUT	6-21
REF +2.5V OUT	6-22
40/$\overline{50}$ OUT	6-23
NC	6-24

CN4

+5V IN	4-1
+5V IN	4-2
+7V IN	4-4
+7V IN	4-3
NC	4-5
-5V IN	4-6
-5V IN	4-7
NC	4-8
GND	4-9
GND	4-10

CN7

HTSG IN	7-1
FLD IN	7-2
FD/$\overline{FM}$ OUT	7-3
GND	7-4
DP CTL (VA) IN	7-5
REF +2.5V OUT	7-6
VD IN	7-7
NC	7-8
NC	7-9
NC	7-10
NC	7-11
NC	7-12
HD IN	7-13
NC	7-14
NC	7-15
NC	7-16
SHD GATE IN	7-17
W.C.P. (B) IN	7-18
W.C.P. (G) IN	7-19
W.C.P. (R) IN	7-20
VCO CTL (X) IN	7-21
VCO CTL (G) IN	7-22
SHD OUT	7-23
D.P.CTL IN	7-24
N/$\overline{P}$ OUT	7-25
XPG GATE IN	7-26
DEF (B) IN	7-27
DEF (G) IN	7-28
DEF (R) IN	7-29
SHP GATE IN	7-30

PRE-AMP (SAMPLE&HOLD)

PA-186

BOARD NO. 1-662-317-12
LOT NO. 604-
B-¥DNW7-PA186-X2

DNW-7/90/90WS(SY):S/N 10001 and Higher
DNW-7/90/90WS(J):S/N 30001 and Higher
DNW-7P/90P/90WSP(SY):S/N 40001 and Higher

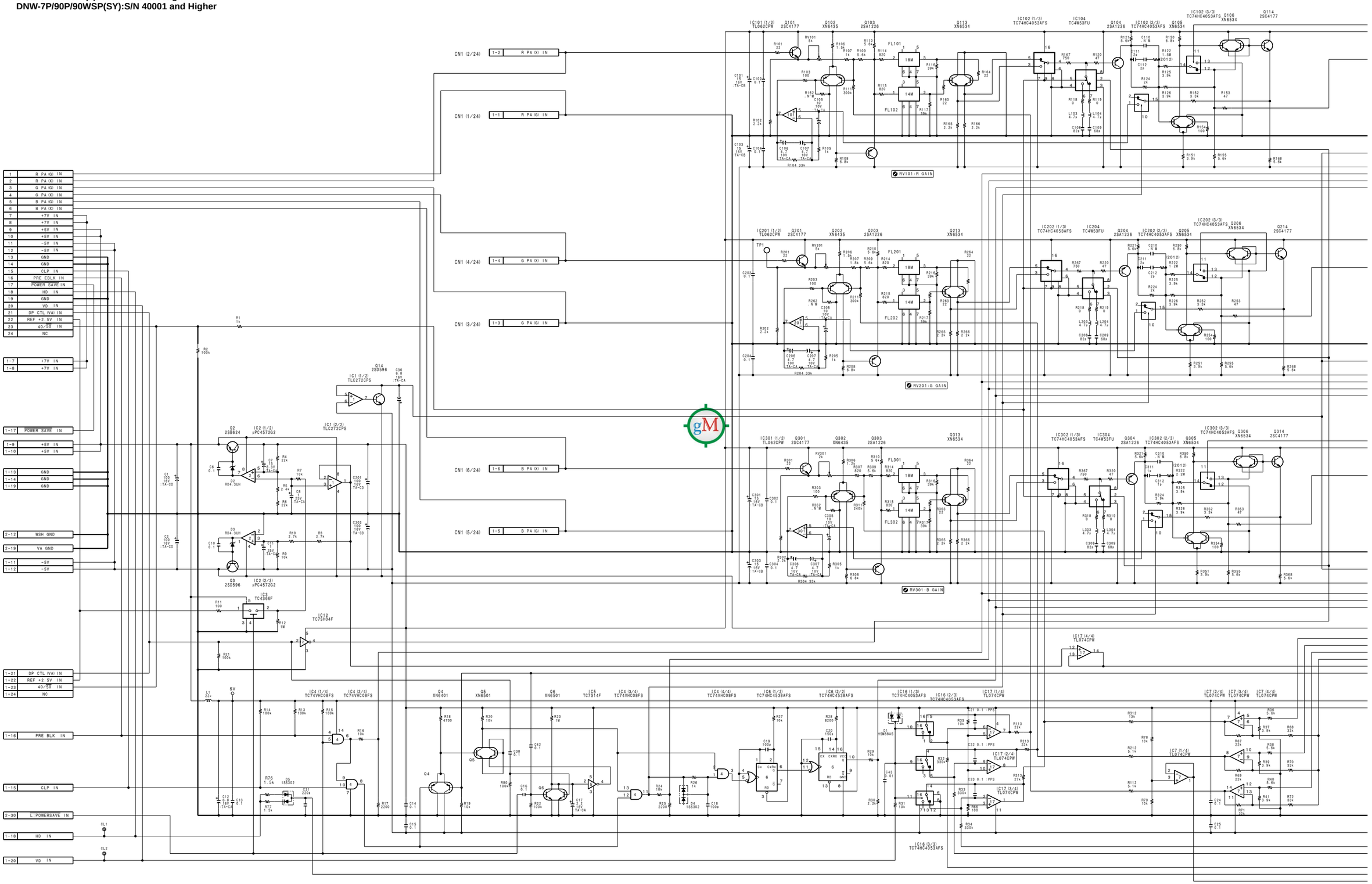

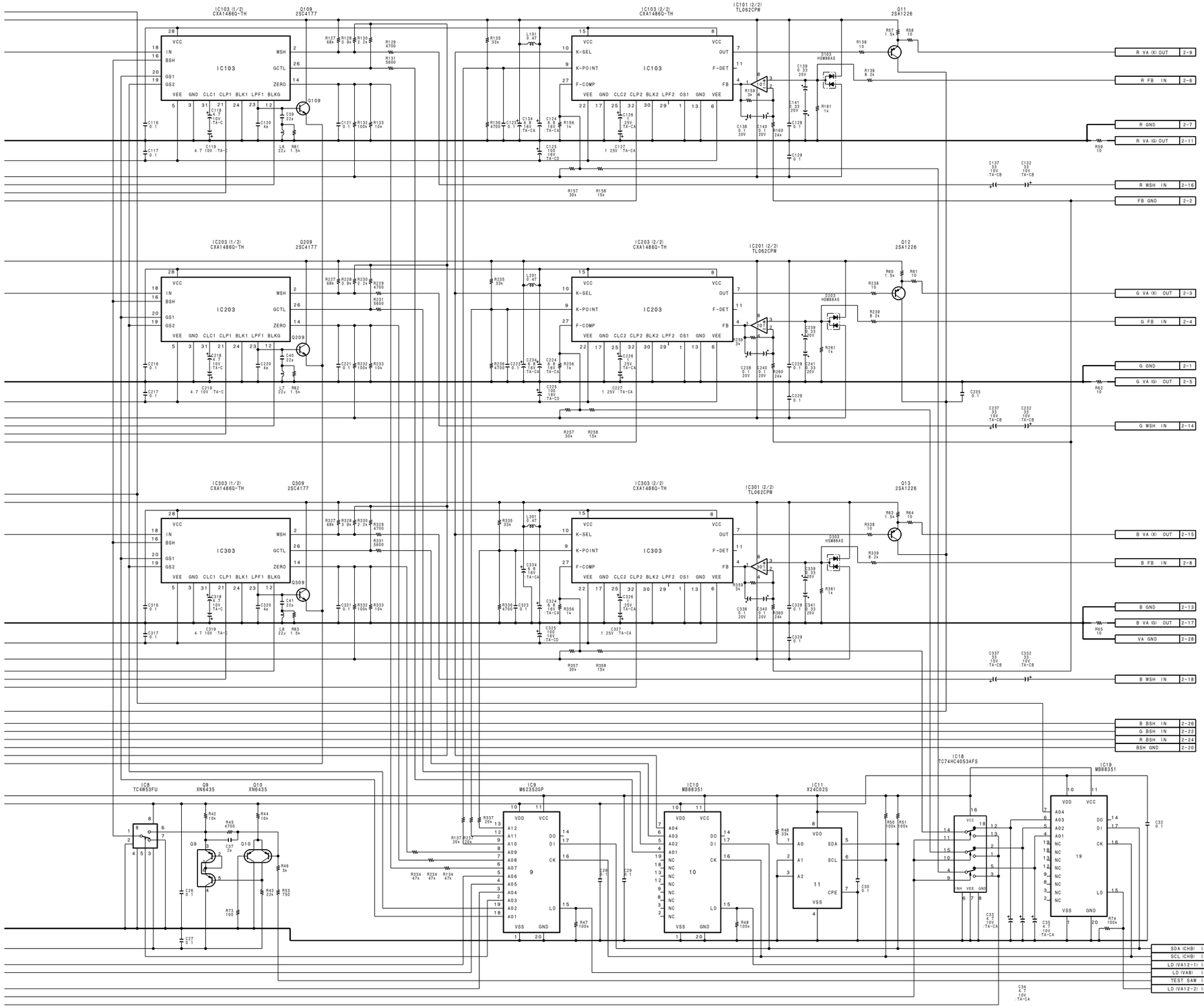

VIDEO AMP
VA-167
BOARD NO. 1-662-318-12
LOT NO. 604-
B-¥DNW7-VA167-X2

DNW-7(SY):S/N 10001 and Higher
DNW-7(J):S/N 30001 and Higher
DNW-7P(SY):S/N 40001 and Higher

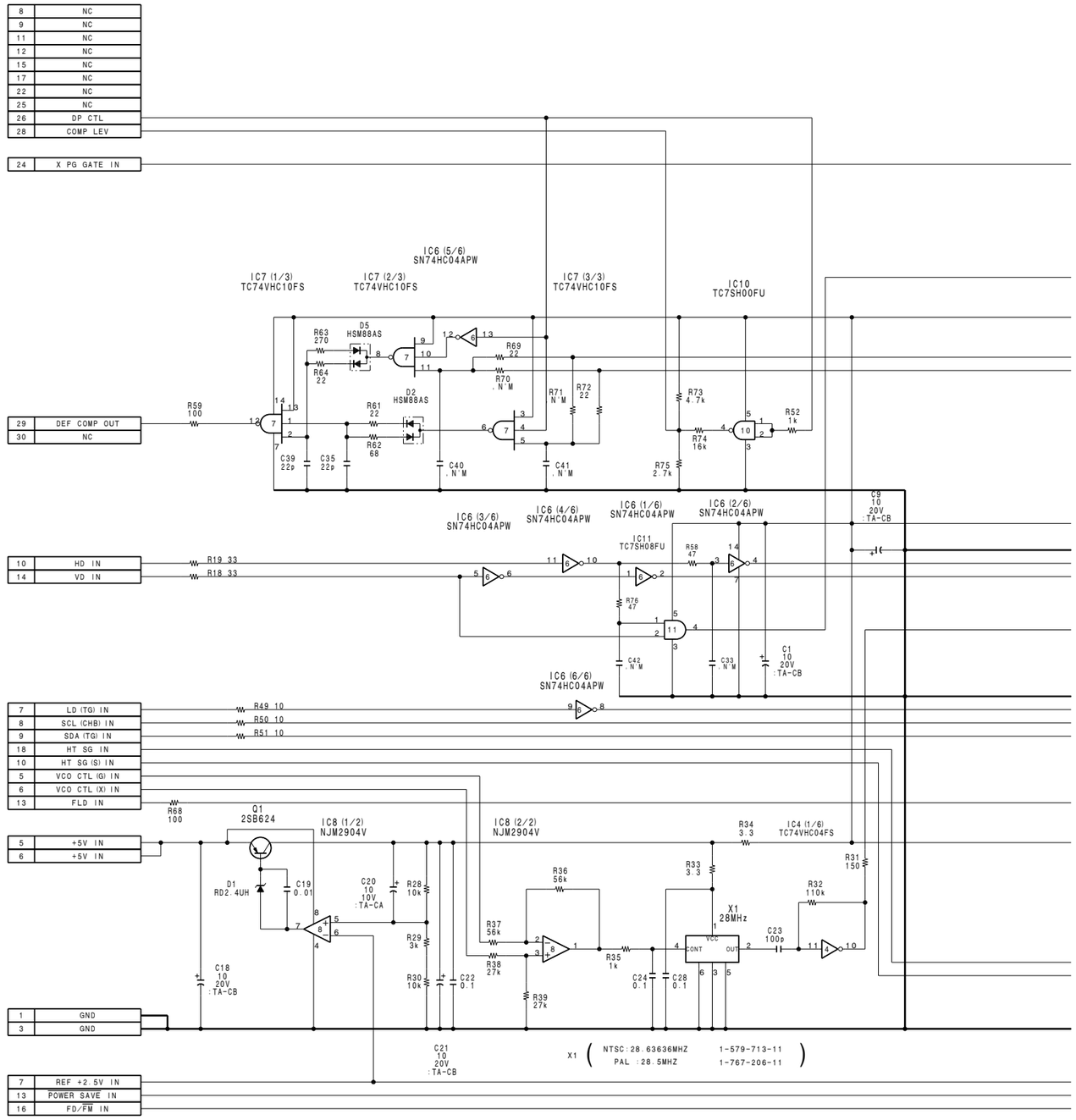

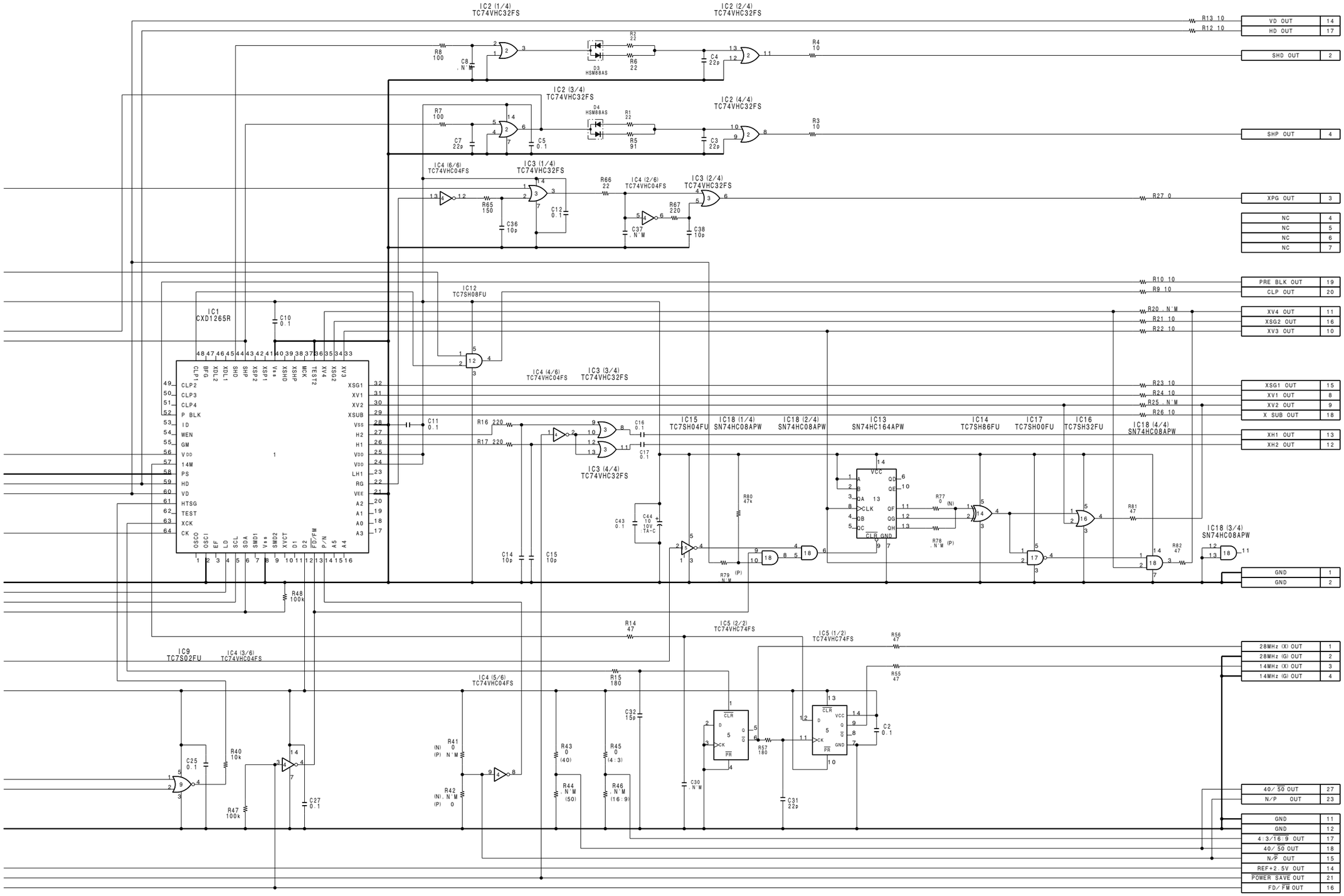

TIMING GENERATOR
TG-161
BOARD NO. 1-662-319-11,12
LOT NO. 604-
B-¥DNW7-TG161-x2

1

2

3

4

5

5-128 5-128

A B C D E F G H

http://getMANUAL.com

This page will be available as a supplement.

DNV-5(SY):S/N 10001 and Higher
DNV-5(J):S/N 30001 and Higher

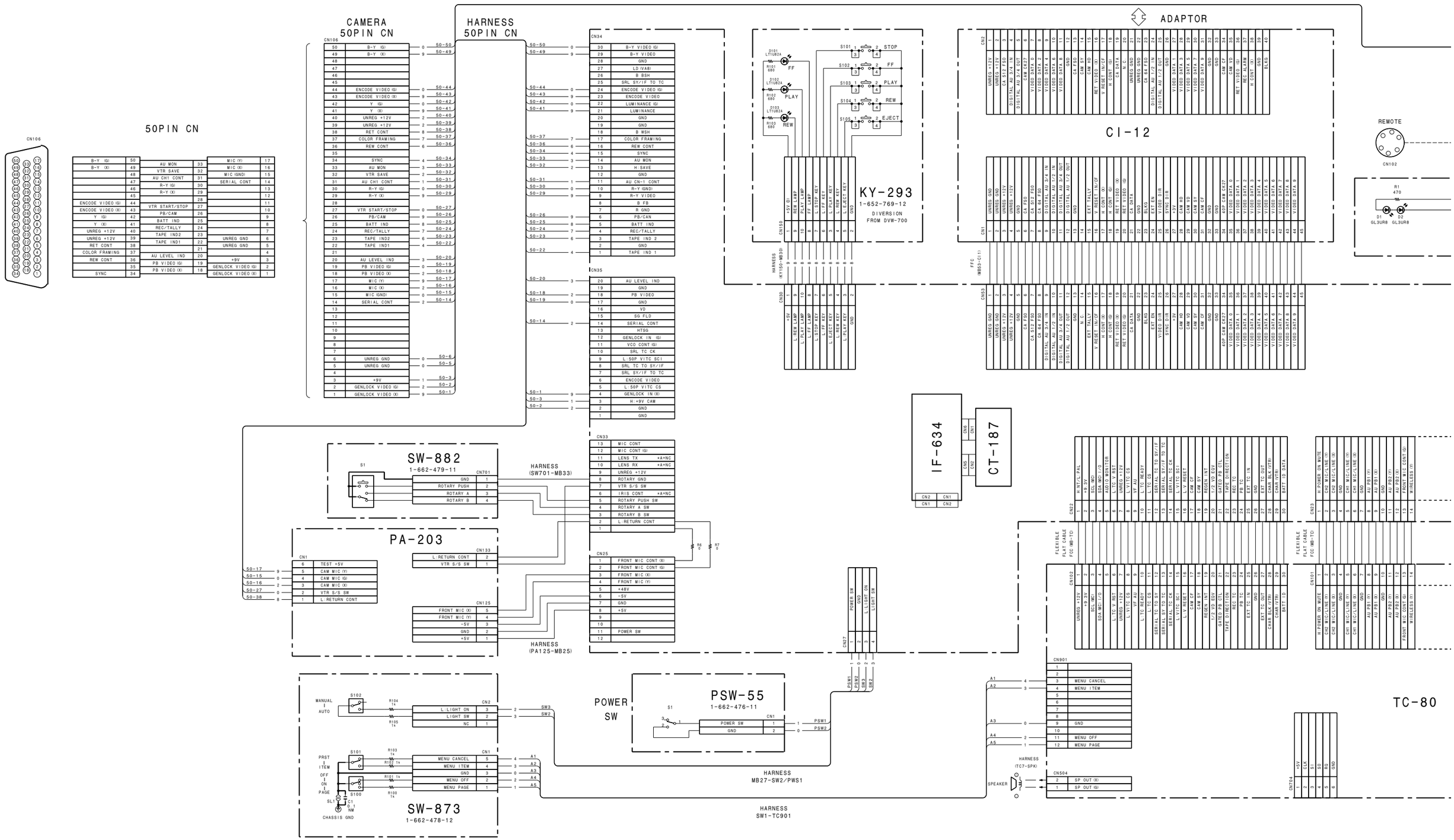

FRAME (1/2) (DNV-5)

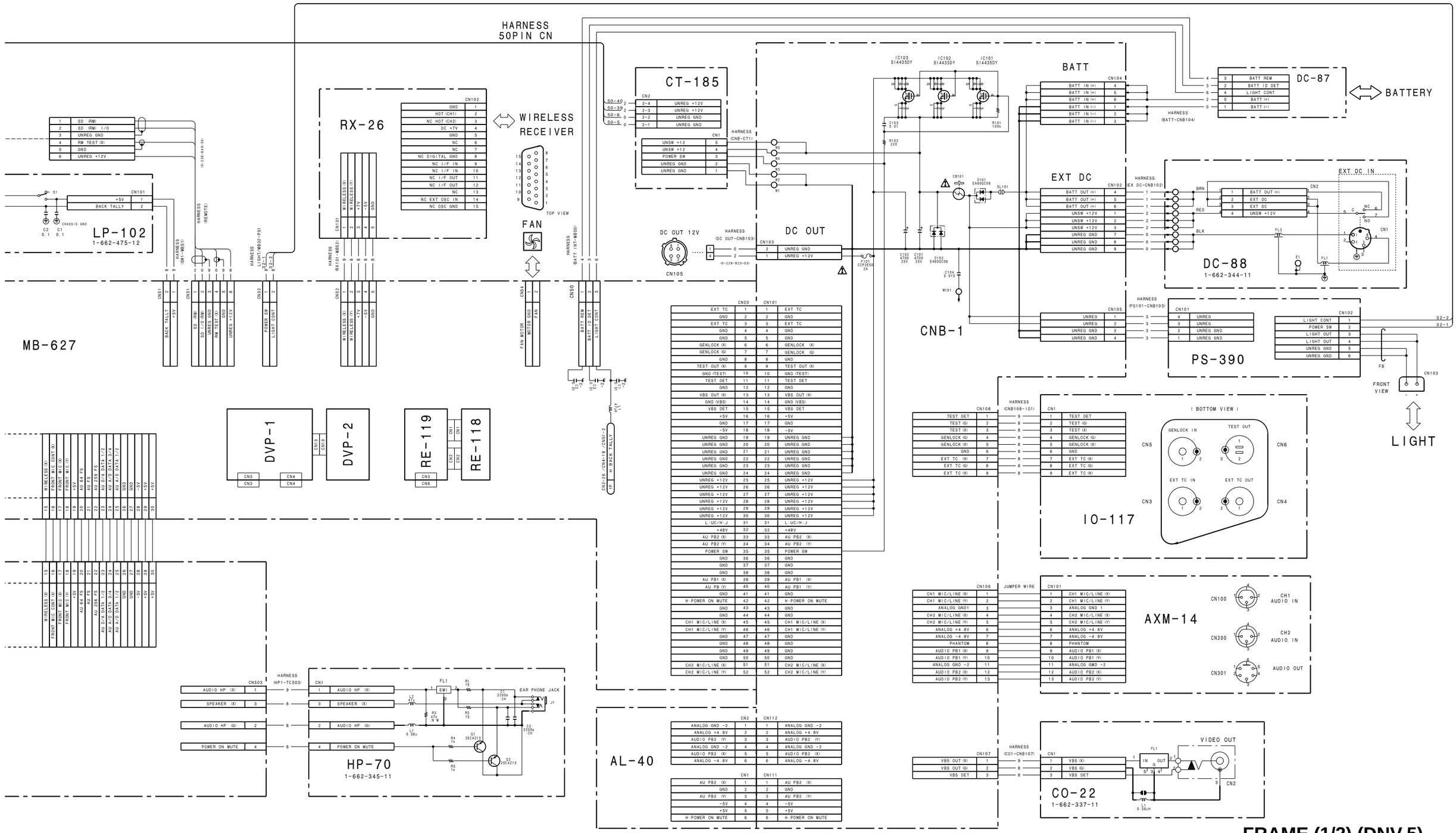

FRAME (2/2) (DNV-5)

DNV-5(SY):S/N 10001 and Higher
DNV-5(J):S/N 30001 and Higher

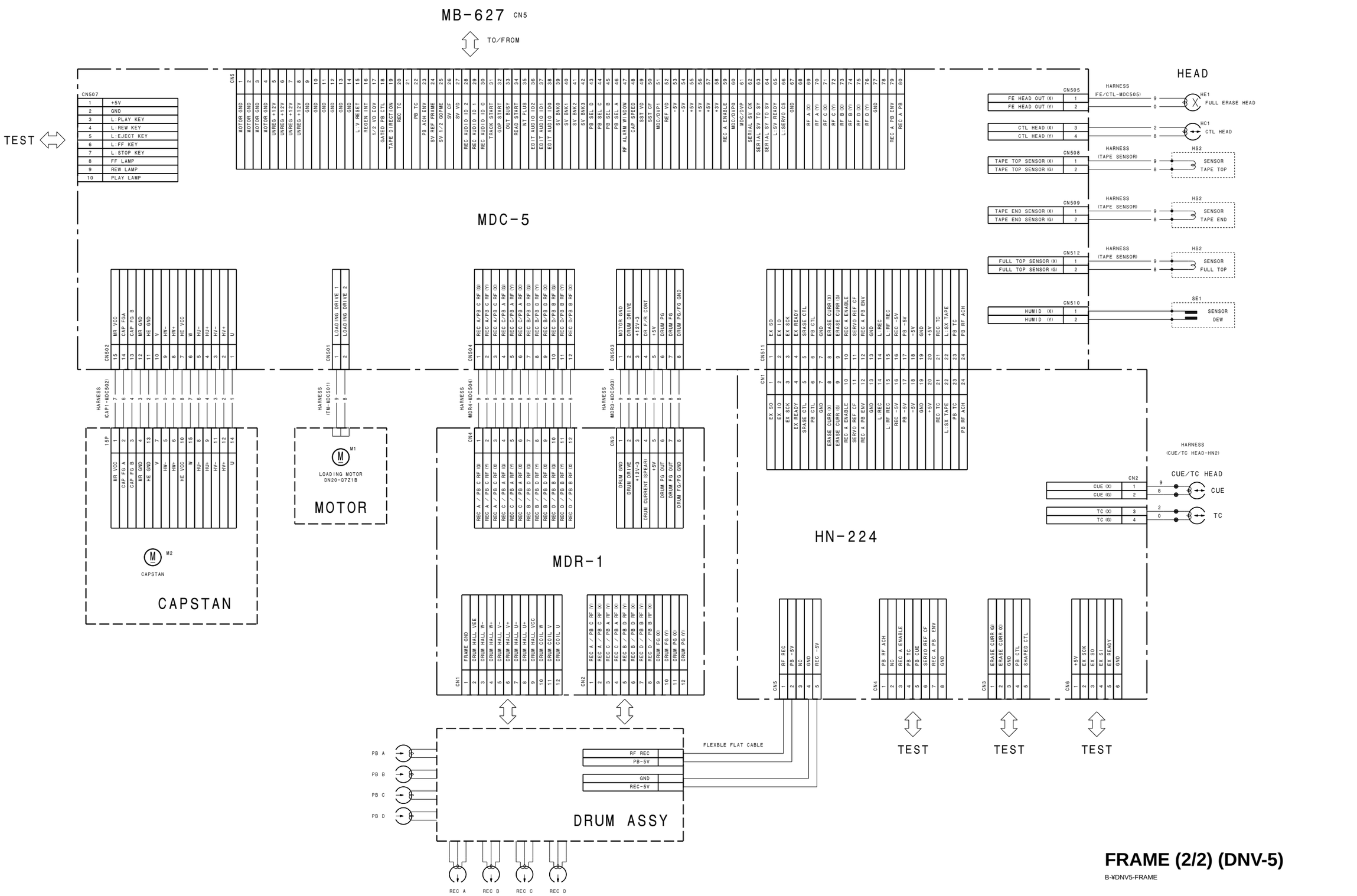

FRAME (2/2) (DNV-5)

B-¥DNV5-FRAME

5-132

FRAME (1/3) (DNW-7)

DNW-7(SY):S/N 10001 and Higher
DNW-7(J):S/N 30001 and Higher
DNW-7P(SY):S/N 40001 and Higher

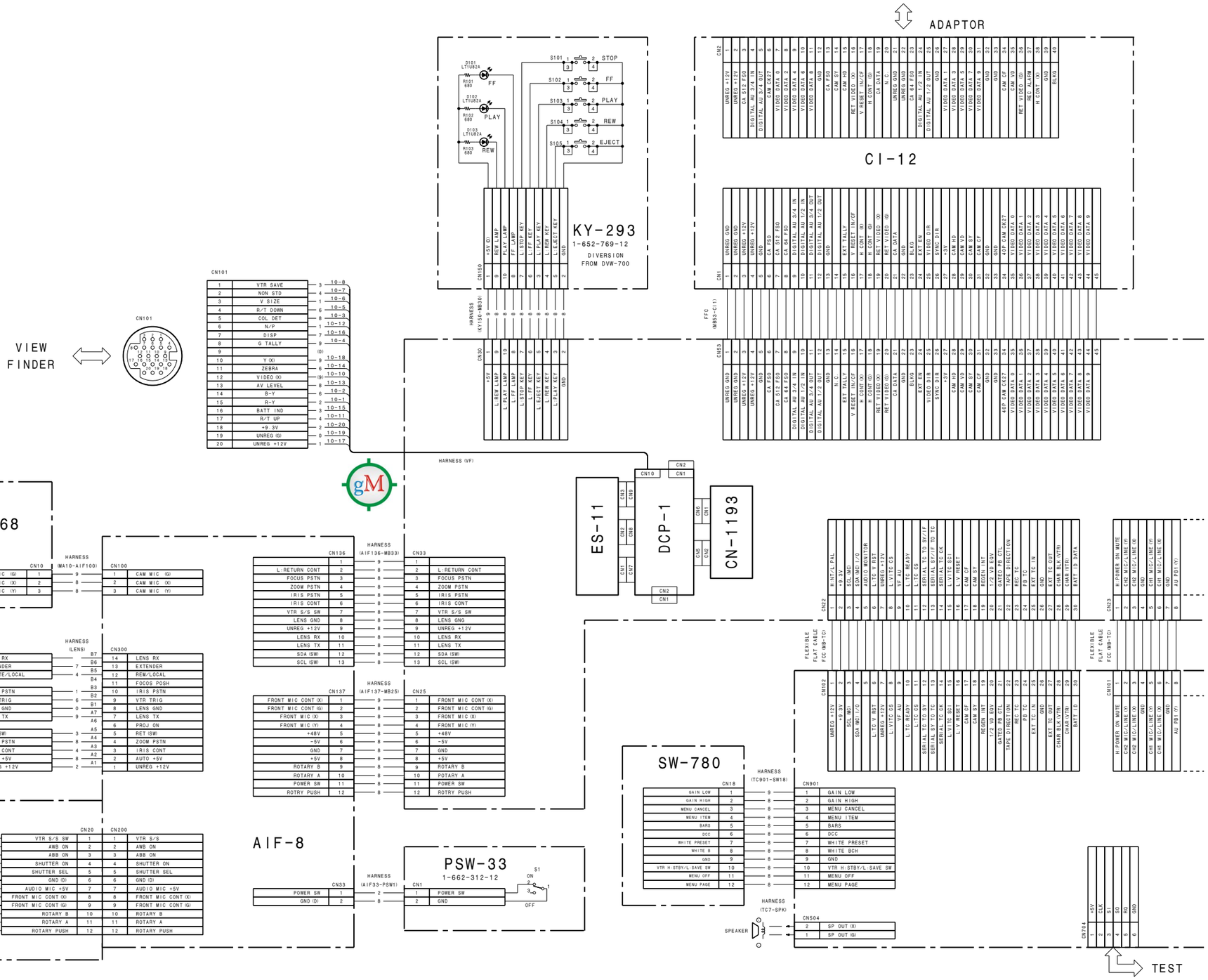

5-134

FRAME (1/3) (DNW-7)

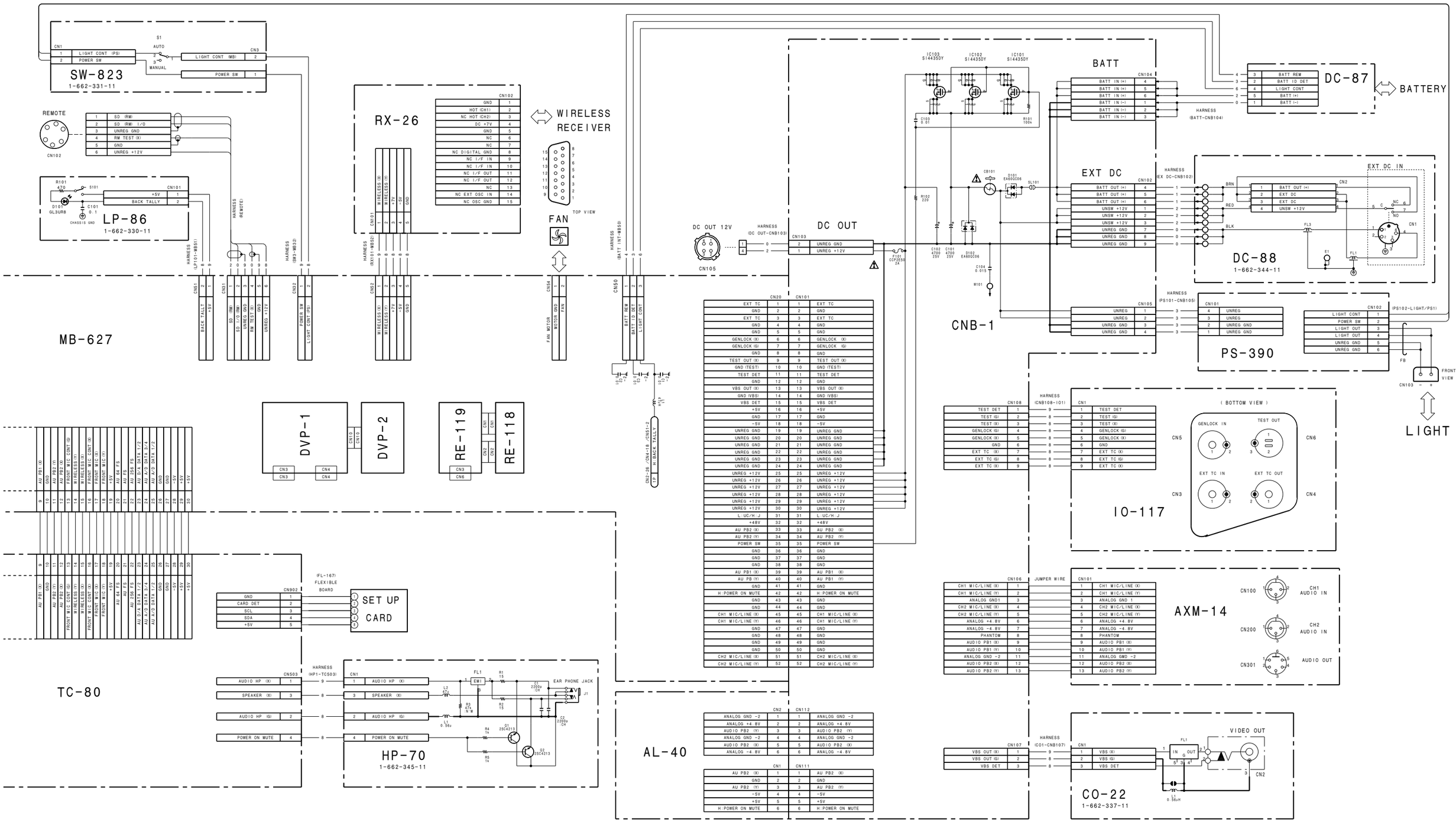

FRAME (1/3) (DNW-7)

B-¥DNW7-FRAME

DNW-7(SY):S/N 10001 and Higher
DNW-7(J):S/N 30001 and Higher
DNW-7P(SY):S/N 40001 and Higher

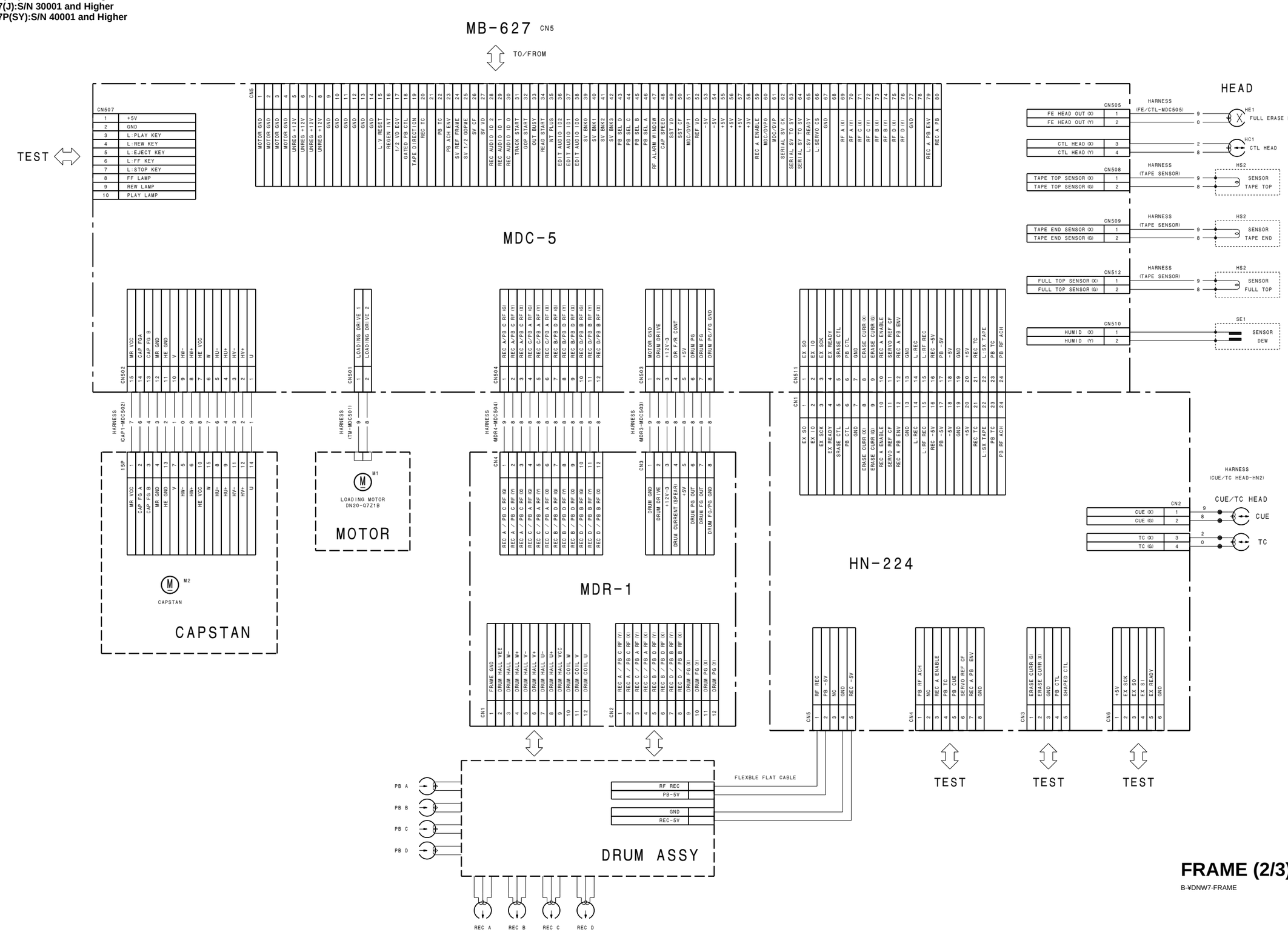

FRAME (2/3) (DNW-7)

B-¥DNW7-FRAME

FRAME (3/3) (DNW-7)

DNW-7(SY):S/N 10001 and Higher
DNW-7(J):S/N 30001 and Higher
DNW-7P(SY):S/N 40001 and Higher

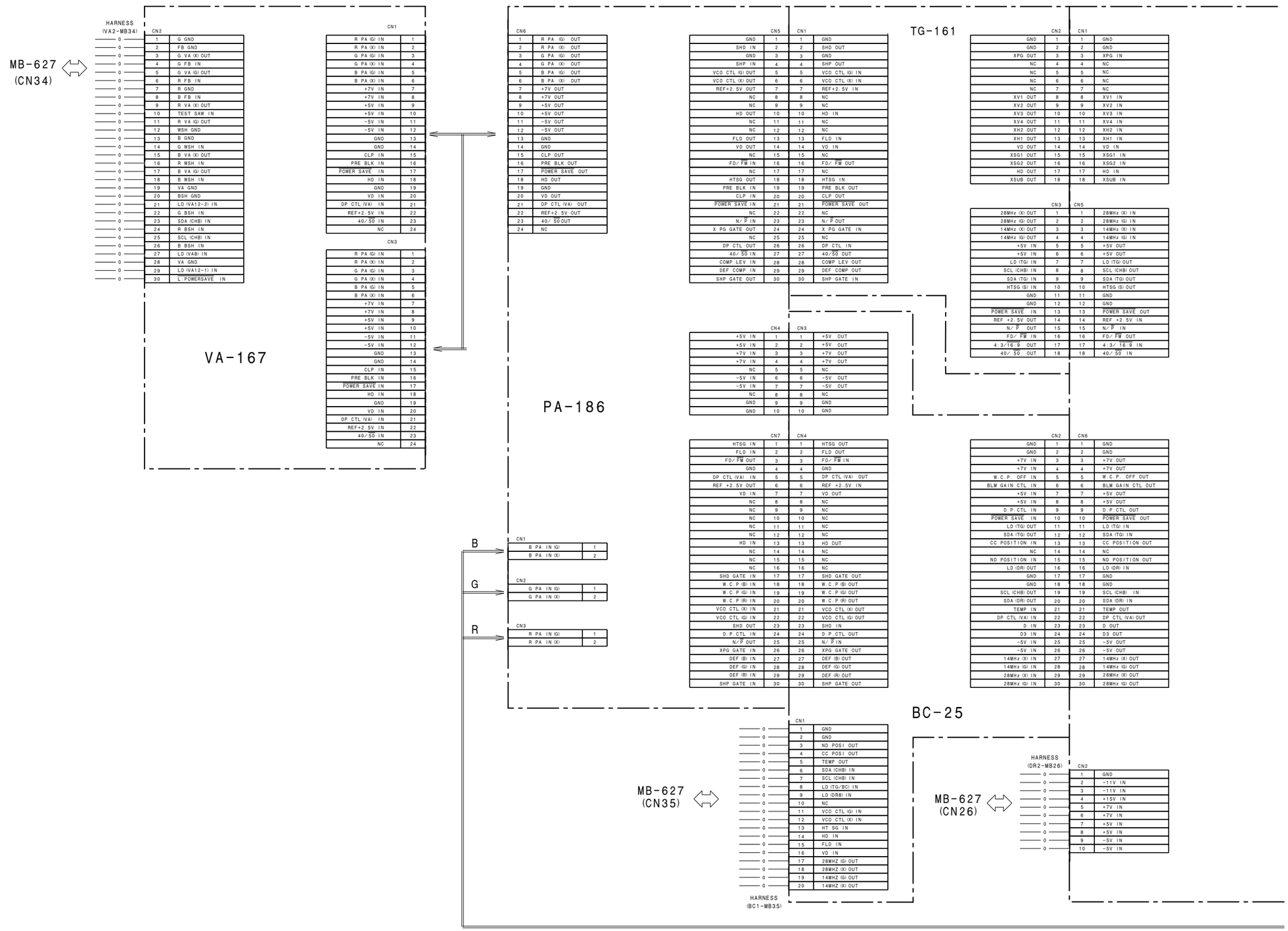

5-138

http://getMANUAL.com

FRAME (3/3) (DNW-7)

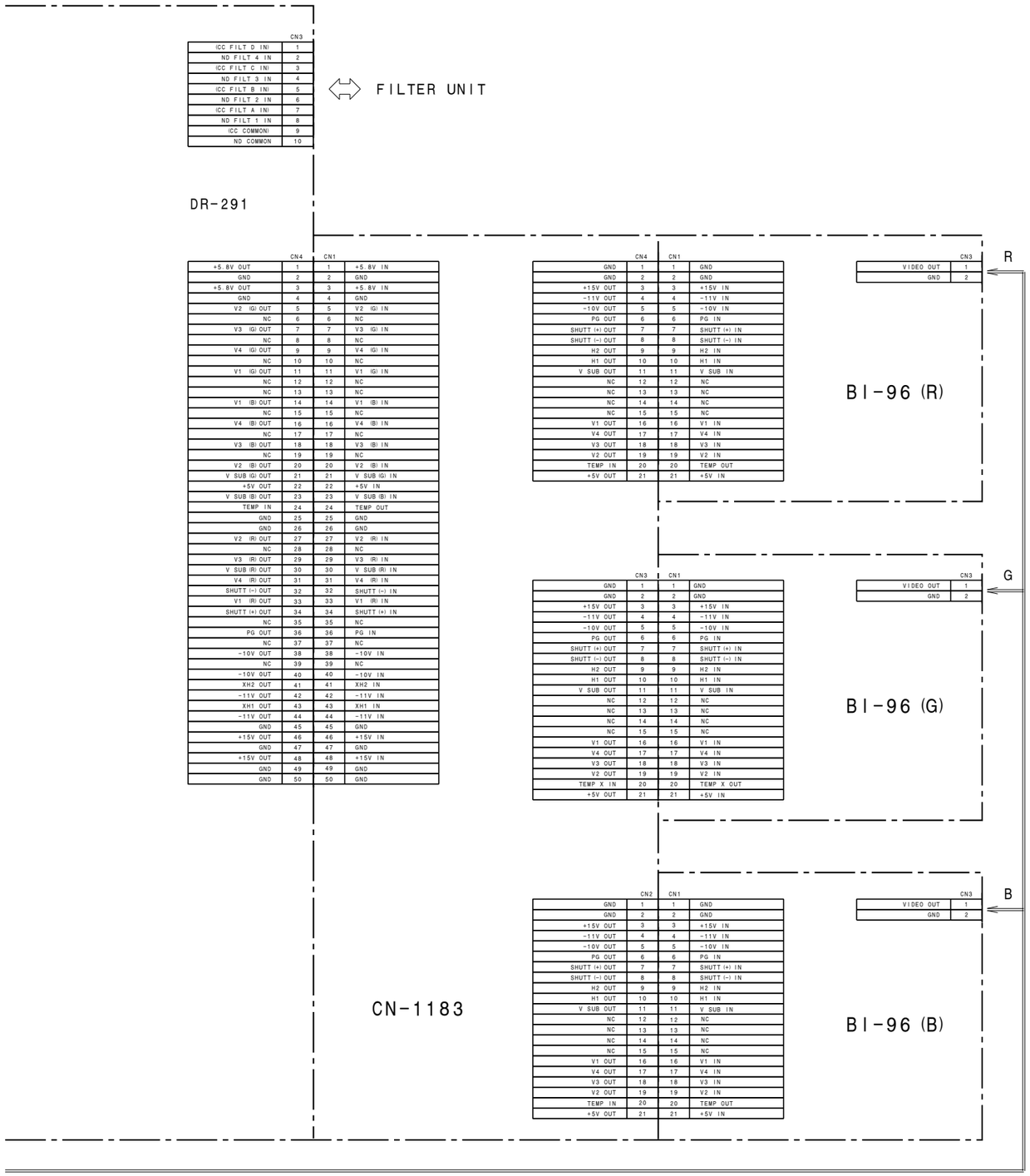

FRAME (3/3) (DNW-7)

B-¥DNW7-FRAME

このマニュアルに記載されている事柄の著作権は当社にあり，説明内容は機器購入者の使用を目的としています。
従って，当社の許可なしに無断で複写したり，説明内容(操作，保守等)と異なる目的で本マニュアルを使用することを禁止します。

The material contained in this manual consists of information that is the property of Sony Corporation and is intended solely for use by the purchasers of the equipment described in this manual.
Sony Corporation expressly prohibits the duplication of any portion of this manual or the use thereof for any purpose other than the operation or maintenance of the equipment described in this manual without the express written permission of Sony Corporation.

Le matériel contenu dans ce manuel consiste en informations qui sont la propriété de Sony Corporation et sont destinées exclusivement à l’usage des acquéreurs de l’équipement décrit dans ce manuel.
Sony Corporation interdit formellement la copie de quelque partie que ce soit de ce manuel ou son emploi pour tout autre but que des opérations ou entretiens de l’équipement à moins d’une permission écrite de Sony Corporation.

Das in dieser Anleitung enthaltene Material besteht aus Informationen, die Eigentum der Sony Corporation sind, und ausschließlich zum Gebrauch durch den Käufer der in dieser Anleitung beschriebenen Ausrüstung bestimmt sind.
Die Sony Corporation untersagt ausdrücklich die Vervielfältigung jeglicher Teile dieser Anleitung oder den Gebrauch derselben für irgendeinen anderen Zweck als die Bedienung oder Wartung der in dieser Anleitung beschriebenen Ausrüstung ohne ausdrückliche schriftliche Erlaubnis der Sony Corporation.

DNW-90WSP (SY)
DNW-90WS (J, SY)
DNW-90P (SY)
DNW-90 (J, SY)
DNW-7P (SY)
DNW-7 (J, SY)
DNV-5 (J, SY) J, E
9-967-681-01

Sony Corporation
Broadcast Products Company

Printed in Japan
1996. 12 08
©1996
Published by Broadcast Products Company